Bits, Bytes, and Integers – Part 2

15-213: Introduction to Computer Systems
3rd Lecture, Sept. 5, 2017

Today's Instructor:

Randy Bryant

Today: Bits, Bytes, and Integers

- Representing information as bits
- Bit-level manipulations
- **Integers**
  - Representation: unsigned and signed
  - Conversion, casting
  - Expanding, truncating
  - **Addition, negation, multiplication, shifting**
- Representations in memory, pointers, strings
- Summary

数据的运算

- 高级语言程序中涉及的运算（以C语言为例）
  - 整数算术运算
  - 按位、逻辑、移位、位扩展和位截断
- 指令集中涉及到的运算
  - 涉及到的定点数运算
    - 算术运算
      - 带符号整数运算：取负 / 符号扩展 / 算术移位/ 加 / 减 / 乘 / 除
      - 无符号整数运算：0扩展 / 加 / 减 / 乘 / 除
    - 逻辑运算
      - 逻辑操作：与 / 或 / 非 / ...
      - 移位操作：逻辑左移 / 逻辑右移

Unsigned Addition

Operands: *w* bits

True Sum: *w*+1 bits

Discard Carry: *w* bits

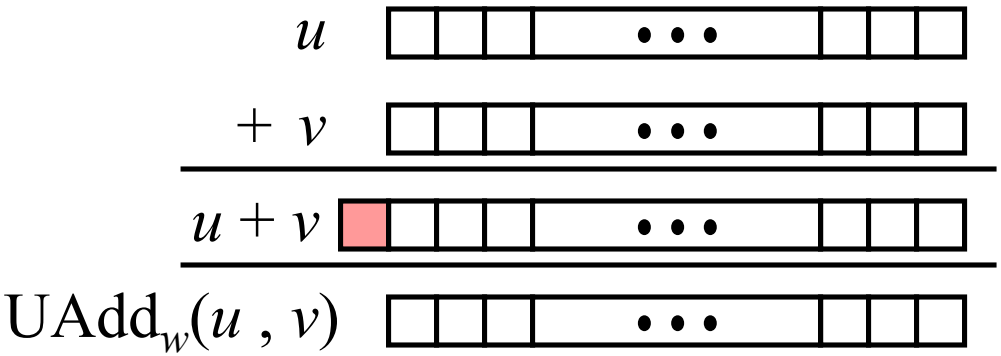

- **Standard Addition Function**
  - Ignores carry output
- **Implements Modular Arithmetic**

$$s \quad = \quad \mathrm{UAdd}_w(u\ ,\ v) \quad = \quad u + v \mod 2^w$$

```
unsigned char     1110 1001      E9      223
                + 1101 0101    + D5    + 213
                  1 1011 1110    1BE     446
                  1011 1110      BE      190
```

Hex	Decimal	Binary
0	0	0000
1	1	0001
2	2	0010
3	3	0011
4	4	0100
5	5	0101
6	6	0110
7	7	0111
8	8	1000
9	9	1001
A	10	1010
B	11	1011
C	12	1100
D	13	1101
E	14	1110
F	15	1111

Two's Complement Addition

Operands: *w* bits

True Sum: *w*+1 bits

Discard Carry: *w* bits

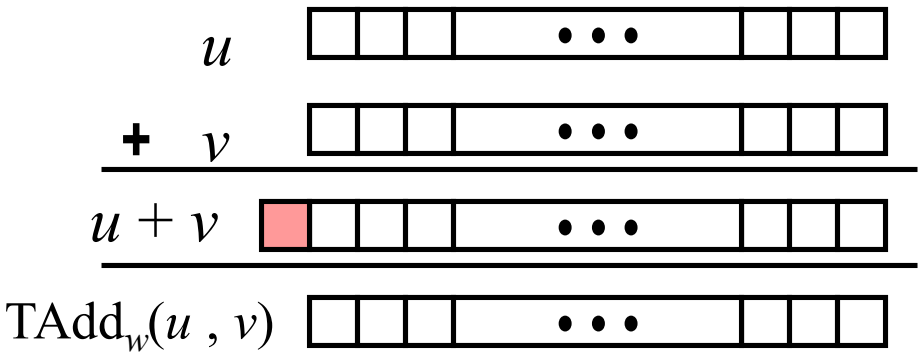

- **TAdd and UAdd have Identical Bit-Level Behavior**
  - Signed vs. unsigned addition in C:

```
int s, t, u, v;
s = (int) ((unsigned) u + (unsigned) v);
t = u + v
```

  - Will give `s == t`

	1110 1001	E9	-23
+	1101 0101	+ D5	+ -43
1	1011 1110	1BE	446
	1011 1110	BE	-66

TAdd Overflow

- **Functionality**
  - True sum requires *w*+1 bits
  - Drop off MSB
  - Treat remaining bits as 2's comp. integer

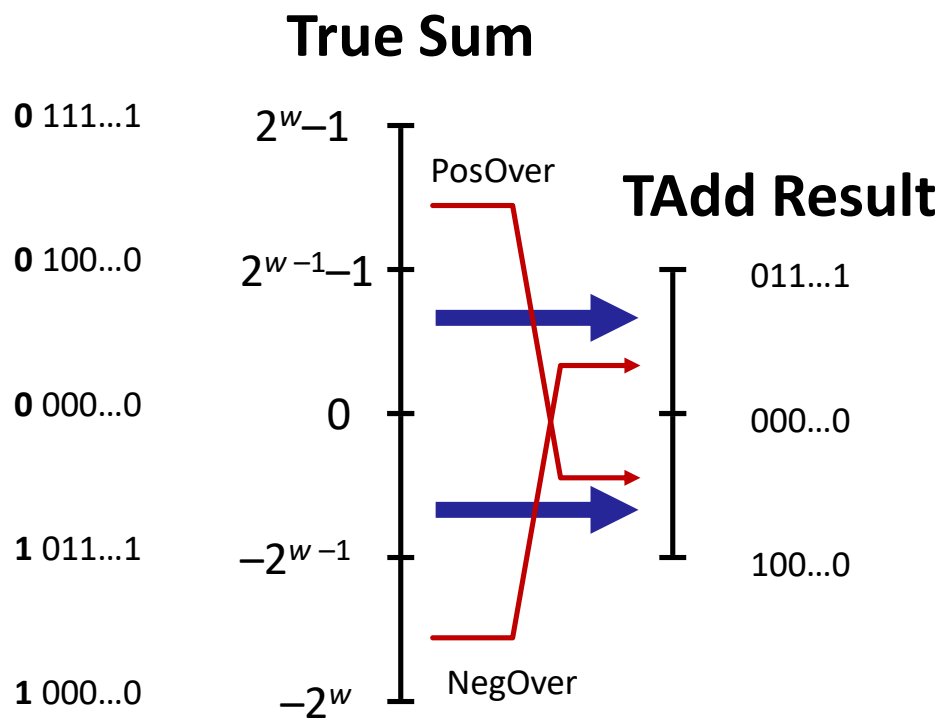

整数加减运算及其部件

- 补码加减运算公式
  - $[A+B]_{补} = [A]_{补} + [B]_{补}$ (MOD 2^n)
  - $[A-B]_{补} = [A]_{补} + [-B]_{补}$ (MOD 2^n)

问题：Adder中执行的是什么运算？

相当于无符号数加！

- 补码加减运算要点和运算部件
  - 加、减法运算统一采用加法来处理
  - 符号位(最高有效位MSB)和数值位一起参与运算
  - 直接用Adder实现两个数的加运算（模运算系统）

    问题：模是多少？运算结果高位丢弃，保留低n位，相当于取模2^n
  - 实现减法的主要工作在于：求$[-B]_{补}$

问题：如何求$[-B]_{补}$？

$[-B]_{补}=\overline{B}+1$

当Sub为1时，做减法
当Sub为0时，做加法

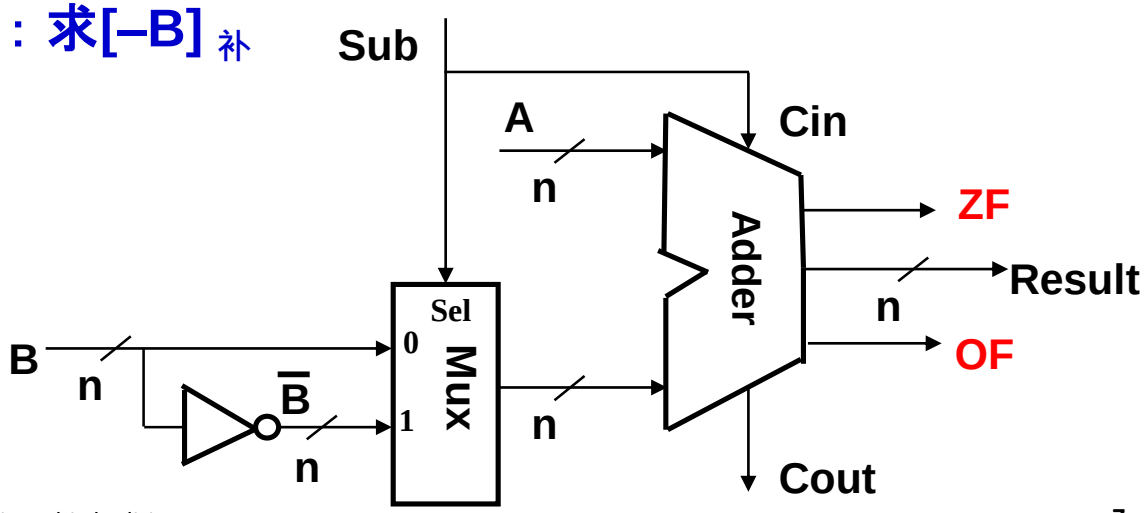

重要认识1：计算机中所有运算都基于加法器实现！

重要认识2：加法器不知道所运算的是带符号数还是无符号数。

重要认识3：加法器不判定对错，总是取低n位作为结果，并生成标志信息。

当Sub为1时， 做减法
当Sub为0时， 做加法

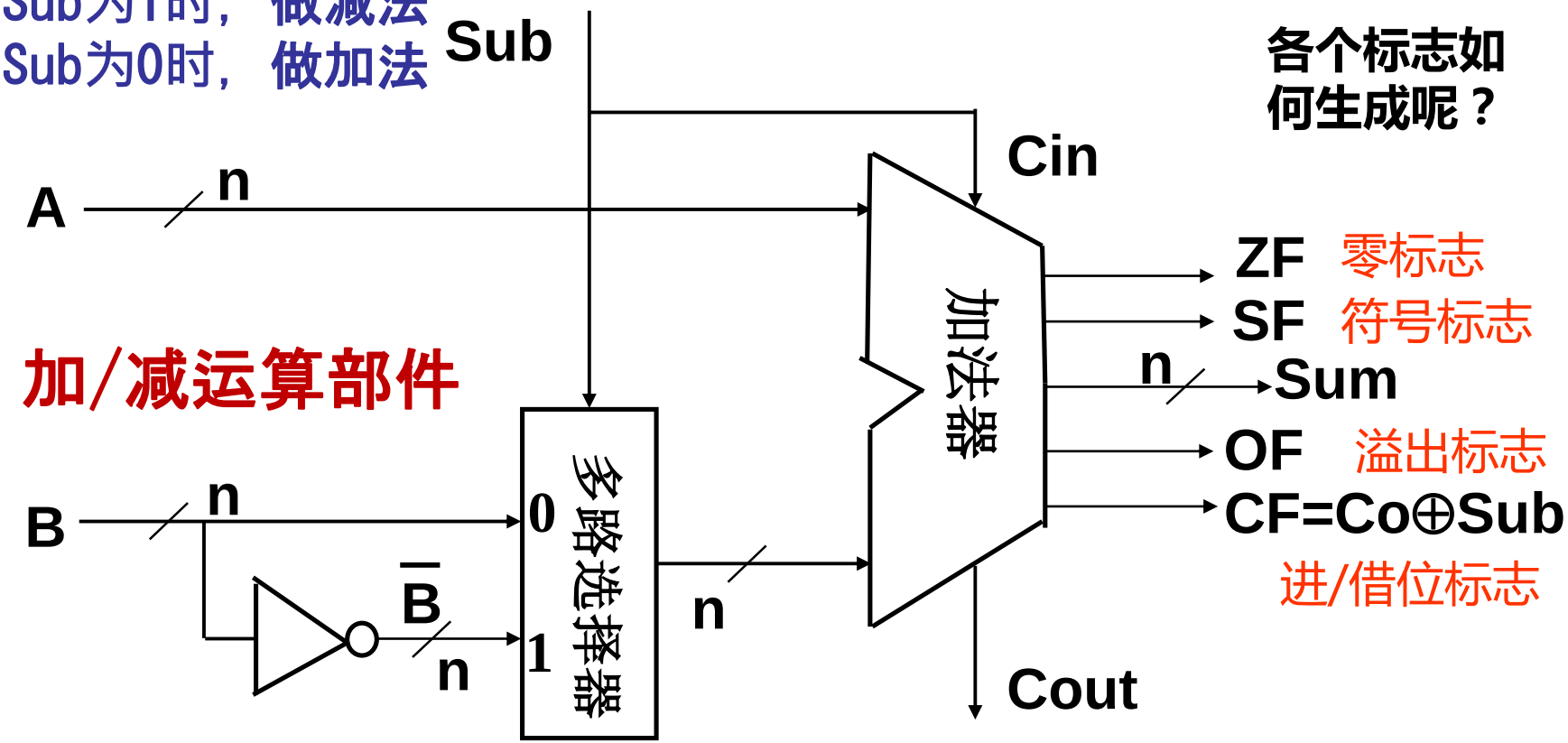

各个标志如何生成呢？

加/减运算部件

条件标志位（条件码CC）

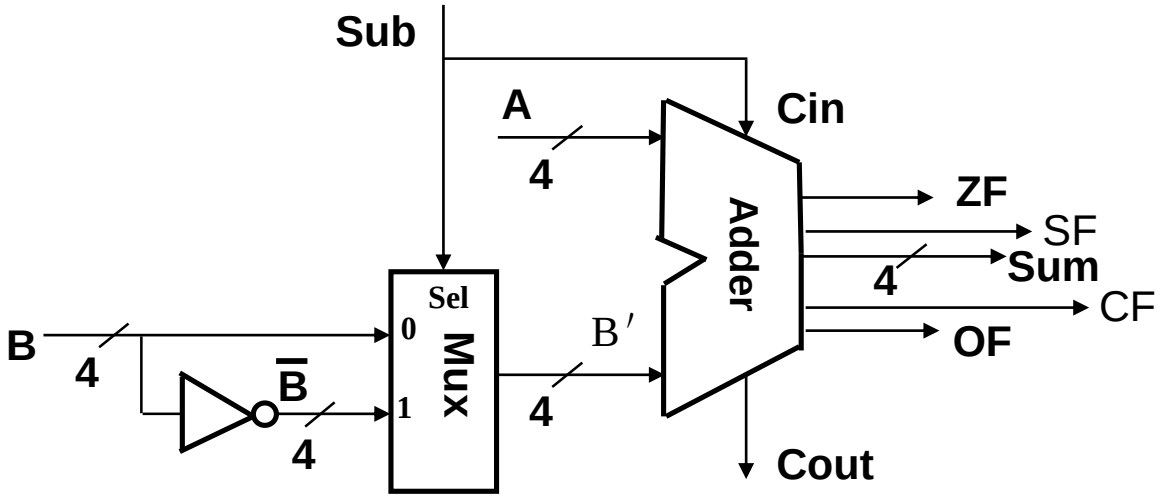

所有其他运算都基于整数加/减运算器来实现。

整数加/减运算部件

问题：OF=？ ZF=？ SF=？ CF=？

OF：若A与B’同号但与Sum不同号，则1；否则0。SF：sum符号
ZF：如Sum为0，则1，否则0。CF：Cout ⊕ sub

- **零标志ZF、溢出标志OF、进/借位标志CF、符号标志SF称为条件标志。**
- **条件标志（Flag）在运算电路中产生，被记录到专门的寄存器中，以便在分支指令中被用来作为条件。**
- **存放标志的寄存器通常称为程序/状态字寄存器或标志寄存器。每个标志对应标志寄存器中的一个标志位。 如，IA-32中的EFLAGS寄存器**

整数加减运算及其部件

无符号数加减运算也用该部件执行

```
unsigned int x=134;
unsigned int y=246;
int m=x;
int n=y;
unsigned int z1=x-y;
unsigned int z2=x+y;
int k1=m-n;
int k2=m+n;
```

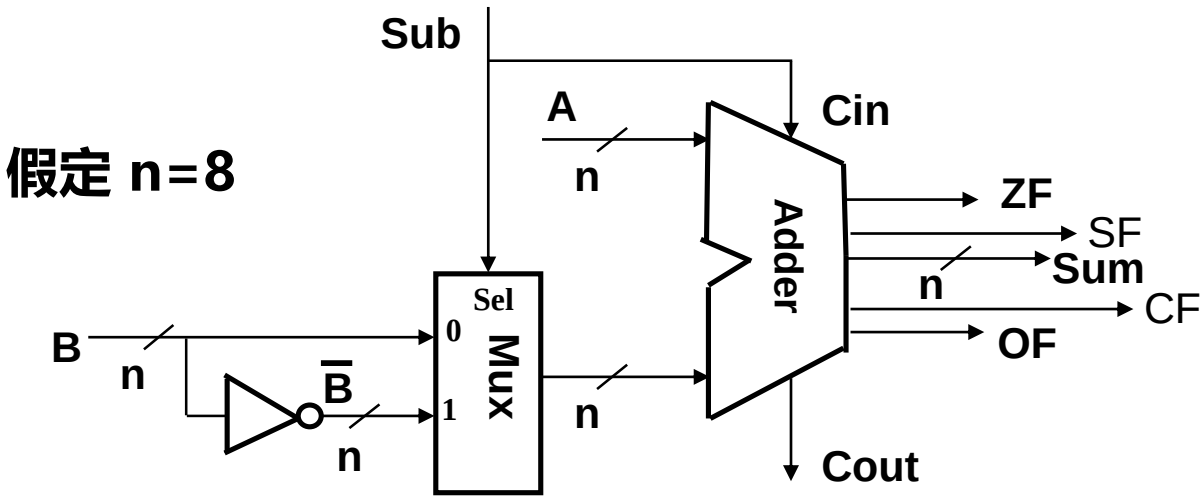

x和m的机器数一样：1000 0110，y和n的机器数一样：1111 0110

z1和k1的机器数一样：1001 0000，CF=1，OF=0，SF=1

z1的值为144（=134-246+256，x-y<0），k1的值为-112。

z2和k2的机器数一样：0111 1100，CF=1，OF=1，SF=0

z2的值为124（=134+246-256，x+y>256）

k2的值为124（=134+246-256，x+y>128，即正溢出）

结果说明什么？

仅k1的值正确！

Multiplication

- **Goal: Computing Product of *w*-bit numbers *x*, *y***
  - Either signed or unsigned
- **But, exact results can be bigger than *w* bits**
  - Unsigned: up to 2*w* bits
    - Result range: $0 \le x * y \le (2^w - 1)^2 = 2^{2w} - 2^{w+1} + 1$
  - Two's complement min (negative): Up to 2*w*-1 bits
    - Result range: $x * y \ge (-2^{w-1})*(2^{w-1}-1) = -2^{2w-2} + 2^{w-1}$
  - Two's complement max (positive): Up to 2*w* bits, but only for $(TMin_w)^2$
    - Result range: $x * y \le (-2^{w-1})^2 = 2^{2w-2}$
- **So, maintaining exact results…**
  - would need to keep expanding word size with each product computed
  - is done in software, if needed
    - e.g., by "arbitrary precision" arithmetic packages

Unsigned Multiplication in C

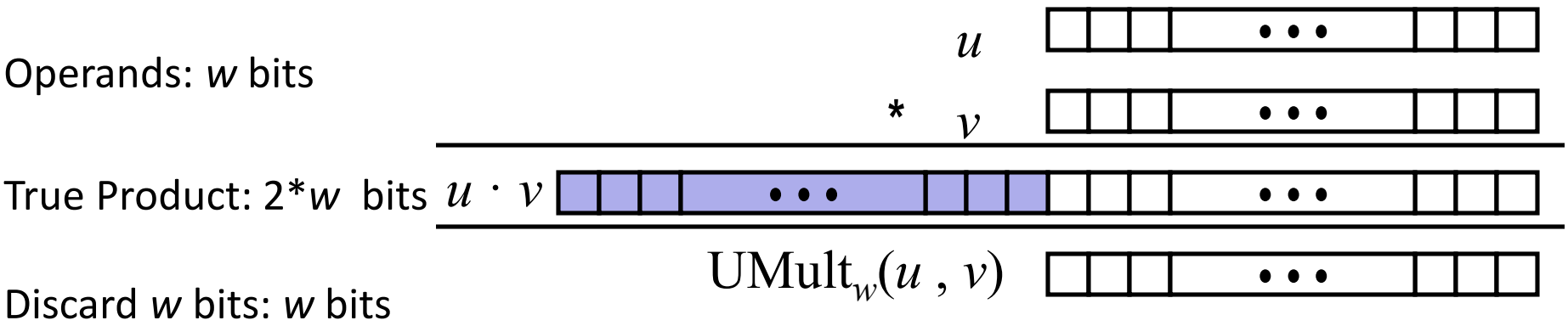

- **Standard Multiplication Function**
  - Ignores high order *w* bits
- **Implements Modular Arithmetic**

  $\text{UMult}_w(u, v) = u \cdot v \bmod 2^w$

```
                1110 1001      E9      223
*               1101 0101   *  D5   *  213
 1100 0001 1101 1101          C1DD    47499
                1101 1101      DD      221
```

Signed Multiplication in C

Operands: *w* bits

True Product: 2**w* bits

Discard *w* bits: *w* bits

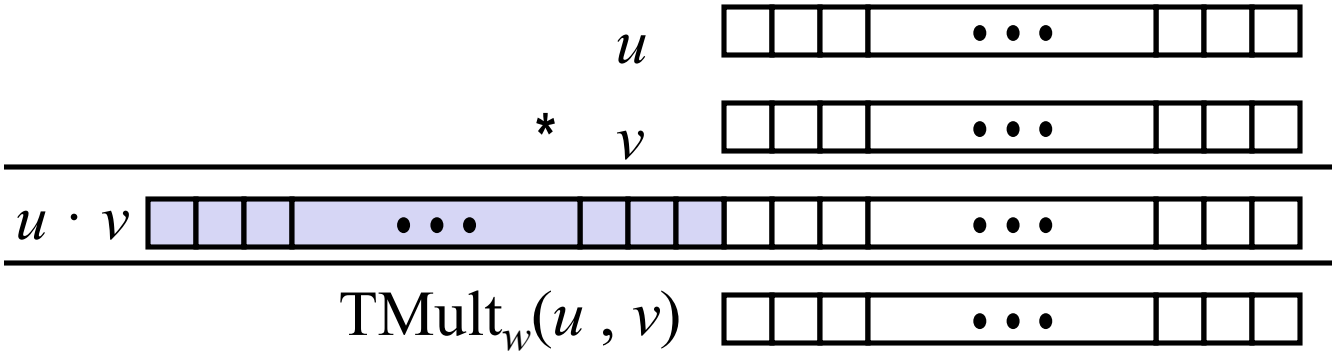

- **Standard Multiplication Function**
  - Ignores high order *w* bits
  - Some of which are different for signed vs. unsigned multiplication
  - Lower bits are the same

```
                1110 1001      E9      -23
*               1101 0101   *  D5   *  -43
 0000 0011      1101 1101     03DD     989
                1101 1101      DD      -35
```

整数的乘运算

- 高级语言中两个n位整数相乘得到的结果通常也是一个n位整数，也即结果只取2n位乘积中的低n位。
- 例如，在C语言中，参加运算的两个操作数的类型和结果的类型必须一致，如果不一致则会先转换为一致的数据类型再进行计算。

$x^2 \geq 0$?

对于带符号整数，不一定！

例如，当n=4时, $5^2=-7<0$!

整数溢出漏洞

- 说明以下程序存在什么漏洞，引起该漏洞的原因是什么。

```
/* 复制数组到堆中，count为数组元素个数 */
int copy_array(int *array, int count) {
    int i;
    /* 在堆区申请一块内存 */
    int *myarray = (int *) malloc(count*sizeof(int));
    if (myarray == NULL)
        return -1;
    for (i = 0; i < count; i++)
        myarray[i] = array[i];
    return count;
}
```

2002年，Sun Microsystems公司的RPC XDR库带的xdr_array函数发生整数溢出漏洞，攻击者可利用该漏洞从远程或本地获取root权限。

攻击者可构造特殊参数来触发整数溢出，以一段预设信息覆盖一个已分配的堆缓冲区，造成远程服务崩溃或者改变内存数据并执行任意代码。

当参数count很大时，则count*sizeof(int)会溢出。如count=2^{30}+1时，count*sizeof(int)=4。

堆（heap）中大量数据被破坏！

变量与常数之间的乘运算

- 整数乘法运算比移位和加法等运算所用时间长得多，通常一次乘法运算需要10个左右时钟周期，而一次移位、加法和减法等运算只要一个或更少的时钟周期，因此，编译器在处理变量与常数相乘时，往往以移位、加法和减法的组合运算来代替乘法运算。

  例如，对于表达式x*20，编译器可以利用$20=16+4=2^4+2^2$，将x*20转换为(x<<4)+(x<<2)，这样，一次乘法转换成了两次移位和一次加法。

- 不管是无符号数还是带符号整数的乘法，即使乘积溢出时，利用移位和加减运算组合的方式得到的结果都是和采用直接相乘的结果是一样的。

Power-of-2 Multiply with Shift

- **Operation**
  - `u << k` gives `u * 2`^{k}
  - Both signed and unsigned

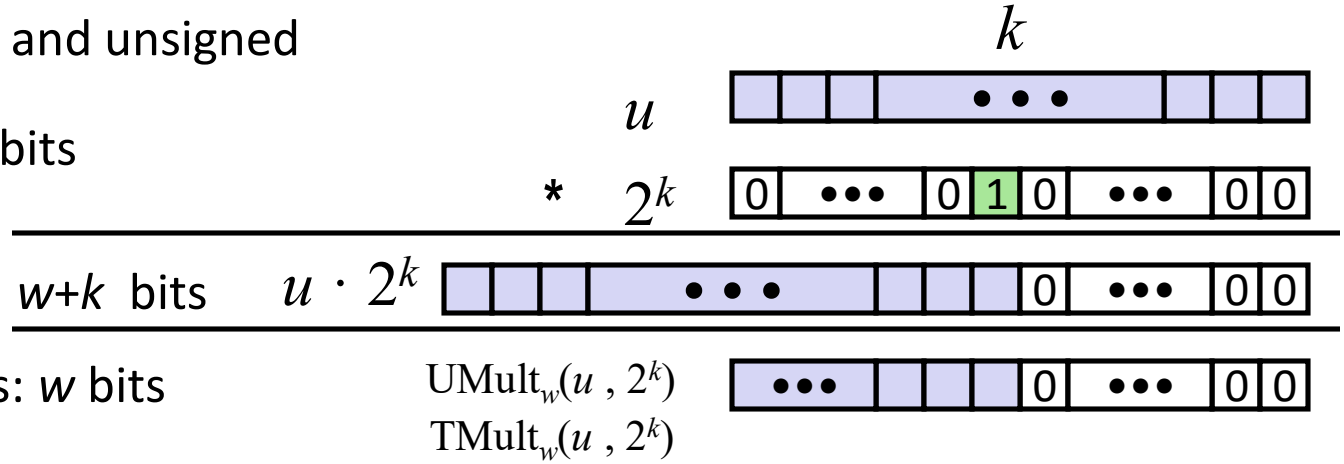

- **Examples**
  - `u << 3 == u * 8`
  - `(u << 5) - (u << 3) == u * 24`
  - Most machines shift and add faster than multiply
    - Compiler generates this code automatically

变量与常数之间的除运算

- 对于整数除法运算，由于计算机中除法运算比较复杂，而且不能用流水线方式实现，所以一次除法运算大致需要30个或更多个时钟周期。为了缩短除法运算的时间，编译器在处理一个变量与一个2的幂次形式的整数相除时，常采用右移运算来实现。
- 无符号数除法采用逻辑右移方式，带符号整数采用算术右移方式。
- 结果一定取整数，能整除时，直接右移得到结果。

  例如，12/4=3：0000 1100>>2=0000 0011

  -12/4=-3：1111 0100 >>2=1111 1101

- 不能整除时，其商采用朝零方向舍入的方式，也就是截断方式，即：移出的低位数直接丢弃。带符号负整数则不对！（需加偏移量(2^k-1)，然后再右移k位 ，低位截断）

  无符号整数：14/4=3：0000 1110>>2=0000 0011

  带符号整数：-14/4=-3：1111 0010 >>2=1111 1100=-4≠-3

  纠偏: k=2, 故$(-14+2^2-1)/4=-3$： 1111 0101>>2=1111 1101=-3

Unsigned Power-of-2 Divide with Shift

- **Quotient of Unsigned by Power of 2**
  - `u >> k` gives $\lfloor$ `u / 2`^{k} $\rfloor$
  - Uses logical shift

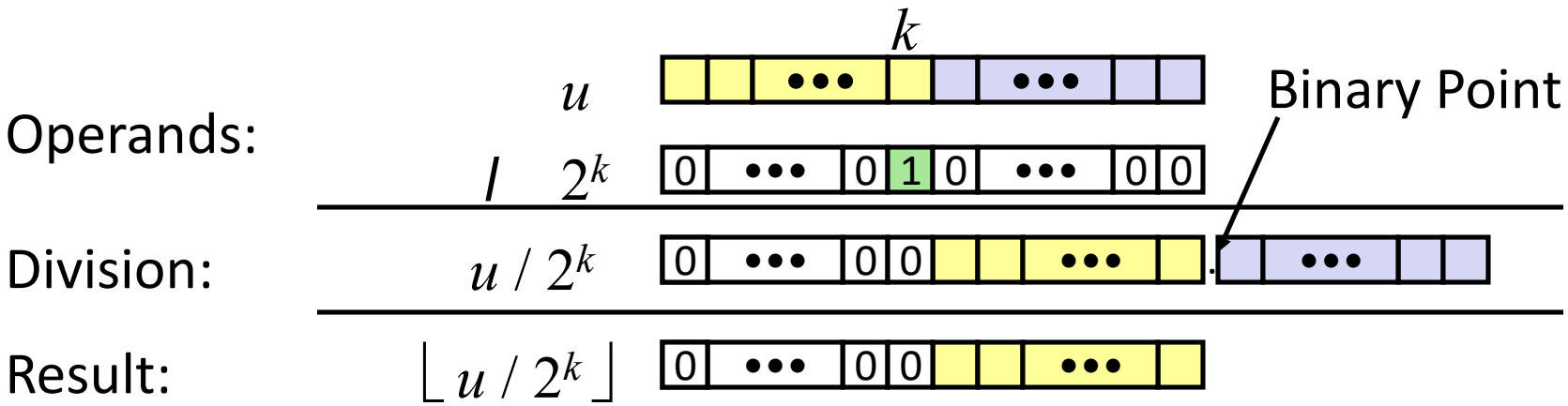
k
u
Operands:
/ 2^k
0 ••• 0 1 0 ••• 0 0
Binary Point
Division:
u / 2^k
0 ••• 0 0 ••• ••• •••

Signed Power-of-2 Divide with Shift

- **Quotient of Signed by Power of 2**
  - `x >> k` gives $\lfloor$ `x / 2`^{k} $\rfloor$
  - Uses arithmetic shift
  - Rounds wrong direction when `u < 0`

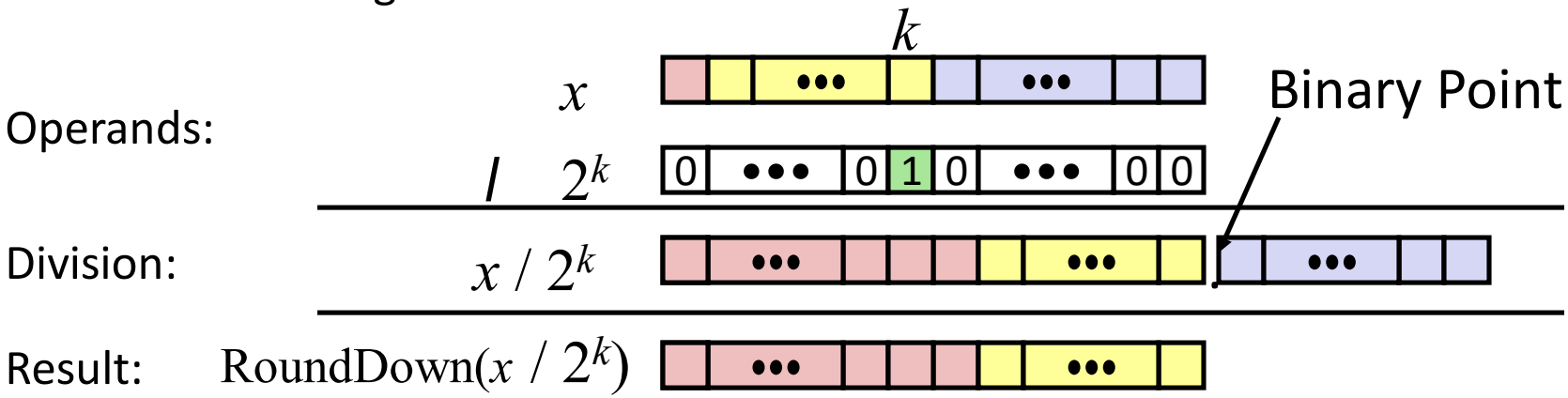

	Division	Computed	Hex	Binary
`y`	-15213	-15213	`C4 93`	`11000100 10010011`
`y >> 1`	-7606.5	-7607	`E2 49`	`11100010 01001001`
`y >> 4`	-950.8125	-951	`FC 49`	`11111100 01001001`
`y >> 8`	-59.4257813	-60	`FF C4`	`11111111 11000100`

Correct Power-of-2 Divide

- **Quotient of Negative Number by Power of 2**
  - Want $\lceil$ **`x / 2`**^{k} $\rceil$ (Round Toward 0)
  - Compute as $\lfloor$ **`(x+2`**^{k}**`-1) / 2`**^{k} $\rfloor$
    - In C: **`(x + (1<<k)-1) >> k`**
    - Biases dividend toward 0

Case 1: No rounding

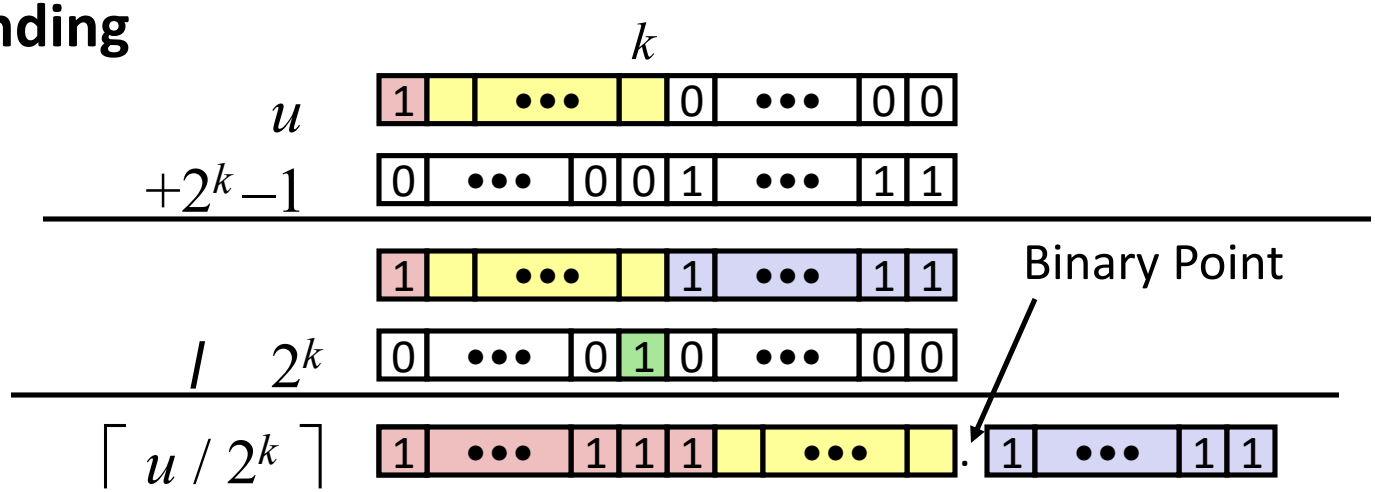

Biasing has no effect

Correct Power-of-2 Divide (Cont.)

Case 2: Rounding

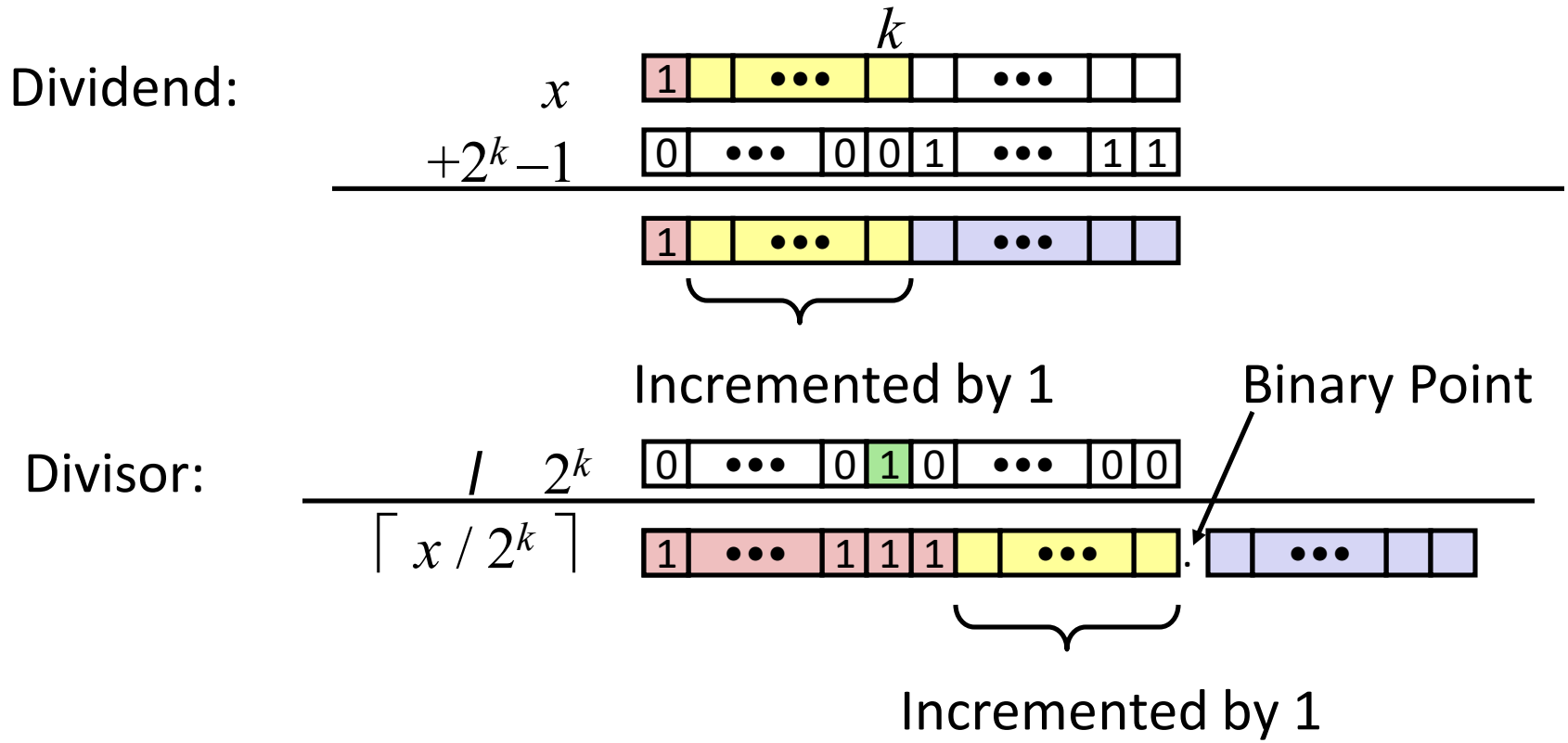

Biasing adds 1 to final result

Negation: Complement & Increment

- **Negate through complement and increase**
  `~x + 1 == -x`
- **Example**
  - Observation: `~x + x == 1111…111 == -1`

	x	1 0 0 1 1 1 0 1
+	~x	0 1 1 0 0 0 1 0
	-1	1 1 1 1 1 1 1 1

x = 15213

	Decimal	Hex	Binary
`x`	15213	3B 6D	00111011 01101101
`~x`	-15214	C4 92	11000100 10010010
`~x+1`	-15213	C4 93	11000100 10010011
`y`	-15213	C4 93	11000100 10010011

Complement & Increment Examples

x = 0

	Decimal	Hex	Binary
0	0	00 00	00000000 00000000
~0	-1	FF FF	11111111 11111111
~0+1	0	00 00	00000000 00000000

x = TMin

	Decimal	Hex	Binary
x	-32768	80 00	10000000 00000000
~x	32767	7F FF	01111111 11111111
~x+1	-32768	80 00	10000000 00000000

Canonical counter example

Today: Bits, Bytes, and Integers

- Representing information as bits
- Bit-level manipulations
- **Integers**
  - Representation: unsigned and signed
  - Conversion, casting
  - Expanding, truncating
  - Addition, negation, multiplication, shifting
  - **Summary**
- Representations in memory, pointers, strings

Arithmetic: Basic Rules

- **Addition:**
  - Unsigned/signed: Normal addition followed by truncate, same operation on bit level
  - Unsigned: addition mod 2^w
    - Mathematical addition + possible subtraction of 2^w
  - Signed: modified addition mod 2^w (result in proper range)
    - Mathematical addition + possible addition or subtraction of 2^w

- **Multiplication:**
  - Unsigned/signed: Normal multiplication followed by truncate, same operation on bit level
  - Unsigned: multiplication mod 2^w
  - Signed: modified multiplication mod 2^w (result in proper range)

Why Should I Use Unsigned?

- ***Don't*** **use without understanding implications**
  - Easy to make mistakes

```
unsigned i;
for (i = cnt-2; i >= 0; i--)
  a[i] += a[i+1];
```

  - Can be very subtle

```
#define DELTA sizeof(int)
int i;
for (i = CNT; i-DELTA >= 0; i-= DELTA)
  . . .
```

Counting Down with Unsigned

- **Proper way to use unsigned as loop index**

```
unsigned i;
for (i = cnt-2; i < cnt; i--)
  a[i] += a[i+1];
```

- **See Robert Seacord, *Secure Coding in C and C++***
  - C Standard guarantees that unsigned addition will behave like modular arithmetic
    - 0 – 1 → *UMax*
- **Even better**

```
size_t i;
for (i = cnt-2; i < cnt; i--)
  a[i] += a[i+1];
```

  - Data type **`size_t`** defined as unsigned value with length = word size
  - Code will work even if **`cnt`** = *UMax*
  - What if **`cnt`** is signed and < 0?

Why Should I Use Unsigned? (cont.)

- ***Do*** **Use When Performing Modular Arithmetic**
  - Multiprecision arithmetic
- ***Do*** **Use When Using Bits to Represent Sets**
  - Logical right shift, no sign extension
- ***Do*** **Use In System Programming**
  - Bit masks, device commands,…

Today: Bits, Bytes, and Integers

- Representing information as bits
- Bit-level manipulations
- Integers
  - Representation: unsigned and signed
  - Conversion, casting
  - Expanding, truncating
  - Addition, negation, multiplication, shifting
  - Summary
- **Representations in memory, pointers, strings**

Examining Data Representations

- **Code to Print Byte Representation of Data**
  - Casting pointer to unsigned char * allows treatment as a byte array

```
typedef unsigned char *pointer;

void show_bytes(pointer start, size_t len){
  size_t i;
  for (i = 0; i < len; i++)
    printf(”%p\t0x%.2x\n",start+i, start[i]);
  printf("\n");
}
```

Printf directives:

%p: Print pointer

%x: Print Hexadecimal

show_bytes Execution Example

```
int a = 15213;
printf("int a = 15213;\n");
show_bytes((pointer) &a, sizeof(int));
```

Result (Linux x86-64):

```
int a = 15213;
0x7fffb7f71dbc    6d
0x7fffb7f71dbd    3b
0x7fffb7f71dbe    00
0x7fffb7f71dbf    00
```

Representing Pointers

```
int B = -15213;
int *P = &B;
```

Sun	IA32	x86-64
EF	AC	3C
FF	28	1B
FB	F5	FE
2C	FF	82
		FD
		7F
		00
		00

Different compilers & machines assign different locations to objects

Even get different results each time run program

Representing Strings

```
char S[6] = "18213";
```

- **Strings in C**
  - Represented by array of characters
  - Each character encoded in ASCII format
    - Standard 7-bit encoding of character set
    - Character "0" has code 0x30
      - Digit *i* has code 0x30+*i*
  - String should be null-terminated
    - Final character = 0
- **Compatibility**
  - Byte ordering not an issue

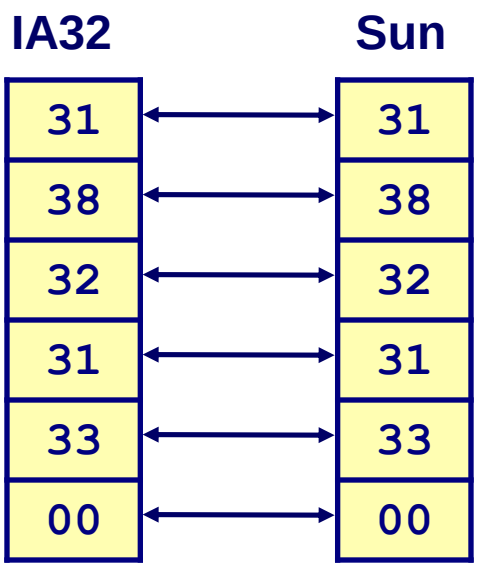

Reading Byte-Reversed Listings

- **Disassembly**
  - Text representation of binary machine code
  - Generated by program that reads the machine code
- **Example Fragment**

Address	Instruction Code	Assembly Rendition
8048365:	5b	pop %ebx
8048366:	81 c3 ab 12 00 00	add $0x12ab,%ebx
804836c:	83 bb 28 00 00 00 00	cmpl $0x0,0x28(%ebx)

- **Deciphering Numbers**
  - Value: 0x12ab
  - Pad to 32 bits: 0x000012ab
  - Split into bytes: 00 00 12 ab
  - Reverse: ab 12 00 00

Integer C Puzzles

Initialization

```
int x = foo();
int y = bar();
unsigned ux = x;
unsigned uy = y;
```

`x < 0`	⇒	`((x*2) < 0)`	✗
`ux >= 0`			✓
`x & 7 == 7`	⇒	`(x<<30) < 0`	✓
`ux > -1`			✗
`x > y`	⇒	`-x < -y`	✗
`x * x >= 0`			✗
`x > 0 && y > 0`	⇒	`x + y > 0`	✗
`x >= 0`	⇒	`-x <= 0`	✓
`x <= 0`	⇒	`-x >= 0`	✗
`(x|-x)>>31 == -1`			✗
`ux >> 3 == ux/8`			✓
`x >> 3 == x/8`			✗
`x & (x-1) != 0`			✗

Summary

- Representing information as bits
- Bit-level manipulations
- Integers
  - Representation: unsigned and signed
  - Conversion, casting
  - Expanding, truncating
  - Addition, negation, multiplication, shifting
- Representations in memory, pointers, strings
- Summary