ECE408/CS483/CSE408 Spring 2026

Applied Parallel Programming

Lecture 17:
Accelerating Matrix Operations

© S. Patel
2023 ECE408/CS483/ University of Illinois at Urbana-Champaign

GPU Acceleration Requires a Platform …

Frameworks & DSLs	TensorRT	Omniverse	JAX	PyTorch	…
SDKs	RAPIDS	CUDA-Q	BioNemo	Ariel	…
Domain-Specific Libraries	cuQuantum	CUDA-CV	cuDNN	nvComp	…
Accelerated Libraries	Thrust	cuBLAS	cuFFT	NPP	…
Communication Libraries	NCCL	NVSHMEM	MPI	UCX	…
Device Libraries	CUB	CUTLASS	cuBLASDx	libcu++	…
Kernel Authoring	CUDA C++	PTX	OpenCL	CUDA Fortran	…
Compiler Stack	nvcc	nvrtc	nvptx	ptxas	…
Host Runtimes & Tools	CUDA Runtime	Drivers	Nsight Tools	Installers	…

CUDA DisTributed eXecution

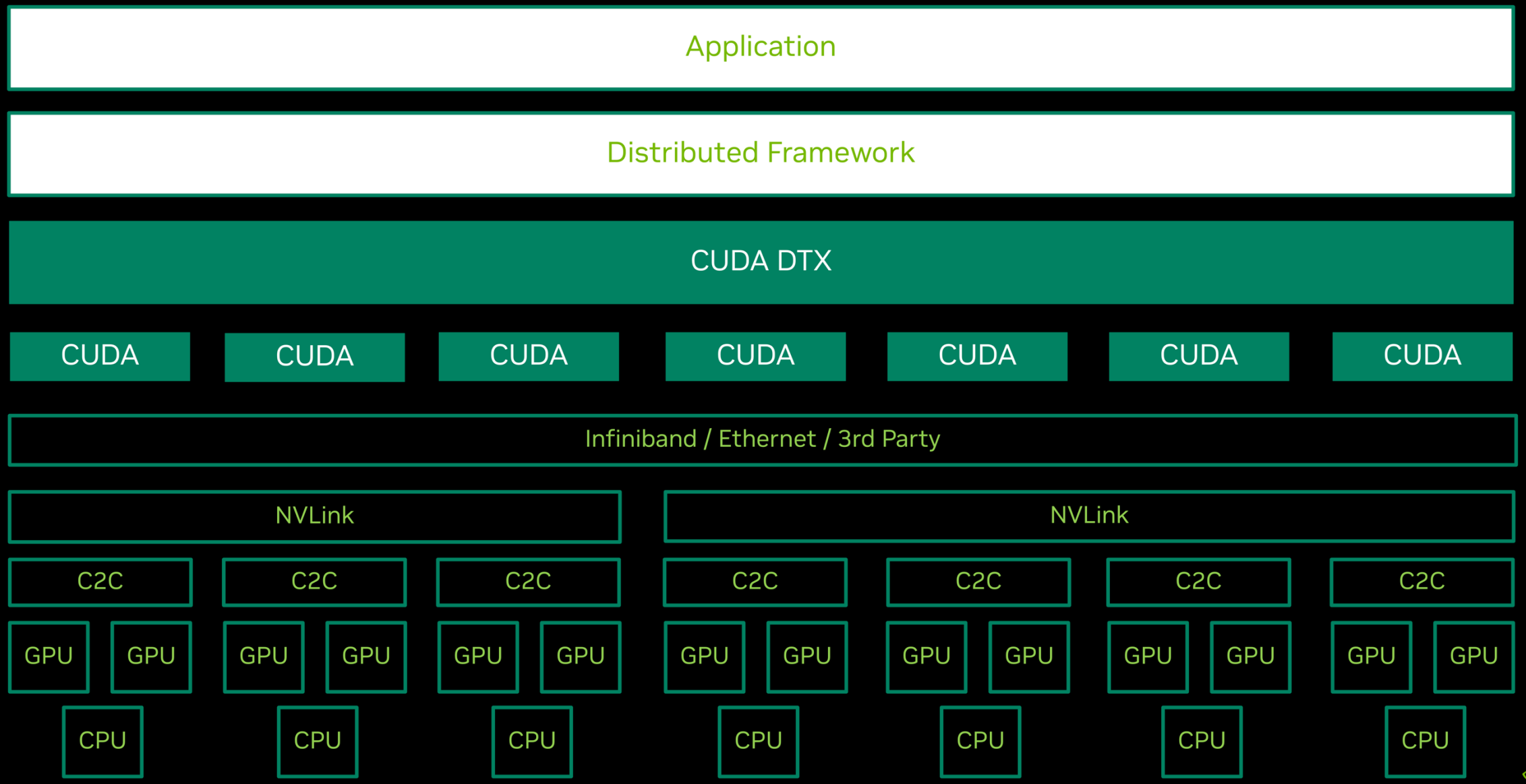

Llama 3.1 70B Model [2024]

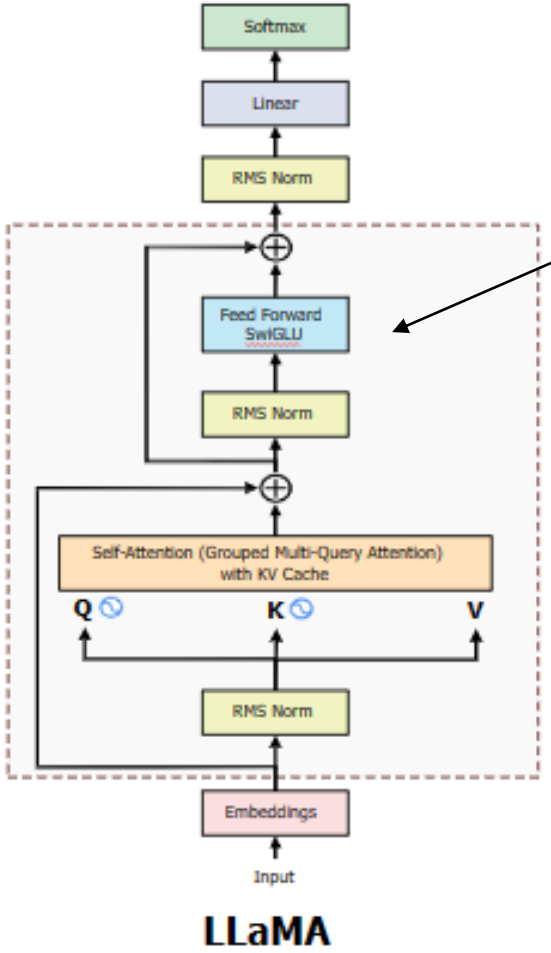

Down Proj: 28672x8192
Gate Proj: 8192x28672
Up Proj: 8192x28672

Q: 8192x8192
K: 8192x1024
V: 8192x1024
Output: 8192x8192

64 Attention Heads & 8 KV Heads

80 Layers

Example: Generating Q in Self Attention

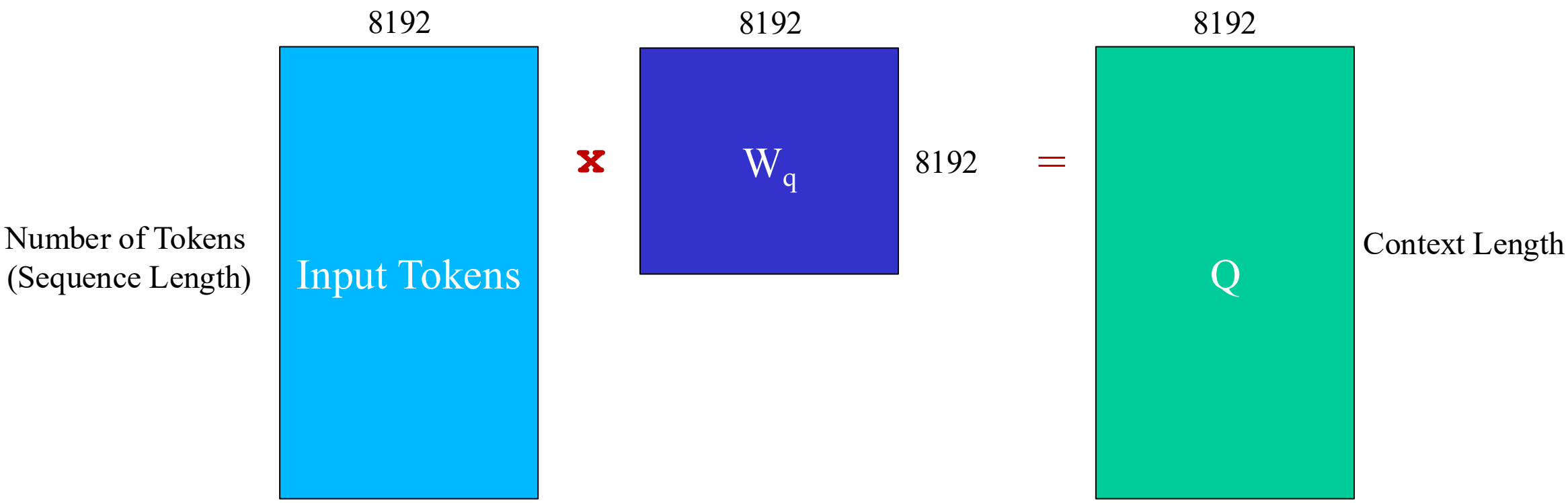

Sequence Length (8192) x 8192 x 8192 x 2 = 11×10^{11} Operations!

What datatypes do we need here? FP32? Int32?

Tiled Matrix Multiplication Kernel

```
__global__ void MatrixMulKernel(float* M, float* N, float* P, int Width)
{
1.  __shared__ float subTileM[TILE_WIDTH][TILE_WIDTH];
2.  __shared__ float subTileN[TILE_WIDTH][TILE_WIDTH];

3.  int bx = blockIdx.x;  int by = blockIdx.y;
4.  int tx = threadIdx.x; int ty = threadIdx.y;

    // Identify the row and column of the P element to work on
5.  int Row = by * TILE_WIDTH + ty;
6.  int Col = bx * TILE_WIDTH + tx;
7.  float Pvalue = 0;

    // Loop over the M and N tiles required to compute the P element
    // The code assumes that the Width is a multiple of TILE_WIDTH!
8.  for (int q = 0; q < Width/TILE_WIDTH; ++q) {
       // Collaborative loading of M and N tiles into shared memory
9.      subTileM[ty][tx] = M[Row*Width + (q*TILE_WIDTH+tx)];
10.     subTileN[ty][tx] = N[(q*TILE_WIDTH+ty)*Width+Col];
11.     __syncthreads();
12.    for (int k = 0; k < TILE_WIDTH; ++k)
13.         Pvalue += subTileM[ty][k] * subTileN[k][tx];
14.     __syncthreads();
15. }
16. P[Row*Width+Col] = Pvalue;
}
```

At the Operation Level, per Thread

```
for (int k = 0; k < TILE_WIDTH; ++k)
        Pvalue += subTileM[ty][k] * subTileN[k][tx];
```

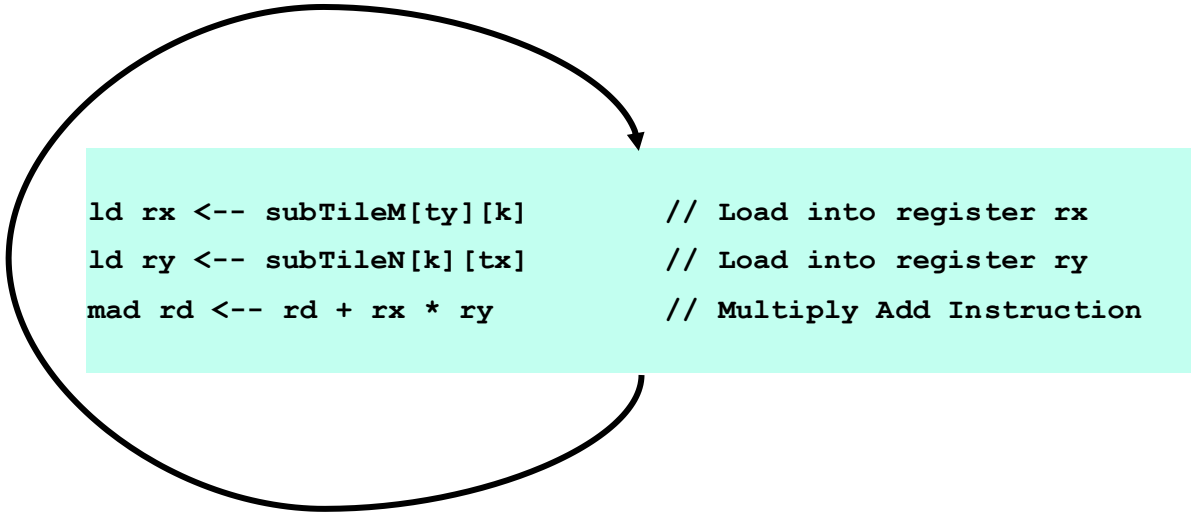

Each thread is able to complete the dot product in O(TILE_WIDTH) cycles.

At the Operation Level, per Warp

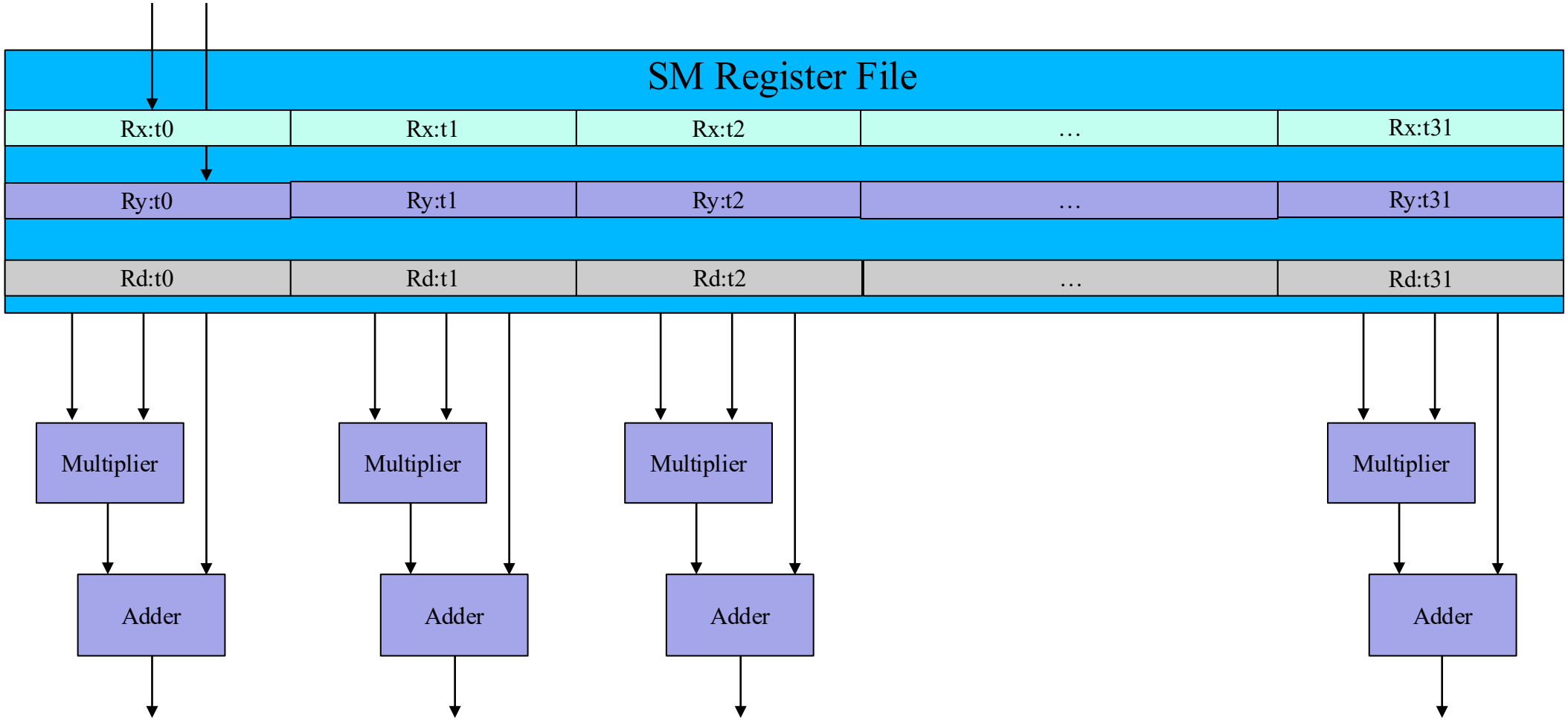

With enough thread blocks, we have a max throughput of 2*SIMD_WIDTH of SM FP Ops per cycle

Let's look at a 4x4 tile example

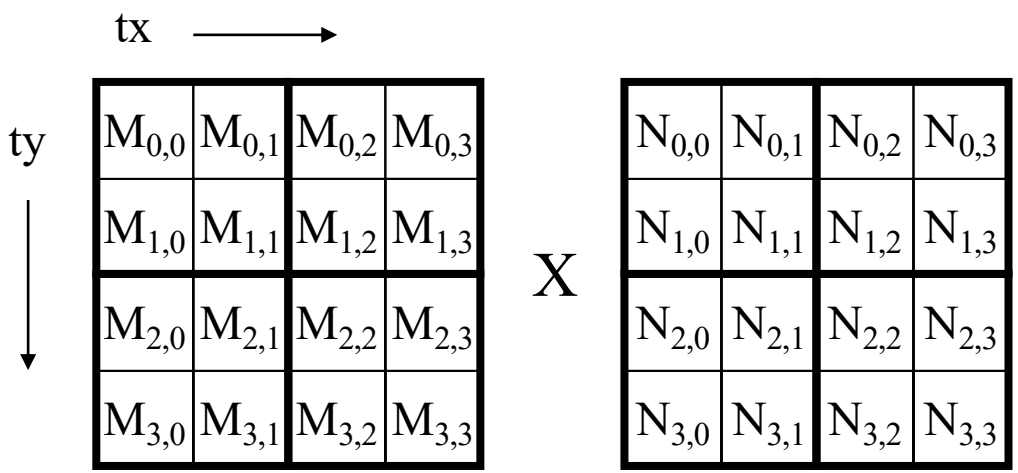


```
for (int k = 0; k < TILE_WIDTH; ++k)
  Pvalue += subTileM[ty][k] * subTileN[k][tx];
```

Shared Memory Loads into Register File by Loop Iteration

	t0	t1	t2	t3	t4	t5
k = 0	$M_{0,0}$, $N_{0,0}$	$M_{0,0}$, $N_{0,1}$	$M_{0,0}$, $N_{0,2}$	$M_{0,0}$, $N_{0,3}$	$M_{1,0}$, $N_{0,0}$	$M_{1,0}$, $N_{0,1}$
k = 1	$M_{0,1}$, $N_{1,0}$	$M_{0,1}$, $N_{1,1}$	$M_{0,1}$, $N_{1,2}$	$M_{0,1}$, $N_{1,3}$	$M_{1,1}$, $N_{1,0}$	$M_{1,1}$, $N_{1,1}$
k = 2	$M_{0,2}$, $N_{2,0}$	$M_{0,2}$, $N_{2,1}$	$M_{0,2}$, $N_{2,2}$	$M_{0,2}$, $N_{2,3}$	$M_{1,2}$, $N_{2,0}$	$M_{1,2}$, $N_{2,1}$
k = 3	$M_{0,3}$, $N_{3,0}$	$M_{0,3}$, $N_{3,1}$	$M_{0,3}$, $N_{3,2}$	$M_{0,3}$, $N_{3,3}$	$M_{1,3}$, $N_{2,0}$	$M_{1,3}$, $N_{3,1}$

More Efficient Pattern

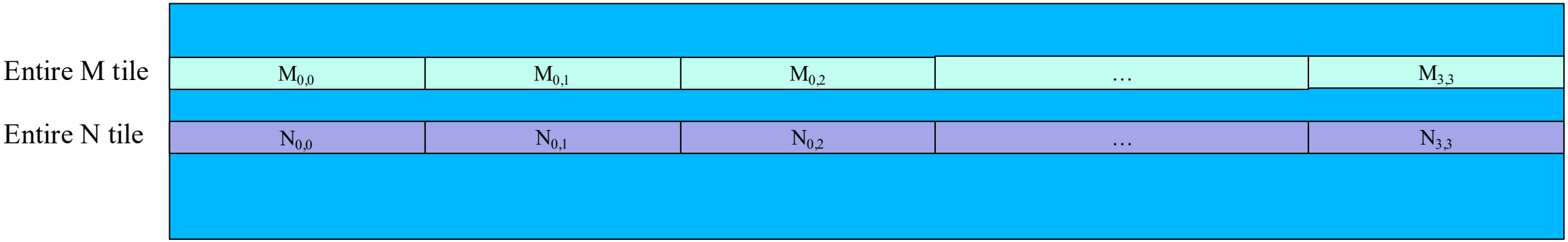

With two loads from shared memory across a warp (only 16 threads needed), we can load the entire 4x4 subtiles of M and N

Optimized Hardware

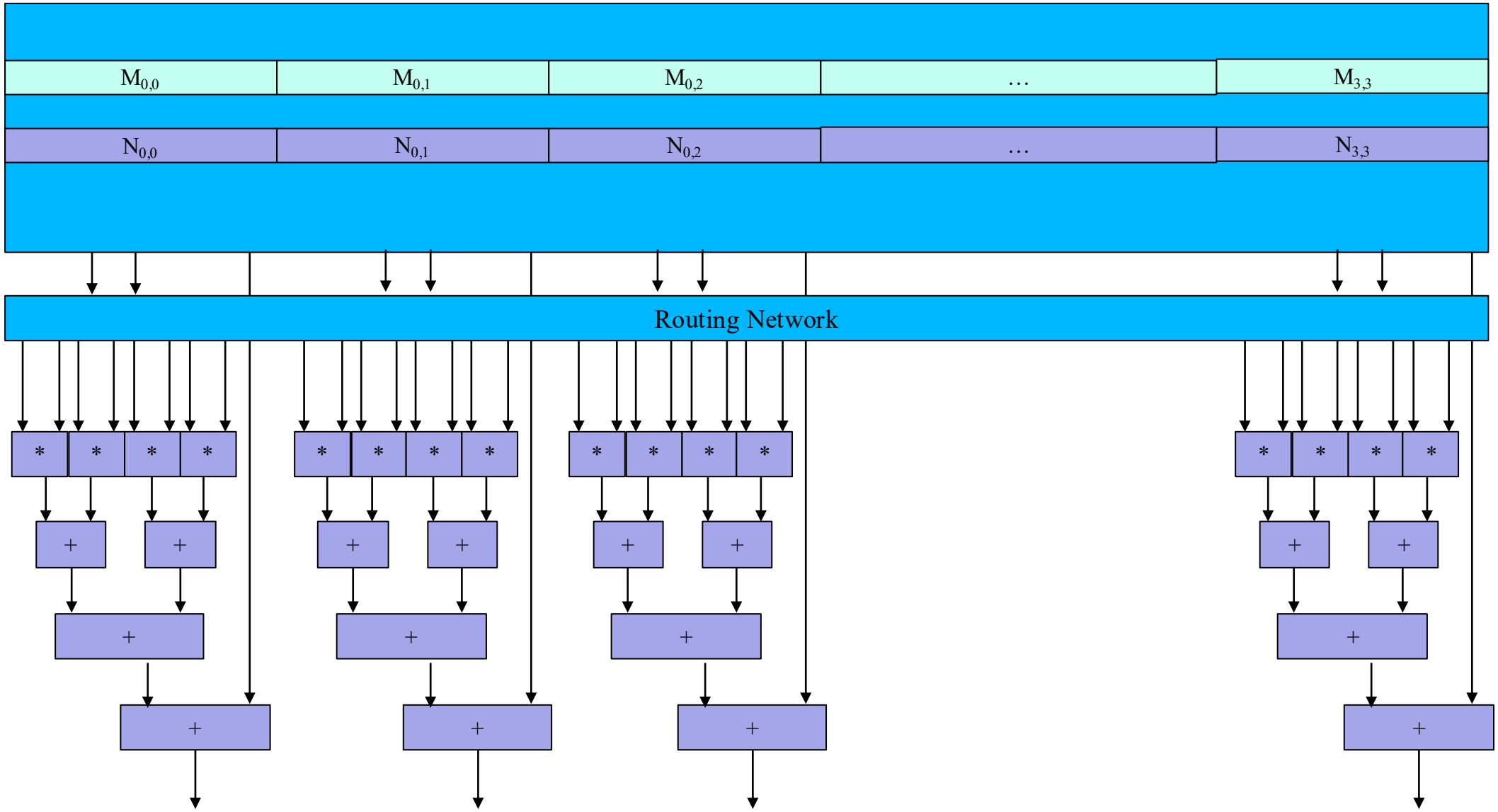

Notes on Optimized HW

- If we optimize for 16-bit types (and smaller)
  - We need 16b * 32 threads = 512 bits per register
  - 4 16-bit multipliers per lane, but 32-bit adders
- Max Throughput is now increased by 4x

Nvidia Tensor Cores

$$D = \begin{pmatrix} A_{0,0} & A_{0,1} & A_{0,2} & A_{0,3} \\ A_{1,0} & A_{1,1} & A_{1,2} & A_{1,3} \\ A_{2,0} & A_{2,1} & A_{2,2} & A_{2,3} \\ A_{3,0} & A_{3,1} & A_{3,2} & A_{3,3} \end{pmatrix} \begin{pmatrix} B_{0,0} & B_{0,1} & B_{0,2} & B_{0,3} \\ B_{1,0} & B_{1,1} & B_{1,2} & B_{1,3} \\ B_{2,0} & B_{2,1} & B_{2,2} & B_{2,3} \\ B_{3,0} & B_{3,1} & B_{3,2} & B_{3,3} \end{pmatrix} + \begin{pmatrix} C_{0,0} & C_{0,1} & C_{0,2} & C_{0,3} \\ C_{1,0} & C_{1,1} & C_{1,2} & C_{1,3} \\ C_{2,0} & C_{2,1} & C_{2,2} & C_{2,3} \\ C_{3,0} & C_{3,1} & C_{3,2} & C_{3,3} \end{pmatrix}$$

FP16 or FP32 FP16 FP16 FP16 or FP32

Basic Tensor Operator: Matrix Multiply + Accumulate

CUDA TENSOR CORE PROGRAMMING

WMMA Matrix Multiply and Accumulate Operation

Warp-level operation to perform matrix multiply and accumulate

```
wmma::mma_sync(Dmat, Amat, Bmat, Cmat);
```

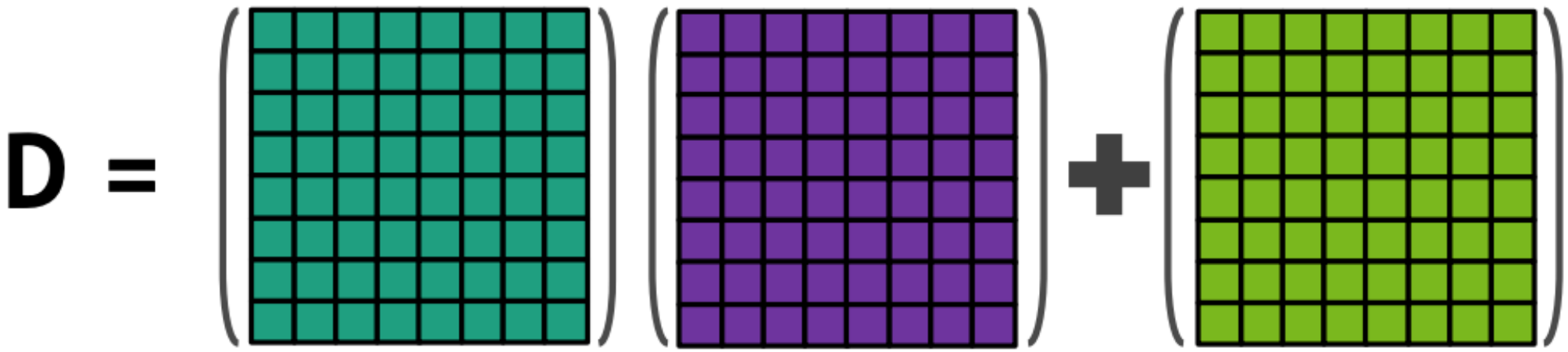

TENSOR SYNCHRONIZATION

Full Warp 16x16 Matrix Math

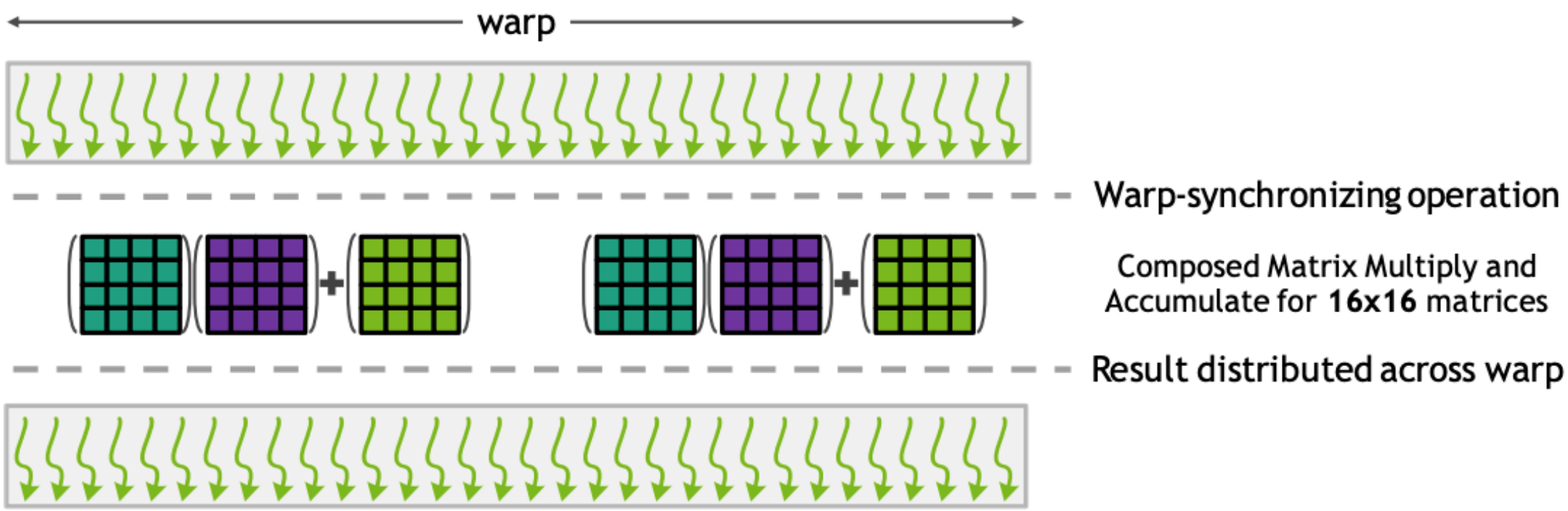

CUDA TENSOR CORE PROGRAMMING

WMMA datatypes

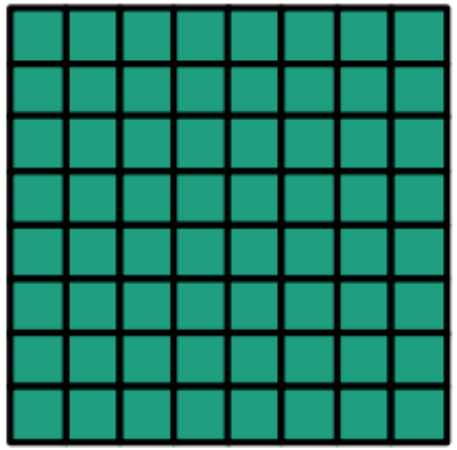

Per-Thread fragments to hold components of matrices for use with Tensor Cores

```
wmma::fragment<matrix_a, …> Amat;
```

CUDA TENSOR CORE PROGRAMMING

WMMA load and store operations

Warp-level operation to fetch components of matrices into fragments

```
wmma::load_matrix_sync(Amat, a, stride);
```

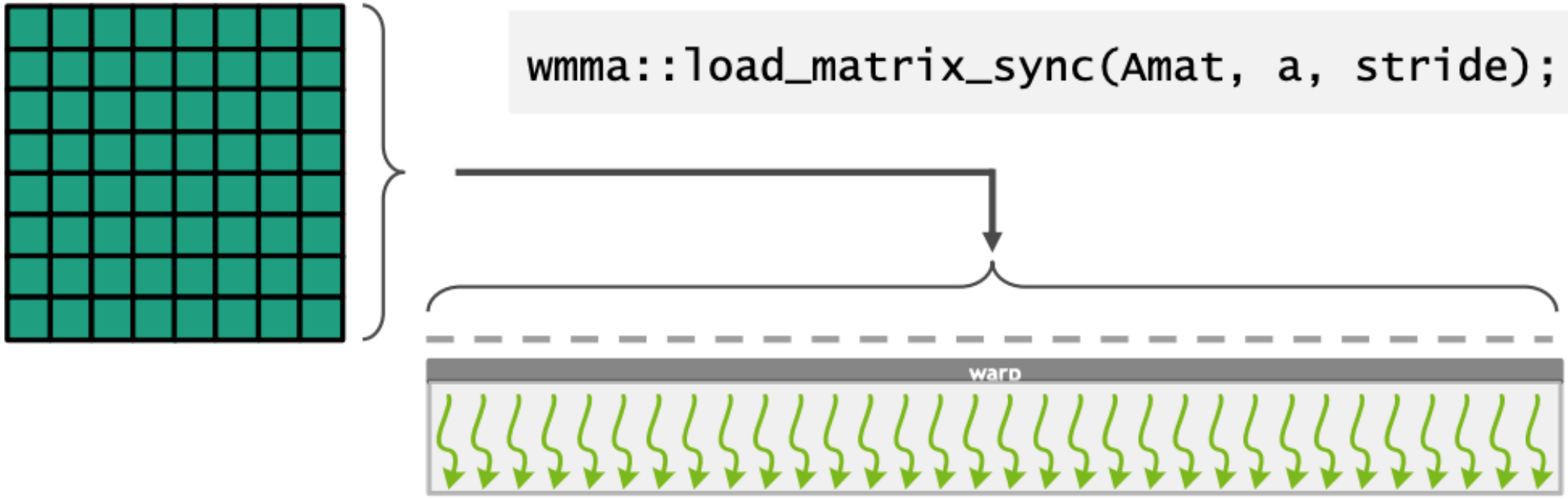

CUDA TENSOR CORE PROGRAMMING

WMMA load and store operations

Warp-level operation to fetch components of matrices into fragments

```
wmma::store_matrix_sync(d, Dmat, stride);
```

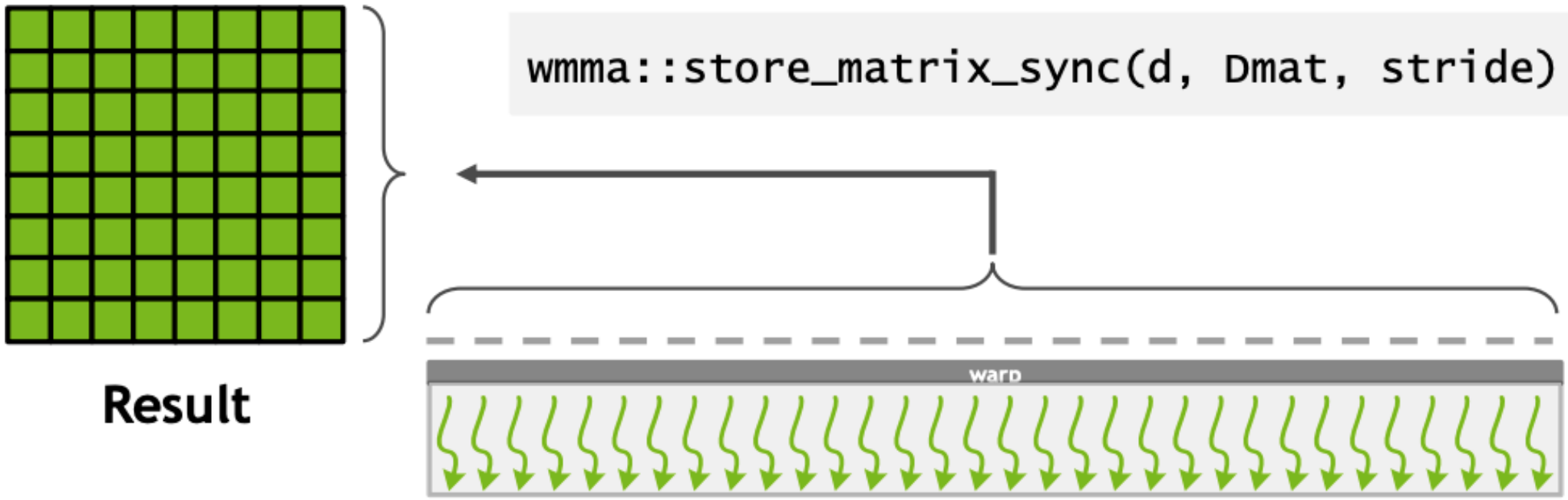

TENSOR CORE EXAMPLE

Create Fragments

Initialize Fragments

Perform MatMul

Store Results

```
__device__ void tensor_op_16_16_16(
    float *d, half *a, half *b, float *c)
{
  wmma::fragment<matrix_a, …> Amat;
  wmma::fragment<matrix_b, …> Bmat;
  wmma::fragment<matrix_c, …> Cmat;

  wmma::load_matrix_sync(Amat, a, 16);
  wmma::load_matrix_sync(Bmat, b, 16);
  wmma::fill_fragment(Cmat, 0.0f);

  wmma::mma_sync(Cmat, Amat, Bmat, Cmat);

  wmma::store_matrix_sync(d, Cmat, 16,
                          wmma::row_major);
}
```

CUDA C++

Warp-Level Matrix Operations

Overall Timelines

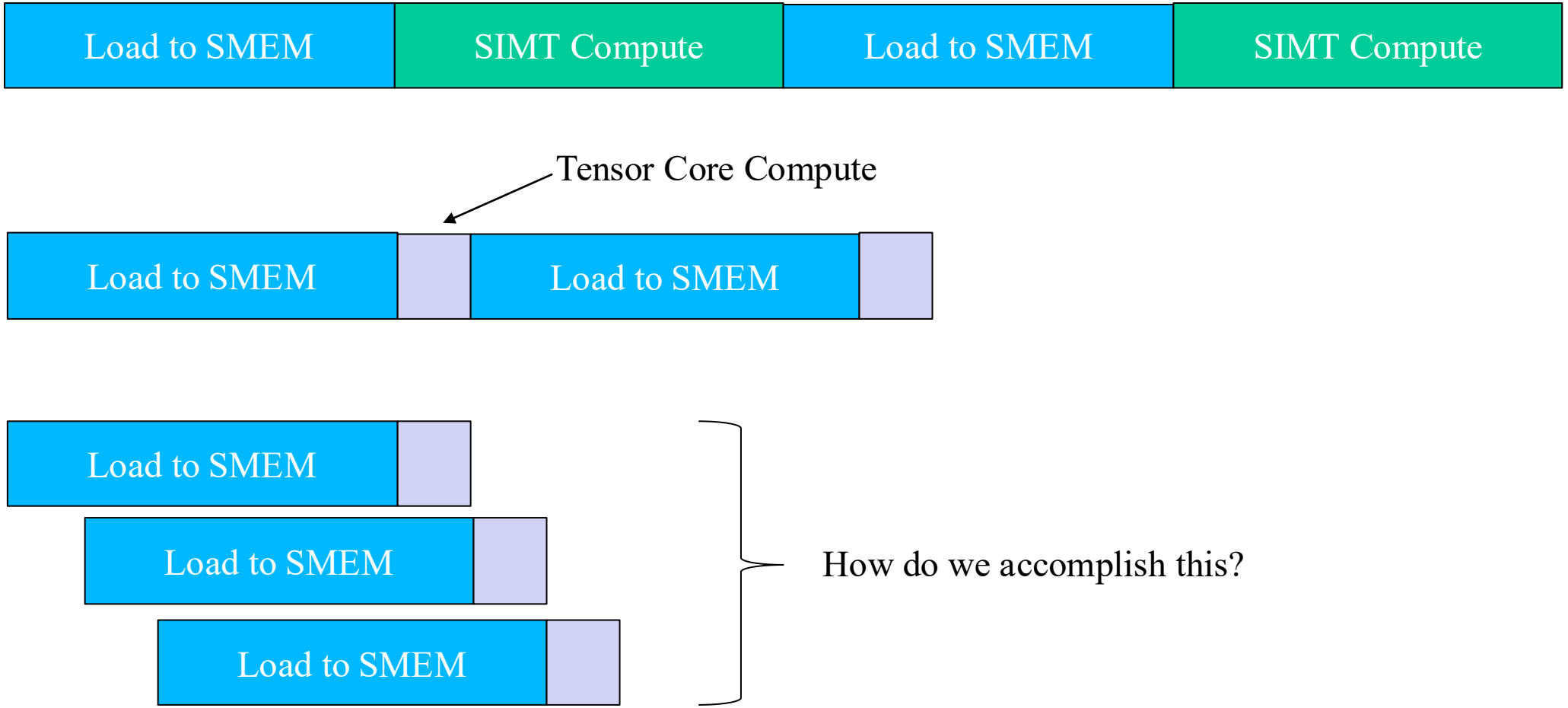

Hierarchy of Execution Models

Grid-level models

Easy acceleration of
bulk data operations

Compiler maps
data onto both
blocks and threads

Block-level models

Productivity & performance
for array-based programs

Application maps
data onto blocks

Compiler maps
blocks onto threads

Thread-level models

Full control for
all parallel workloads

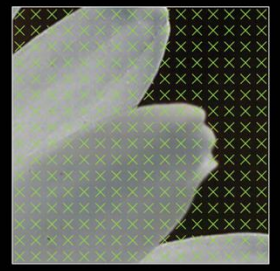

Application maps
data onto both
blocks and threads

Introducing cuTile - Tile Programming for CUDA

Coming soon for CUDA Python, then for CUDA C++

Block-level models

Productivity & performance
for array-based programs

Application maps
data onto blocks

Compiler maps
blocks onto threads

Array/Tensor-based Tile model maps efficiently to Tensor Cores

Simplifies code structure and makes it easier to achieve performance

Compiler **automatically** manages memory spaces and maps to Tensor Core hardware

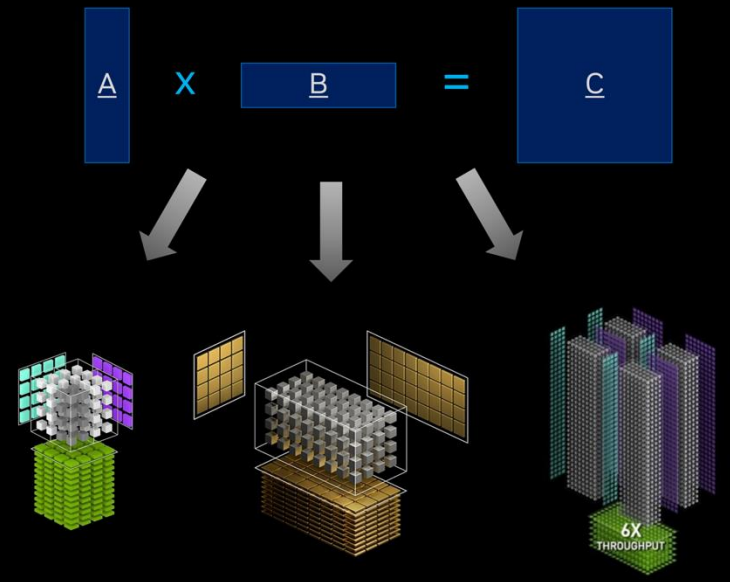

Tile-based matrix multiplication

cuTile programs are **portable** across **current & future generations** of Tensor Cores
(will require re-tuning for peak performance)

Gains from

- Number Representation
  - FP32, FP16, Int8
  - (TF32, BF16)
  - ~16x
- Complex Instructions
  - DP4, HMMA, IMMA
  - ~12.5x
- Process
  - 28nm, 16nm, 7nm, 5nm
  - ~2.5x
- Sparsity
  - ~2x
- Model efficiency has also improved – overall gain > 1000x

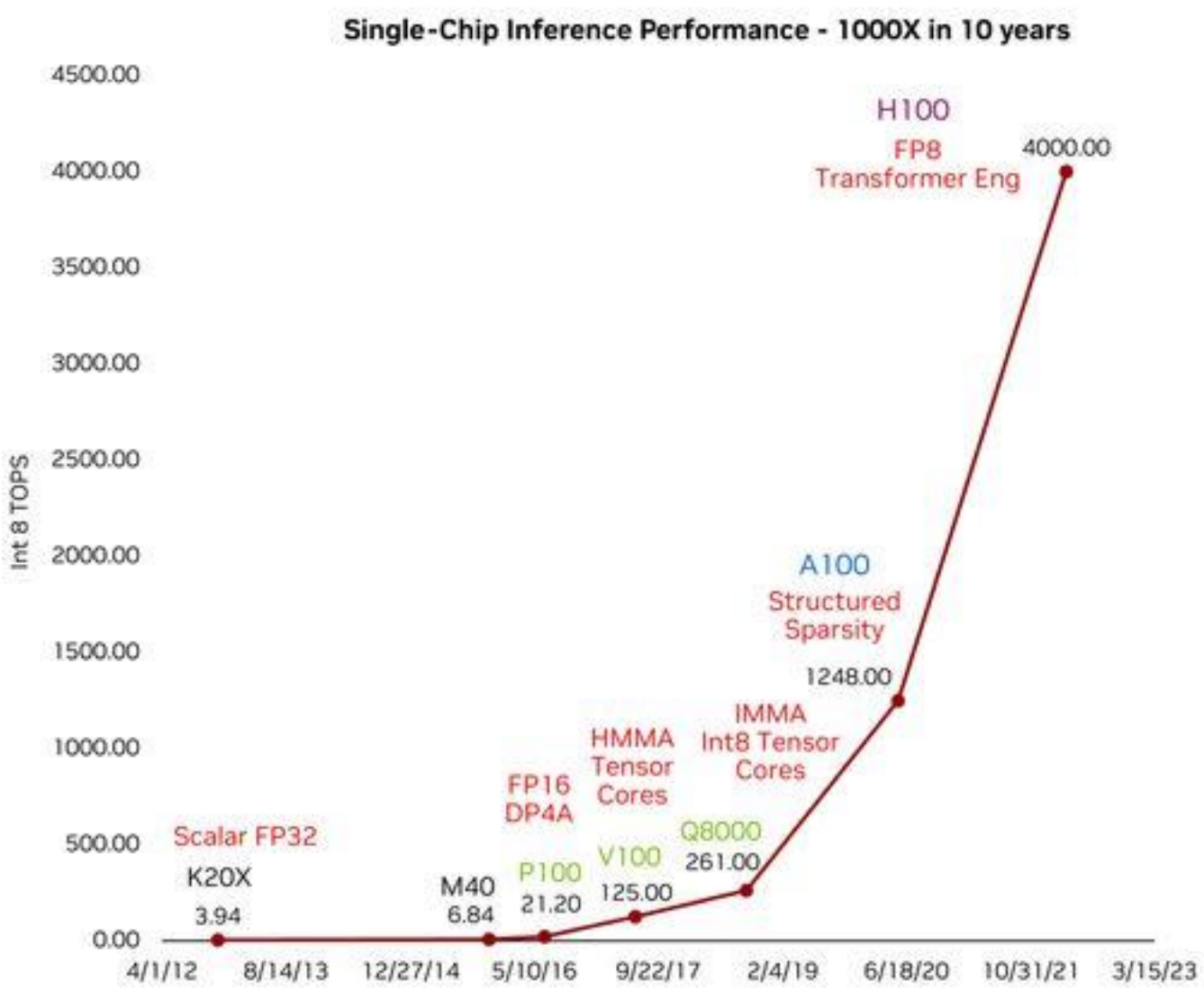

Bill Dally, Chief Scientist, Nvidia

Google TPU (v1 in 2016)

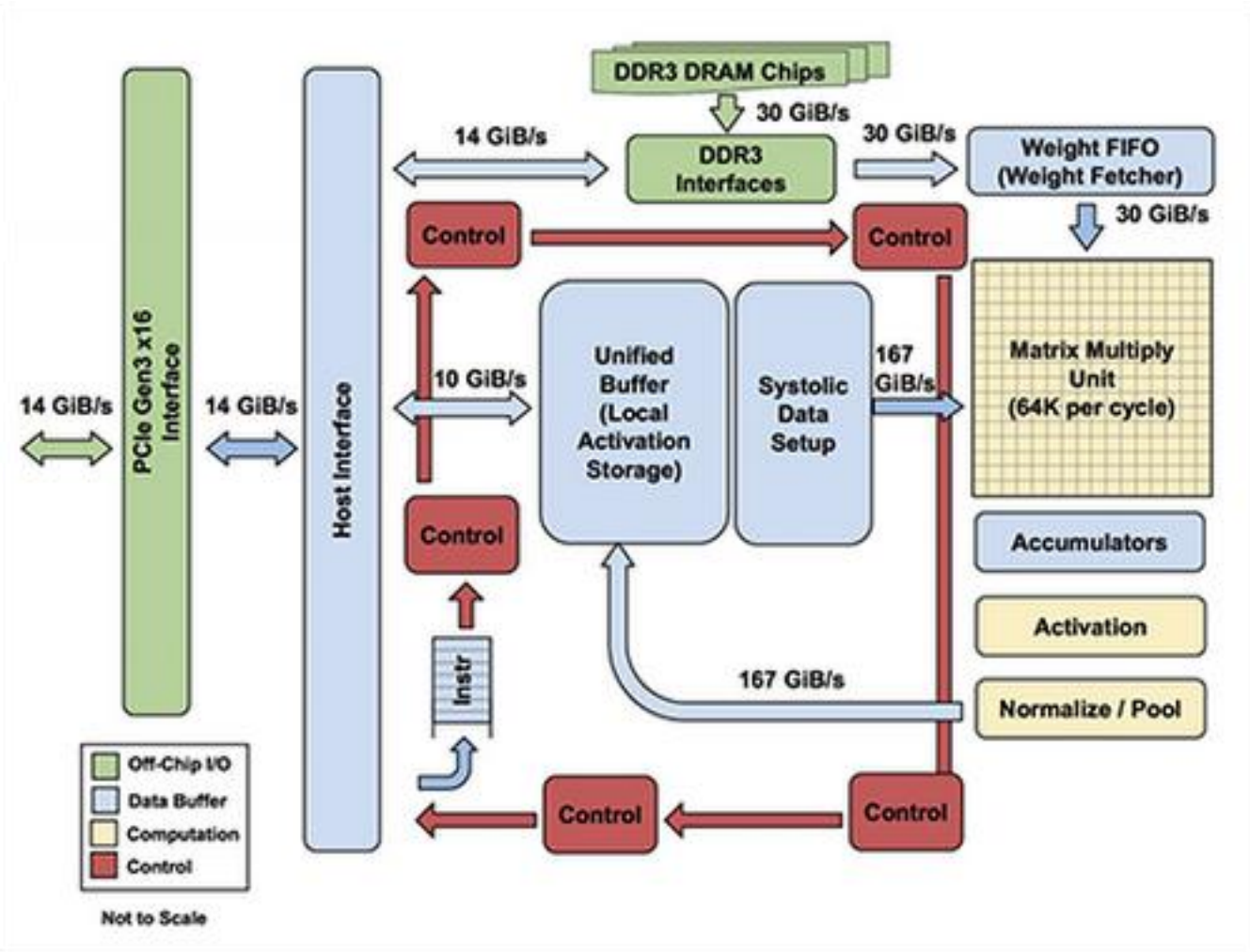

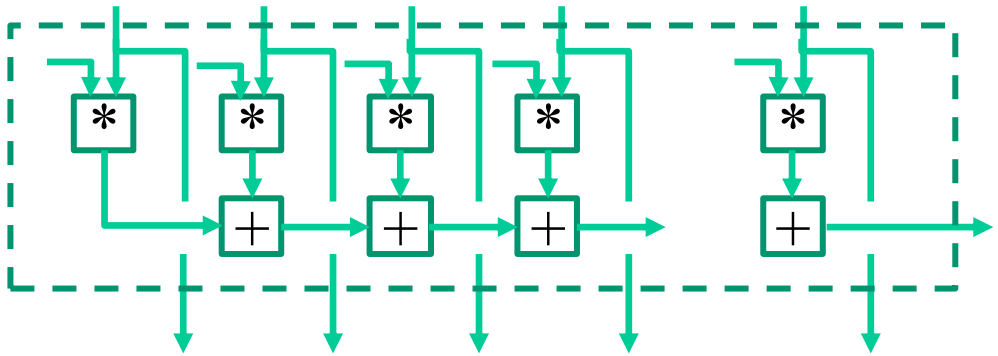

ANY MORE QUESTIONS
READ NVIDIA TECHNICAL BLOG &
CUDA PG: WARP MATRIX FUNCTIONS