UNIVERSITY OF ILLINOIS URBANA-CHAMPAIGN

ECE408 - CS483 - CSE408 Spring 2026
Applied Parallel Programming

Lecture 22: Other Acceleration APIs (Alternatives to CUDA)

Volodymyr Kindratenko

4/14/2026

Course Reminders

- Project
  - Project milestone 2 was due last Friday
  - Project milestone 3 should be out (soon)
- Labs
  - Lab 8 (last lab) is due this week
- Midterm 2
  - 5/5/26

Today's Objectives

- To learn about other (besides CUDA) ways to program GPUs
  - OpenCL: An Open Standard Acceleration API
  - Heterogeneous-Computing Interface for Portability (HIP)
  - OpenACC: A "Low-Code" Acceleration API
  - MPI: A Large Scale, Multi-Node Parallel API – not specifically for GPUs, but rather for large-scale multi-node multi-GPU systems

Accelerated Computing is no longer a question

GPU vendors include:
Nvidia
AMD
Intel
Samsung
Apple
Qualcomm
ARM
etc….

CUDA is just one model for Compute Acceleration

OpenGL (1992)

DirectX (1995)

GPGPU (2002)

CUDA (2007)

OpenCL (2008)

OpenACC (2012)

C++AMP (2013)

RenderScript (2013)

OpenMP (2016)

Metal (2014)

SYCL (2014)

Vulkan (2016)

ROCm HIP (2016)

- Existing frameworks such as MPI, TBB, OpenCV adapted to provide support.
- New frameworks such as Caffe, TensorFlow, R, PyCUDA natively support acceleration.

OpenCL, HIP, OpenACC, MPI

- OpenCL: An Open Standard Acceleration API
- Heterogeneous-Computing Interface for Portability (HIP)
- OpenACC: A “Low-Code” Acceleration API
- MPI: A Large Scale, Multi-Node Parallel API

Common Traits for Acceleration APIs

- HARDWARE
  - Hierarchy of lightweight cores
  - Local scratchpad memories
  - Lack of HW coherence
  - Slow global atomics
  - Threading
- SOFTWARE
  - Kernel oriented acceleration
  - Device memory vs. Host memory
  - Software managed memory
  - Grids, Blocks, Threads
  - Bulk Synchronous Parallelism

OpenCL

- Framework for CPUs, GPUs, DSPs, FPGAs, etc. (not just NVIDIA GPUs)
- Initially developed by Apple with support from AMD, IBM, Qualcomm, Intel, and Nvidia. OpenCL 1.0 launched in 2008.
- OpenCL 2.2 launched in May 2017
- Apple announces dropping of OpenCL in 2018

OpenCL Memory Model

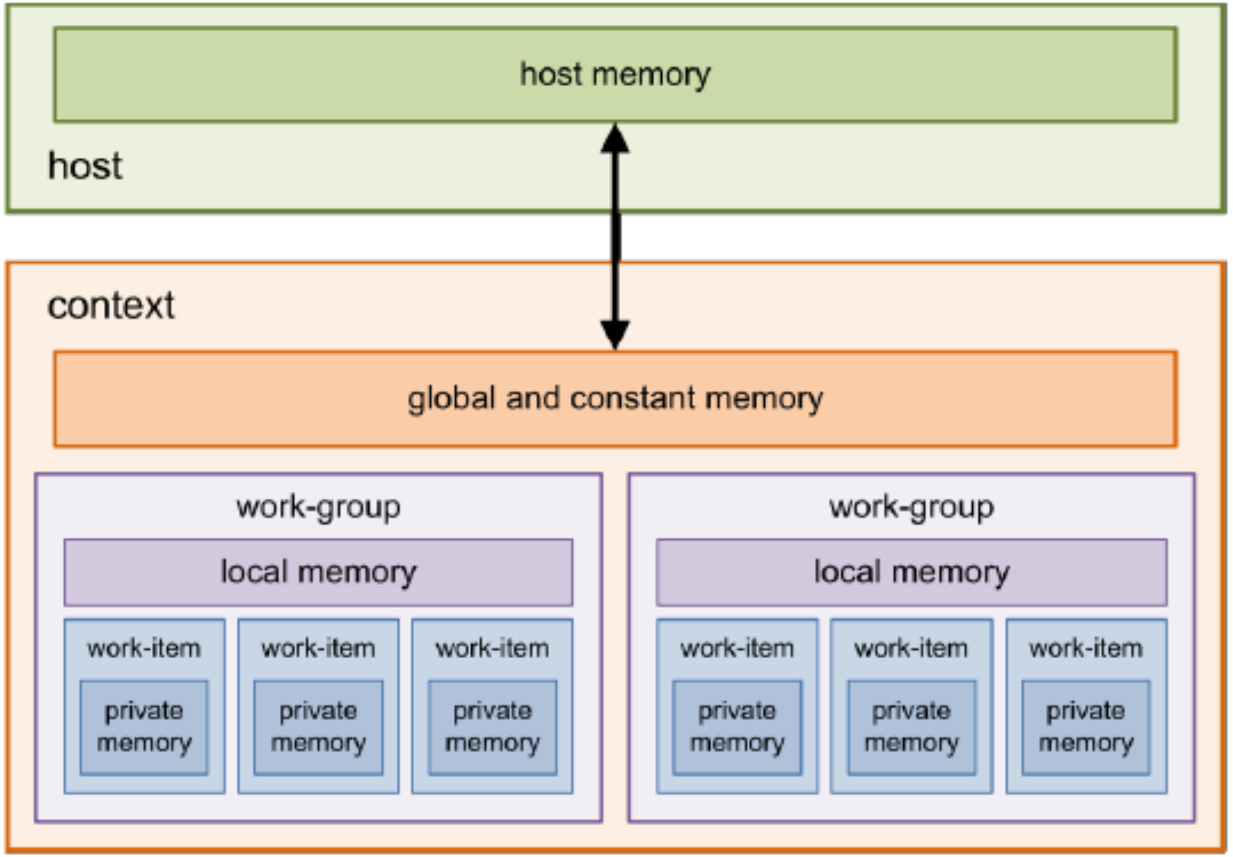

OpenCL MatMult

- Notice similarity to CUDA
- WorkGroup similar to Block
- WorkItem similar to Thread
- __local similar to __shared

```
// Tiled and coalesced version
__kernel void myGEMM2(int M, int N, int K, __global float*A, __global float*B, __global float*C) {

  // Thread identifiers
  const int row = get_local_id(0); // Local row ID (max: TS)
  const int col = get_local_id(1); // Local col ID (max: TS)
  const int globalRow = TS*get_group_id(0) + row; // Row ID of C (0..M)
  const int globalCol = TS*get_group_id(1) + col; // Col ID of C (0..N)

  // Local memory to fit a tile of TS*TS elements of A and B
  __local float Asub[TS][TS];
  __local float Bsub[TS][TS];

  // Initialise the accumulation register
  float acc = 0.0f;
  // Loop over all tiles
  const int numTiles = K/TS;
  for (int t=0; t<numTiles; t++) {

     // Load one tile of A and B into local memory
     const int tiledRow = TS*t + row;
     const int tiledCol = TS*t + col;
     Asub[col][row] = A[tiledCol*M + globalRow];
     Bsub[col][row] = B[globalCol*K + tiledRow];

     // Synchronise to make sure the tile is loaded
     barrier(CLK_LOCAL_MEM_FENCE);

     // Perform the computation for a single tile
     for (int k=0; k<TS; k++)
        acc += Asub[k][row] * Bsub[col][k];

     // Synchronise before loading the next tile
     barrier(CLK_LOCAL_MEM_FENCE);
  }

  // Store the final result in C
  C[globalCol*M + globalRow] = acc;
}
```

HIP

- Heterogeneous-Computing Interface for Portability (HIP)
  - C++ dialect designed to ease conversion of CUDA applications to portable C++ code.
  - Provides a C-style API and a C++ kernel language.
  - The C++ interface can use templates and classes across the host/kernel boundary.
- HIP code can run on AMD hardware (through the HCC compiler) or NVIDIA hardware (through the NVCC compiler).
- The HIPify tool automates much of the conversion work by performing a source-to-source transformation from CUDA to HIP.

vectorAdd with HIP

```
__global__ void vecAdd(double *a, double *b, double *c, int n) {
    int id = blockIdx.x*blockDim.x+threadIdx.x;
    if (id < n) c[id] = a[id] + b[id];
}
...
        hipMalloc(&d_a, nbytes);
        hipMalloc(&d_b, nbytes);
        hipMalloc(&d_c, nbytes);

        hipMemcpy(d_a, h_a, bytes, hipMemcpyHostToDevice);
        hipMemcpy(d_b, h_b, bytes, hipMemcpyHostToDevice);

        blockSize = 1024;
        gridSize = (int)ceil((float)n/blockSize);

        hipLaunchKernelGGL(vecAdd, dim3(gridSize), dim3(blockSize), 0, 0, d_a, d_b, d_c, n);
        hipDeviceSynchronize( );

        hipMemcpy(h_c, d_c, bytes, hipMemcpyDeviceToHost);
...
```

OpenACC

- The OpenACC Application Programming Interface (API) provides a set of
  - compiler directives (pragmas),
  - library routines, and
  - environment variables

  that enable
  - FORTRAN, C and C++ programs
  - to execute on accelerator devices
  - including GPUs and CPUs.

Pragmas Provide Extra Information

- In C and C++,
  - the `#pragma` directive
  - provides the compiler with
  - information not specified in the language.

- For OpenACC, they look like this:
  #pragma acc [the information goes here]

The OpenACC Abstract Machine Model

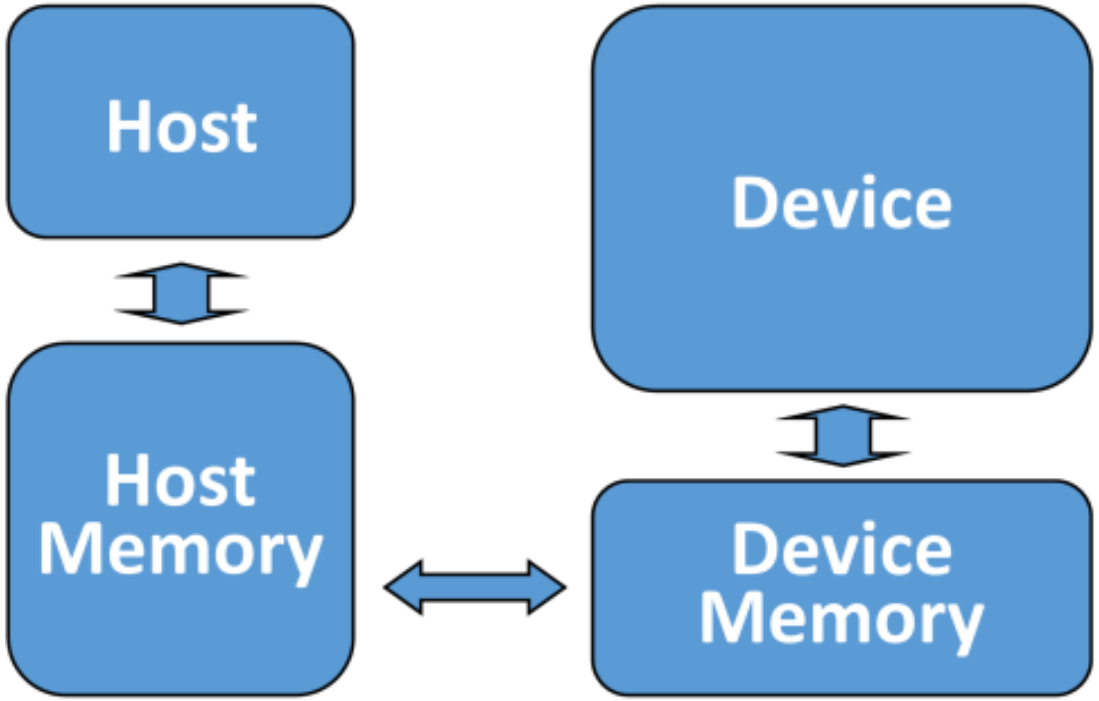

The OpenACC Directives

Manage Data Movement

Initiate Parallel Execution

Optimize Loop Mappings

```
#pragma acc data copyin(x,y) copyout(z)
{
    ...
    #pragma acc parallel
    {
    #pragma acc loop gang vector
        for (i = 0; i < n; ++i) {
            z[i] = x[i] + y[i];
            ...
        }
    }
    ...
}
```

Simple Matrix-Matrix Multiplication in OpenACC

```
void computeAcc(float *P, const float *M, const float *N, int Mh, int Mw, int Nw) {
 #pragma acc parallel loop copyin(M[0:Mh*Mw]) copyin(N[0:Nw*Mw]) copyout(P[0:Mh*Nw])
 for (int i=0; i<Mh; i++) {
     #pragma acc loop
     for (int j=0; j<Nw; j++) {
         float sum = 0;
         for (int k=0; k<Mw; k++) {
             float a = M[i*Mw+k];
             float b = N[k*Nw+j];
             sum += a*b;
         }
         P[i*Nw+j] = sum;
     }
  }
}
```

Adding Pragmas to Sequential Code

- The **code** is
  - **identical to** the **sequential** version
  - **except for** the two **pragmas**
  - at lines 2 and 4.

- OpenACC uses the compiler directive mechanism to extend the base language.

Simple Matrix-Matrix Multiplication in OpenACC

```
1  void computeAcc(float *P, const float *M, const float *N, int Mh, int Mw, int Nw) {
2   #pragma acc parallel loop copyin(M[0:Mh*Mw]) copyin(N[0:Nw*Mw]) copyout(P[0:Mh*Nw])
3   for (int i=0; i<Mh; i++) {
4       #pragma acc loop
5       for (int j=0; j<Nw; j++) {
6           float sum = 0;
7           for (int k=0; k<Mw; k++) {
8               float a = M[i*Mw+k];
9               float b = N[k*Nw+j];
10              sum += a*b;
11          }
12          P[i*Nw+j] = sum;
13      }
14   }
15 }
```

tells compiler
- to execute ‘i’ loop
- (lines 3 through 14)
- in parallel on accelerator.

copyin/copyout specify
- how matrix data
- should be transferred between memories.

Simple Matrix-Matrix Multiplication in OpenACC

```
1  void computeAcc(float *P, const float *M, const float *N, int Mh, int Mw, int Nw) {
2   #pragma acc parallel loop copyin(M[0:Mh*Mw]) copyin(N[0:Nw*Mw]) copyout(P[0:Mh*Nw])
3   for (int i=0; i<Mh; i++) {
4       #pragma acc loop
5       for (int j=0; j<Nw; j++) {
6           float sum = 0;
7           for (int k=0; k<Mw; k++) {
8               float a = M[i*Mw+k];
9               float b = N[k*Nw+j];
10              sum += a*b;
11          }
12          P[i*Nw+j] = sum;
13      }
14   }
15 }
```

tells compiler
- to map ‘j’ loop
- (lines 5 through 13)
- to second level
- of parallelism on accelerator.

Motivating Goal: One Version of Code

- OpenACC programmers
  - can often start with a sequential version,
  - then annotate their program with directives,
  - leaving most kernel details and data transfers
  - to the OpenACC compiler.

- OpenACC code can be compiled by non-OpenACC compilers by ignoring the pragmas.

Reality is More Complicated

- Reality check:
  - can be difficult to write code
  - that works correctly and well
  - with and without pragmas.
- Some OpenACC programs
  - behave differently or even incorrectly
  - if pragmas are ignored.

Pitfall: Strong Dependence on Compiler

- Some OpenACC pragmas
  - are hints to the OpenACC compiler,
  - which may or may not be able to act accordingly
- Performance depends heavily
  - on the quality of the compiler
  - (more so than with CUDA or OpenCL).

OpenACC Device Model

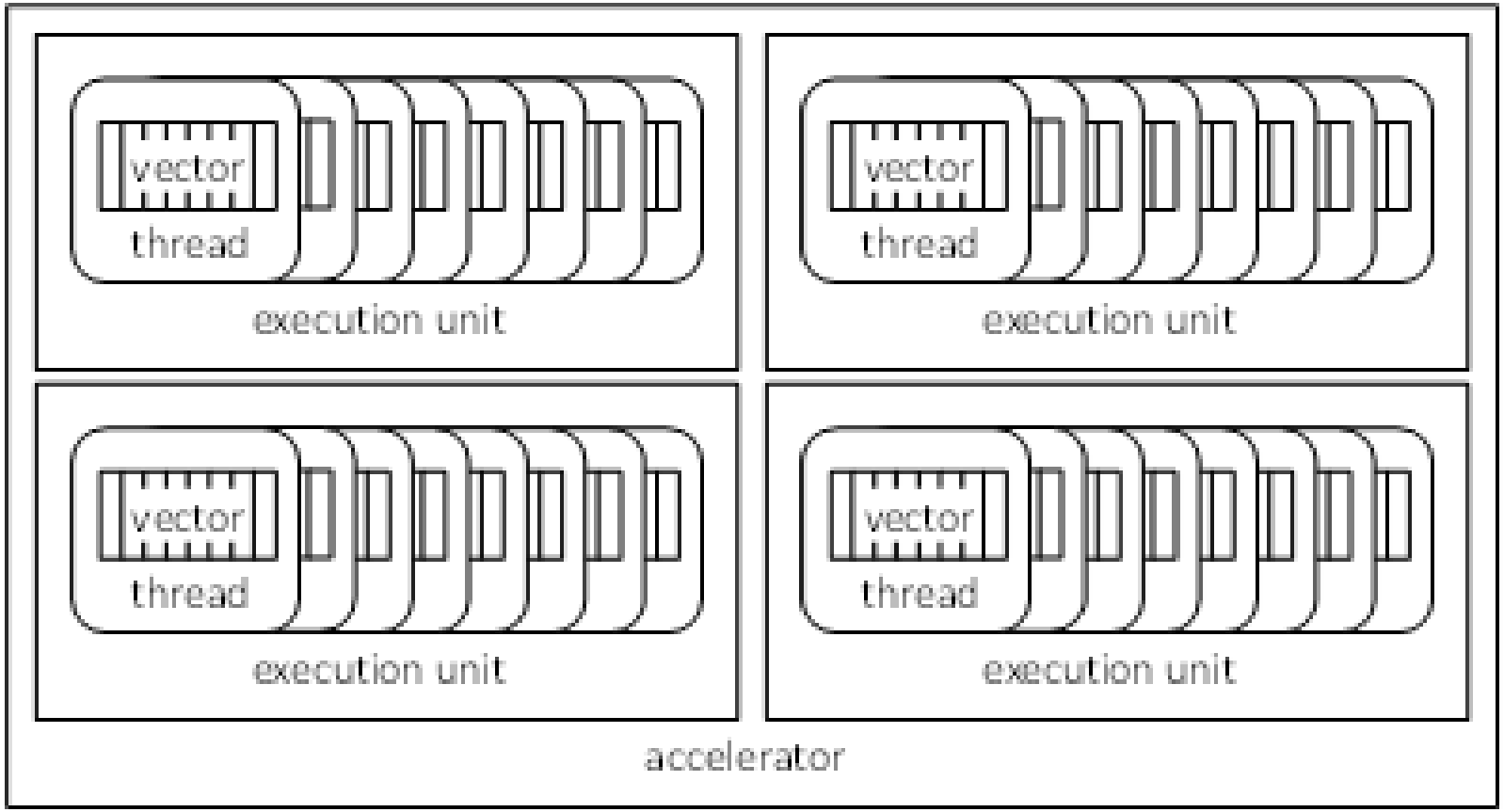

- Currently OpenACC does not allow user-specified synchronization across threads.

OpenACC Execution Model (Gangs and Works)

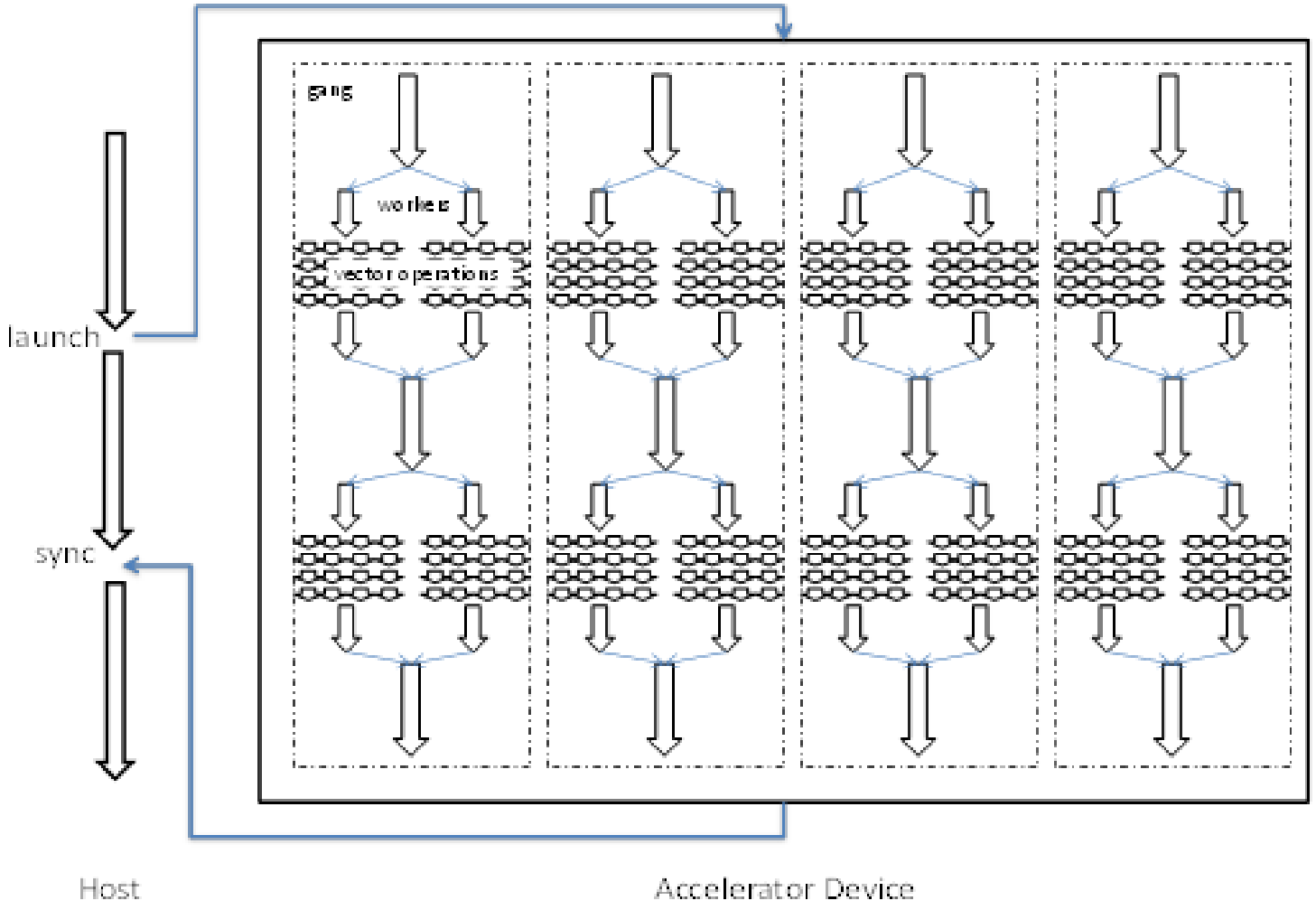

Parallel vs. Loop Constructs

```
#pragma acc parallel loop copyin(M[0:Mh*Mw]) copyin(N[0:Nw*Mw]) copyout(P[0:Mh*Nw])
for (int i=0; i<Mh; i++) {
…
}
```

is equivalent to:

```
#pragma acc parallel copyin(M[0:Mh*Mw]) copyin(N[0:Nw*Mw]) copyout(P[0:Mh*Nw])
{
    #pragma acc loop
    for (int i=0; i<Mh; i++) {
        …
    }
}
```

(a parallel region that consists of just a loop)

Parallel Construct

- A parallel construct is executed on an accelerator
- One can specify the number of gangs and number of works in each gang
- Programmer's directive:

```
#pragma acc parallel copyout(a) num_gangs(1024) num_workers(32)
{
    a = 23;
}
```

- 1024*32 workers will be created. a=23 will be executed redundantly by all 1024 gang leads (probably not what we want)

What does each “Gang Loop” do?

```
#pragma acc parallel num_gangs(1024)
{
    for (int i=0; i<2048; i++) {
        …
    }
}
```

The for-loop will be redundantly executed by 1024 gangs

```
#pragma acc parallel num_gangs(1024)
{
    #pragma acc loop gang
    for (int i=0; i<2048; i++) {
        …
    }
}
```

The 2048 iterations of the for-loop will be divided among 1024 gangs for execution

Worker Loop

```
#pragma acc parallel num_gangs(1024) num_workers(32)
{
    #pragma acc loop gang
    for (int i=0; i<2048; i++) {
        #pragma acc loop worker
        for (int j=0; j<512; j++) {
            foo(i,j);
        }
    }
}
```

1024*32=32K workers will be created, each executing 1M/32K = 32 instance of foo()

A More Complex Example

```
#pragma acc parallel num_gangs(32)
{
    Statement 1; Statement 2;
    #pragma acc loop gang
    for (int i=0; i<n; i++) {
        Statement 3; Statement 4;
    }
    Statement 5;  Statement 6;
    #pragma acc loop gang
    for (int i=0; i<m; i++) {
        Statement 7;  Statement 8;
    }
    Statement 9;
    if (condition)
      Statement 10;
}
```

- Statements 1 and 2 are redundantly executed by 32 gangs
- The n for-loop iterations are distributed to 32 gangs

Kernel Regions

```
#pragma acc kernels
{
    #pragma acc loop num_gangs(1024)
    for (int i=0; i<2048; i++) {
        a[i] = b[i];
    }
    #pragma acc loop num_gangs(512)
    for (int j=0; j<2048; j++) {
        c[j] = a[j]*2;
    }
    for (int k=0; k<2048; k++) {
        d[k] = c[k];
    }
}
```

- Kernel constructs are descriptive of programmer intentions (suggestions)

Reduction

- Because each iteration of the loop adds to the variable sum, we must declare a reduction.
- A parallel reduction may return a slightly different result than a sequential addition due to floating point limitations.

```
#pragma acc parallel loop
 reduction(+:sum)
  for(int i=0;i<n;i++) {
    sum +=
      xcoefs[i]*ycoefs[i];
  }
```

C/C++ vs. FORTRAN

```
// C or C++
#pragma acc <directive> <clauses>
{ … }

! Fortran
!$acc <directive> <clauses>
…
!$acc end <directive>
```

Top 5 Supercomputers (Spring 2025)

Rank	System	Cores	Rmax (PFlop/s)	Rpeak (PFlop/s)	Power (kW)
1	**El Capitan** - HPE Cray EX255a, AMD 4th Gen EPYC 24C 1.8GHz, AMD Instinct MI300A, Slingshot-11, TOSS, HPE DOE/NNSA/LLNL United States	11,039,616	1,742.00	2,746.38	29,581
2	**Frontier** - HPE Cray EX235a, AMD Optimized 3rd Generation EPYC 64C 2GHz, AMD Instinct MI250X, Slingshot-11, HPE Cray OS, HPE DOE/SC/Oak Ridge National Laboratory United States	9,066,176	1,353.00	2,055.72	24,607
3	**Aurora** - HPE Cray EX - Intel Exascale Compute Blade, Xeon CPU Max 9470 52C 2.4GHz, Intel Data Center GPU Max, Slingshot-11, Intel DOE/SC/Argonne National Laboratory United States	9,264,128	1,012.00	1,980.01	38,698
4	**JUPITER Booster** - BullSequana XH3000, GH Superchip 72C 3GHz, NVIDIA GH200 Superchip, Quad-Rail NVIDIA InfiniBand NDR200, RedHat Enterprise Linux, EVIDEN EuroHPC/FZJ Germany	4,801,344	793.40	930.00	13,088
5	**Eagle** - Microsoft NDv5, Xeon Platinum 8480C 48C 2GHz, NVIDIA H100, NVIDIA Infiniband NDR, Microsoft Azure Microsoft Azure United States	2,073,600	561.20	846.84	

ORNL Frontier

9472 AMD CPUs
37,888 AMD GPUs

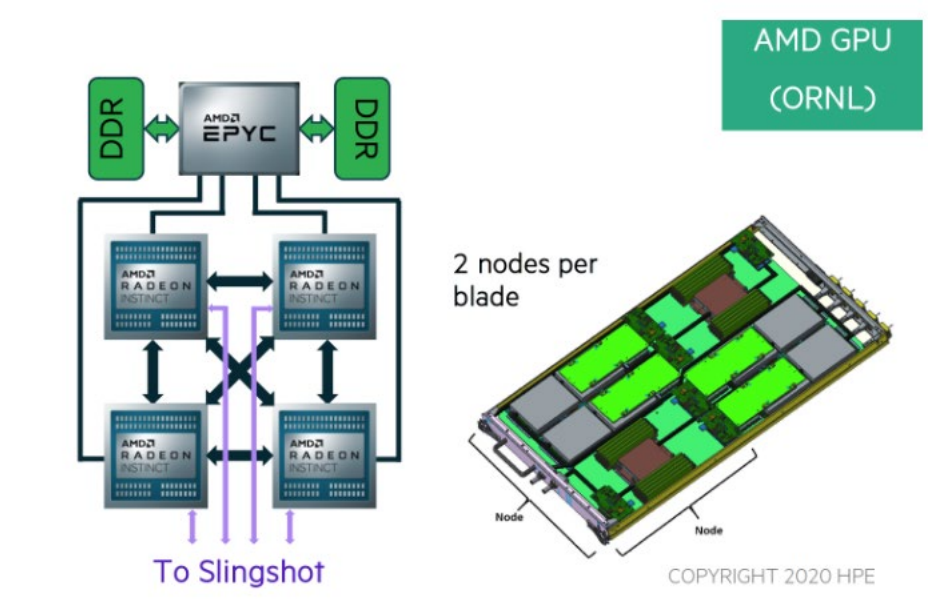

Blue Waters @ UIUC (2013-2021)

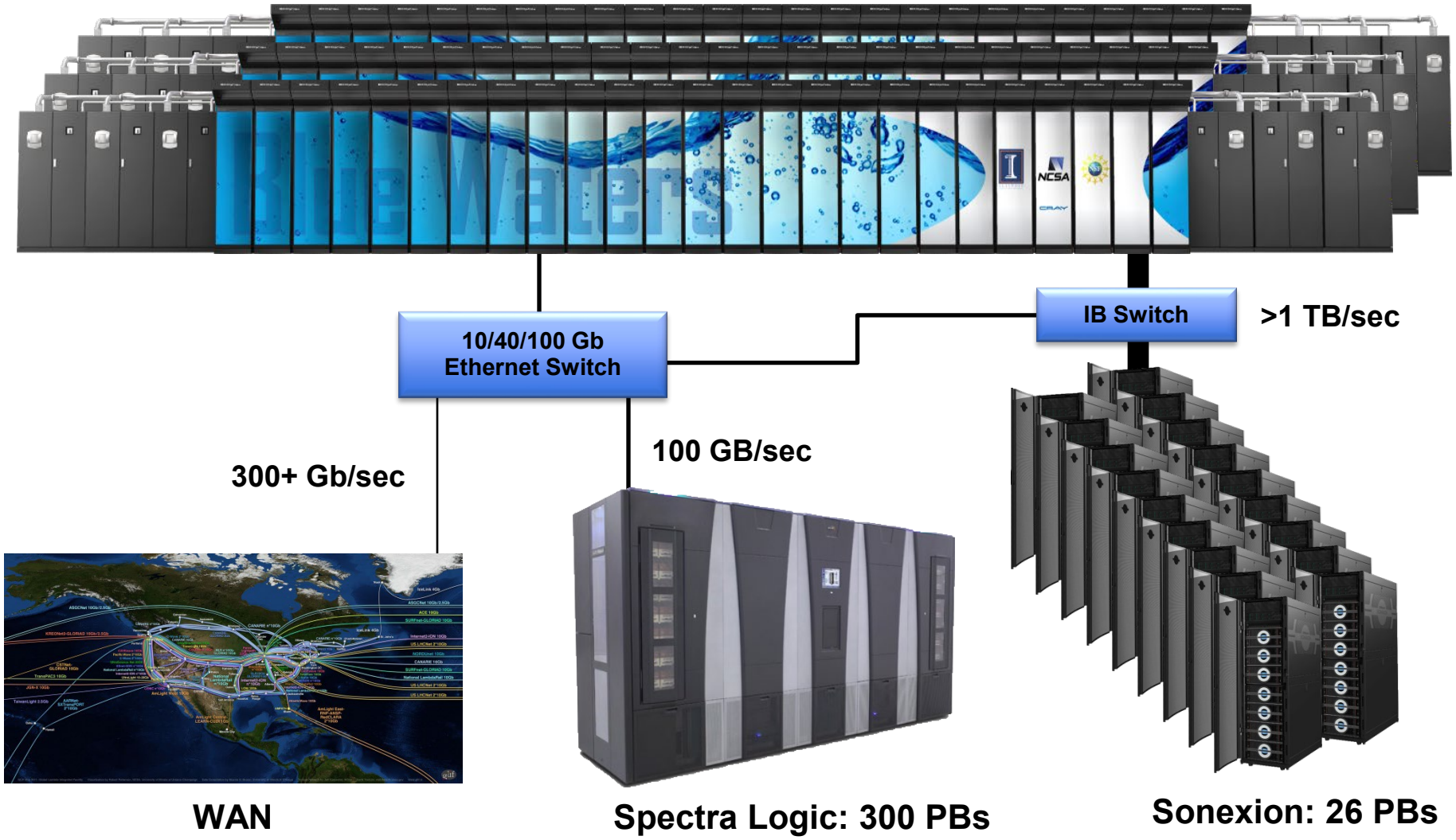

Delta

Hewlett Packard Enterprise
PIEB Group
SGCI
ChilledDoor
DELTA

Delta

CPU NODES	135 x CPU Compute Nodes 8 x CPU Utility Nodes
GPU NODES	100 x A100 x 4 GPU 100 x A40 x 4 GPU 6 x 8 A100 GPU & High Mem 1 8 AMD MI100 GPU & High Mem

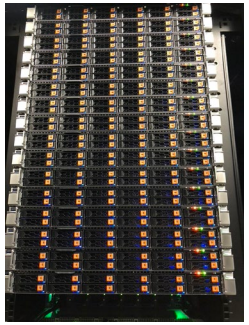

MODEL	DDN SFA 7990x
STORAGE	6 PB on Delta 1 PB on Center-wide FS 3PB Flash (Red/IME)
PERF	60 GB/sec for home + scratch, 500GB/s Flash

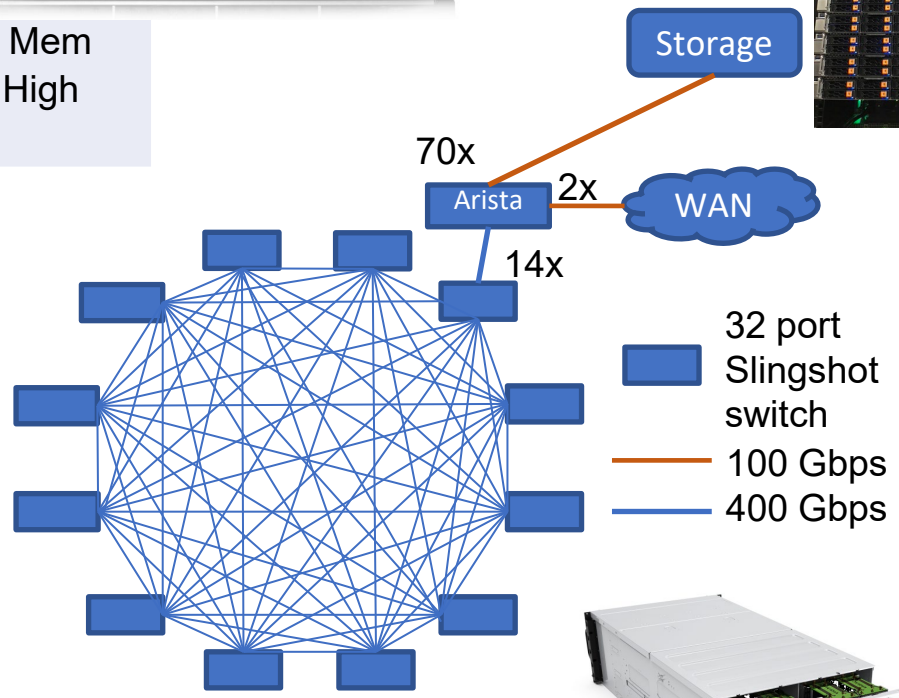

CPUs	500 x AMD EPYC 7763 64 core “Milan”
GPUs	448 x NVIDIA A100 400 x NVIDIA A40 8 x AMD MI100
PERF	10+ PF double-precision 100+ PF single-precision 200+ PF tensor

Hewlett Packard Enterprise

ddn

NVIDIA

AMD

Abstract CUDA-based Node

- Each node contains *N* GPUs

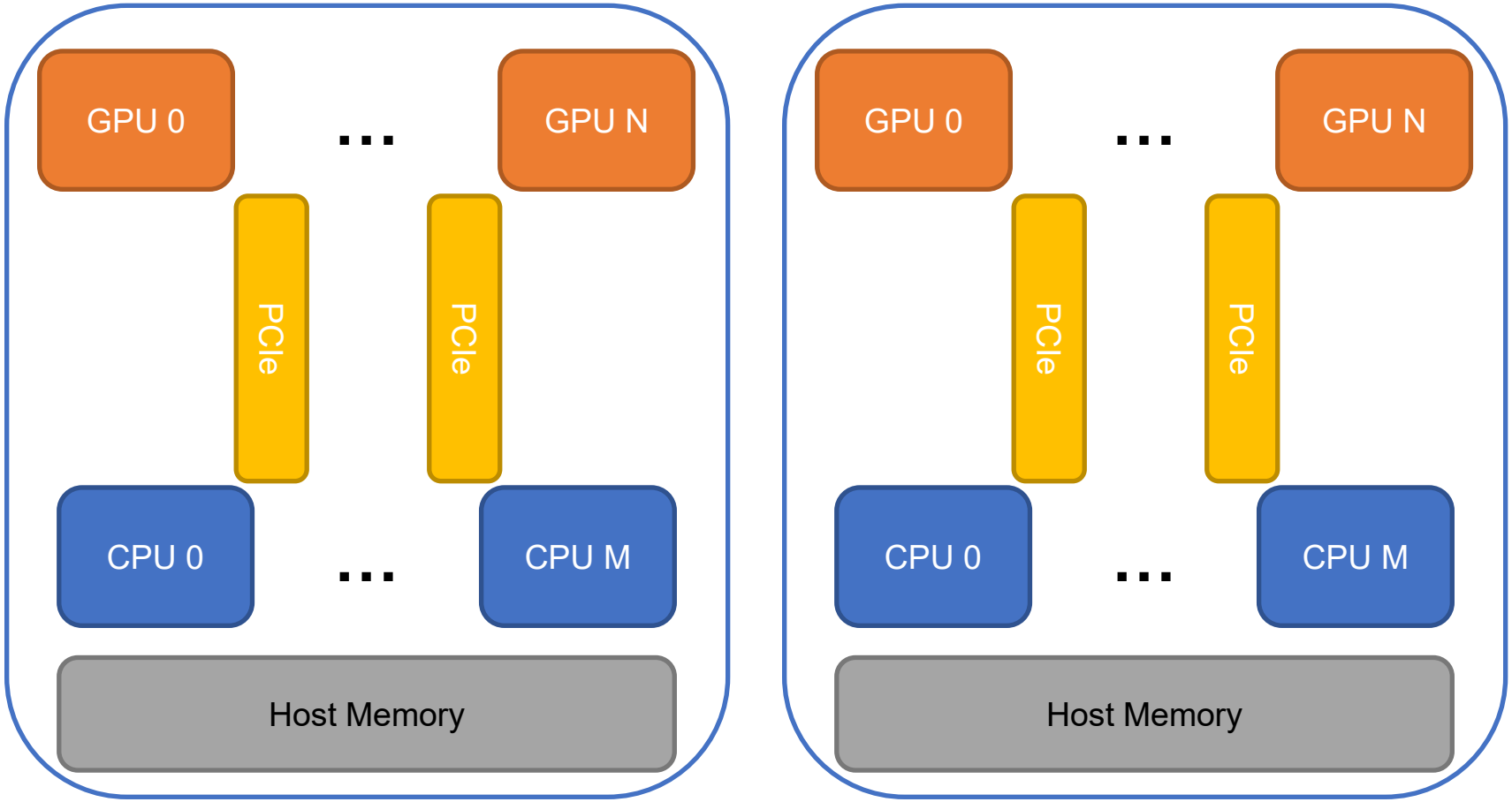

CUDA Support for Multiple GPUs

- **cudaSetDevice()** sets the current GPU
- Current GPU can be changed while async calls (kernels, memcopies) are running
  - It is also OK to queue up a bunch of async calls to a GPU and then switch to another GPU

```
cudaSetDevice( 0 );
kernel<<>>(...);
cudaMemcpyAsync(...);
cudaSetDevice( 1 );
kernel<<>>(...);
```

MPI Model

- Many processes distributed in a cluster

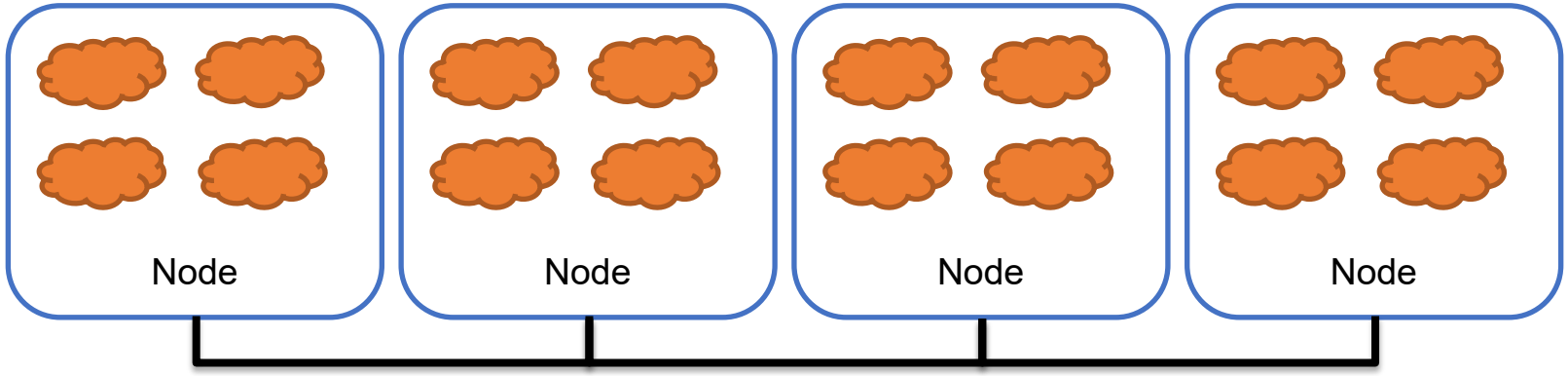

- Each process computes part of the output
- Processes communicate with each other through message passing (not global memory)
- Processes can synchronize through messages

MPI Initialization, Info

- **User launches an MPI job with X processes by executing in the command shell**
  - `MPIrun –np X`
- **`int MPI_Init(int *argc, char ***argv)`**
  - Initialize MPI
- **`MPI_COMM_WORLD`**
  - MPI group formed with all allocated nodes
- **`int MPI_Comm_rank(MPI_Comm comm, int *rank)`**
  - Rank of the calling process in group of comm
- **`int MPI_Comm_size(MPI_Comm comm, int *size)`**
  - Number of processes in the group of comm

Vector Addition: Main Process

```
int main(int argc, char *argv[]) {
   int vector_size = 1024 * 1024 * 1024;
   int pid=-1, np=-1;

   MPI_Init(&argc, &argv);
   MPI_Comm_rank(MPI_COMM_WORLD, &pid);
   MPI_Comm_size(MPI_COMM_WORLD, &np);

   if(np < 3) {
       if(0 == pid) printf("Nedded 3 or more processes.\n");
       MPI_Abort( MPI_COMM_WORLD, 1 ); return 1;
   }
   if(pid < np - 1)
       compute_node(vector_size / (np - 1));
   else
       data_server(vector_size);

   MPI_Finalize();
   return 0;
}
```

MPI Sending Data

- `int MPI_Send(void *buf, int count, MPI_Datatype datatype, int dest, int tag, MPI_Comm comm)`
  - buf: Starting address of send buffer
  - count: Number of elements in send buffer (nonnegative integer)
  - datatype: Datatype of each send buffer element
  - dest: Rank of destination (integer)
  - tag: Message tag (integer)
  - comm: Communicator (handle)

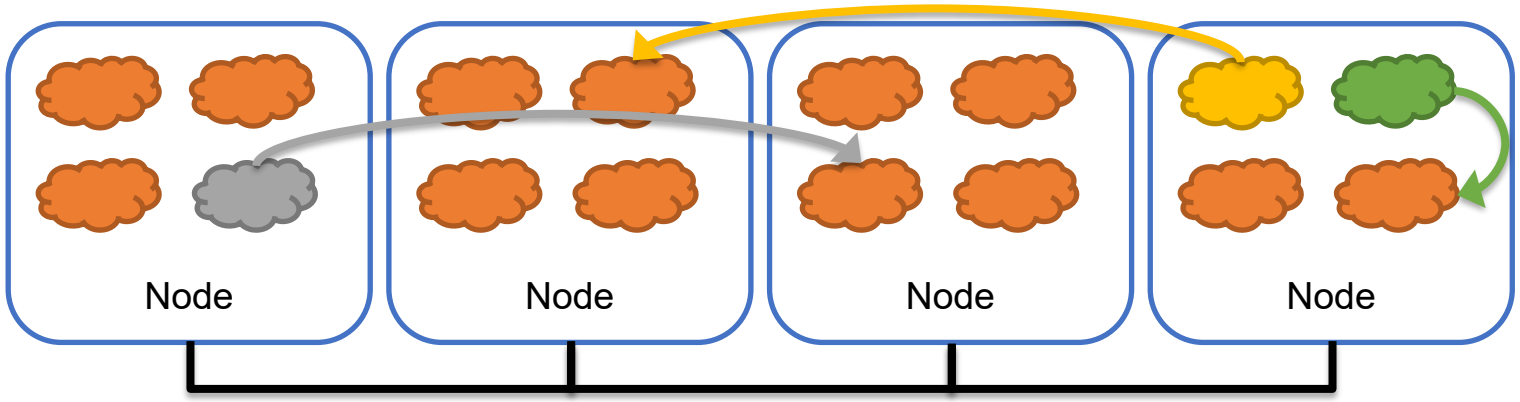

MPI Receiving Data

- `int MPI_Recv(void *buf, int count, MPI_Datatype datatype, int source, int tag, MPI_Comm comm, MPI_Status *status)`
  - buf: Starting address of receive buffer
  - count: Maximum number of elements in receive buffer (non-negative integer)
  - datatype: Datatype of each receive buffer element
  - source: Rank of source (integer)
  - tag: Message tag (integer)
  - comm: Communicator (handle)
  - status: Status object

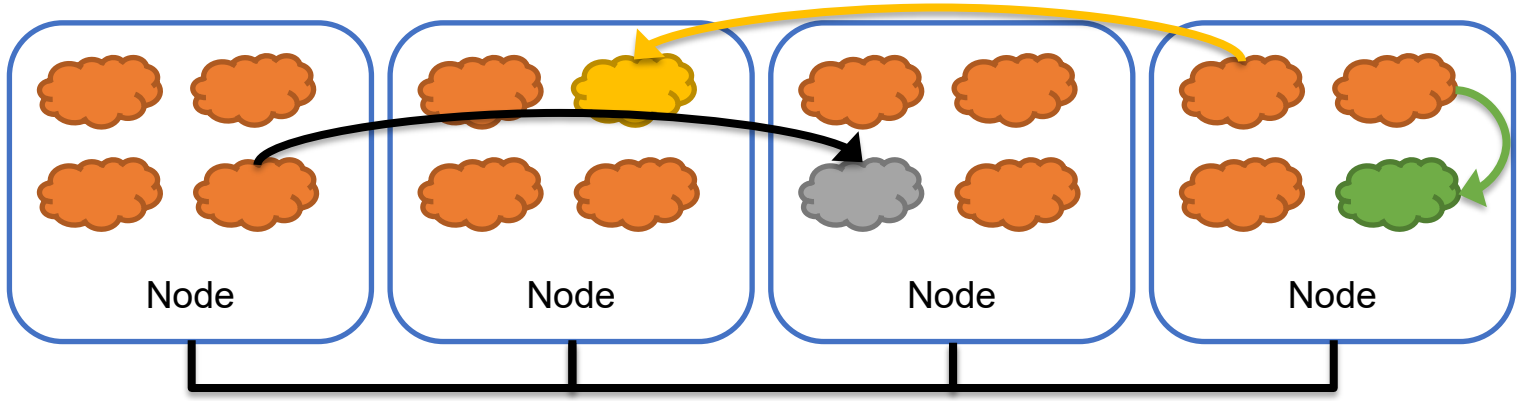

Vector Addition: Server Process (I)

```
void data_server(unsigned int vector_size) {
        int np, num_nodes = np – 1, first_node = 0, last_node = np - 2;
        unsigned int num_bytes  = vector_size * sizeof(float);
        float *input_a = 0, *input_b = 0, *output = 0;

        /* Set MPI Communication Size */
        MPI_Comm_size(MPI_COMM_WORLD, &np);

        /* Allocate input data */
        input_a = (float *)malloc(num_bytes);
        input_b = (float *)malloc(num_bytes);
        output = (float *)malloc(num_bytes);
        if(input_a == NULL || input_b == NULL || output == NULL) {
                printf("Server couldn't allocate memory\n");
                MPI_Abort( MPI_COMM_WORLD, 1 );
        }
        /* Initialize input data */
        random_data(input_a, vector_size , 1, 10);
        random_data(input_b, vector_size , 1, 10);
```

Vector Addition: Server Process (II)

```
/* Send data to compute nodes */
float *ptr_a = input_a;
float *ptr_b = input_b;

for (int process = 1; process < last_node; process++) {
    MPI_Send(ptr_a, vector_size / num_nodes, MPI_FLOAT,
            process, DATA_DISTRIBUTE, MPI_COMM_WORLD);
    ptr_a += vector_size / num_nodes;

    MPI_Send(ptr_b, vector_size / num_nodes, MPI_FLOAT,
            process, DATA_DISTRIBUTE, MPI_COMM_WORLD);
    ptr_b += vector_size / num_nodes;
}
```

Vector Addition: Server Process (III)

```
        /* Wait for compute to complete*/
        MPI_Barrier(MPI_COMM_WORLD);

        /* Collect output data */
        MPI_Status status;
        for (int process = 0; process < num_nodes; process++) {
                MPI_Recv(output + process * num_points / num_nodes,
                        num_points / num_comp_nodes, MPI_REAL, process,
                        DATA_COLLECT, MPI_COMM_WORLD, &status );
        }

        /* Store output data */
        store_output(output, dimx, dimy, dimz);

        /* Release resources */
        free(input);
        free(output);
}
```

Vector Addition: Compute Process (I)

```
void compute_node(unsigned int vector_size ) {
        int np;
        unsigned int num_bytes = vector_size * sizeof(float);
        float *input_a, *input_b, *output;
        MPI_Status status;

        MPI_Comm_size(MPI_COMM_WORLD, &np);
        int server_process = np - 1;

        /* Alloc host memory */
        input_a = (float *)malloc(num_bytes);
        input_b = (float *)malloc(num_bytes);
        output = (float *)malloc(num_bytes);

        /* Get the input data from server process */
        MPI_Recv(input_a, vector_size, MPI_FLOAT, server_process,
                        DATA_DISTRIBUTE, MPI_COMM_WORLD, &status);
        MPI_Recv(input_b, vector_size, MPI_FLOAT, server_process,
                        DATA_DISTRIBUTE, MPI_COMM_WORLD, &status);
```

Vector Addition: Compute Process (II)

```
    /* Compute the partial vector addition */
    for (int i = 0; i < vector_size; ++i) {
        output[i] = input_a[i] + input_b[i];
    }

    /* Or, can offload to GPU here */
    /* cudaMalloc(), cudaMemcpy(), kernel launch, etc. */

    MPI_Barrier(MPI_COMM_WORLD);

    /* Send the output */
    MPI_Send(output, vector_size, MPI_FLOAT,
           server_process, DATA_COLLECT, MPI_COMM_WORLD);

    /* Release memory */
    free(input_a);
    free(input_b);
    free(output);
}
```

Any More Questions?

Things to Read:

Textbook Chapter 20

https://developer.nvidia.com/intro-to-openacc-course-2016

Things to Do:

Project CP3

Lab 8