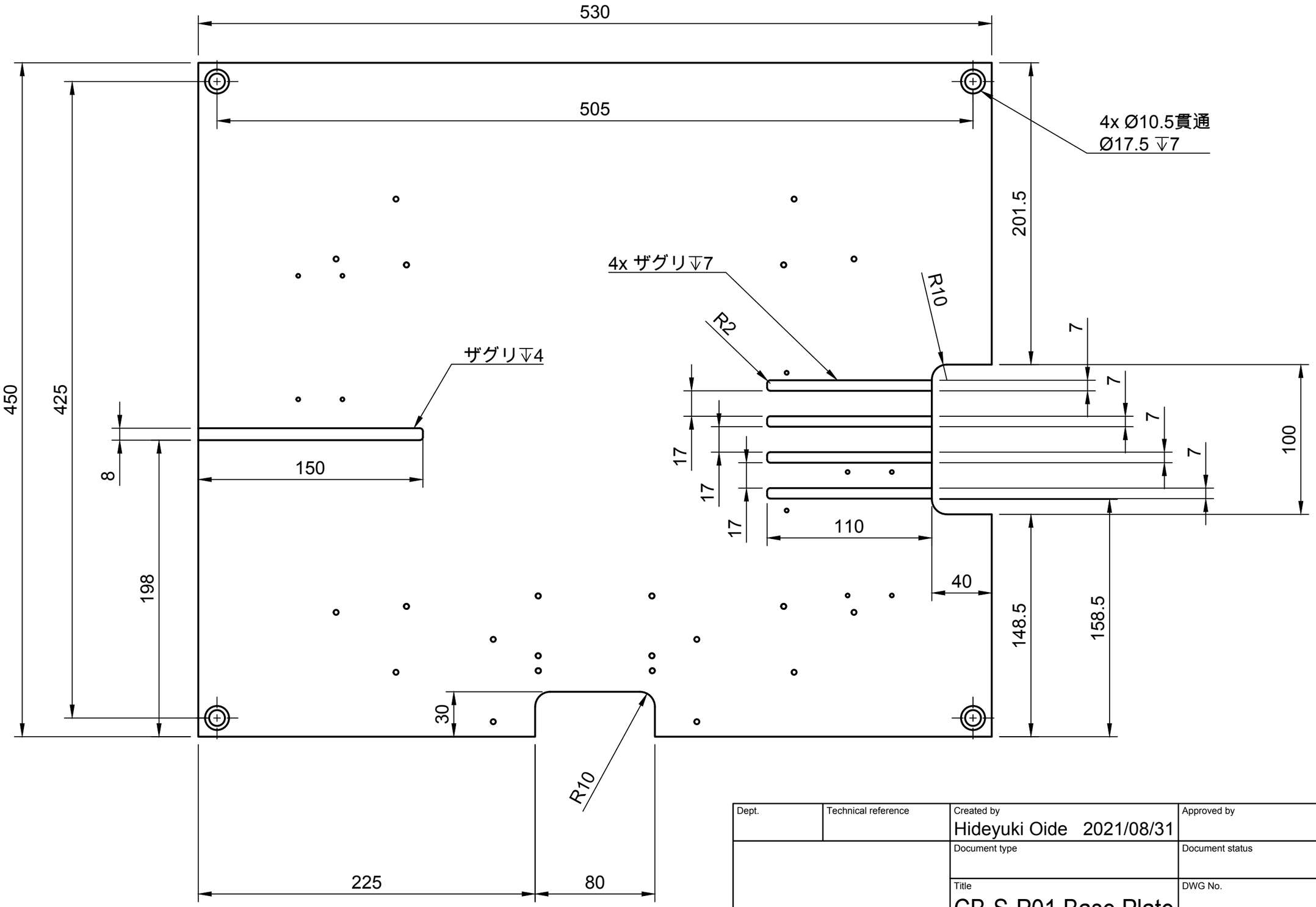

Dept.	Technical reference	Created by Hideyuki Oide 2021/08/31	Approved by
		Document type	Document status
		Title CB-S-P01 Base Plate	DWG No.
			Rev. / Date of issue / Sheet 1/3

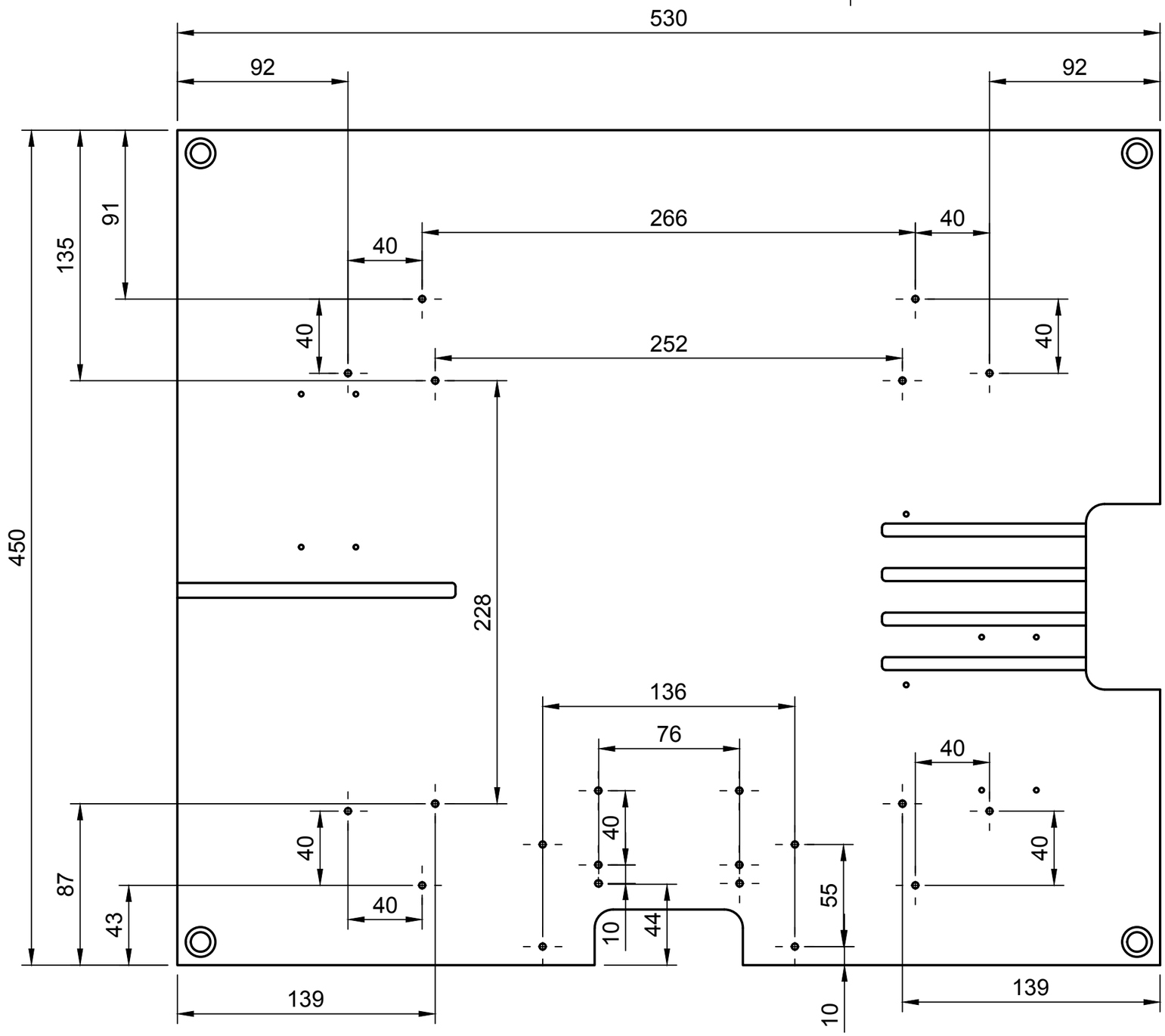

Dept.	Technical reference	Created by Hideyuki Oide 2021/08/31	Approved by
		Document type	Document status
		Title CB-S-P01 Base Plate M4タップ位置詳細 合計22箇所	DWG No.
			Rev. / Date of issue / Sheet 2/3

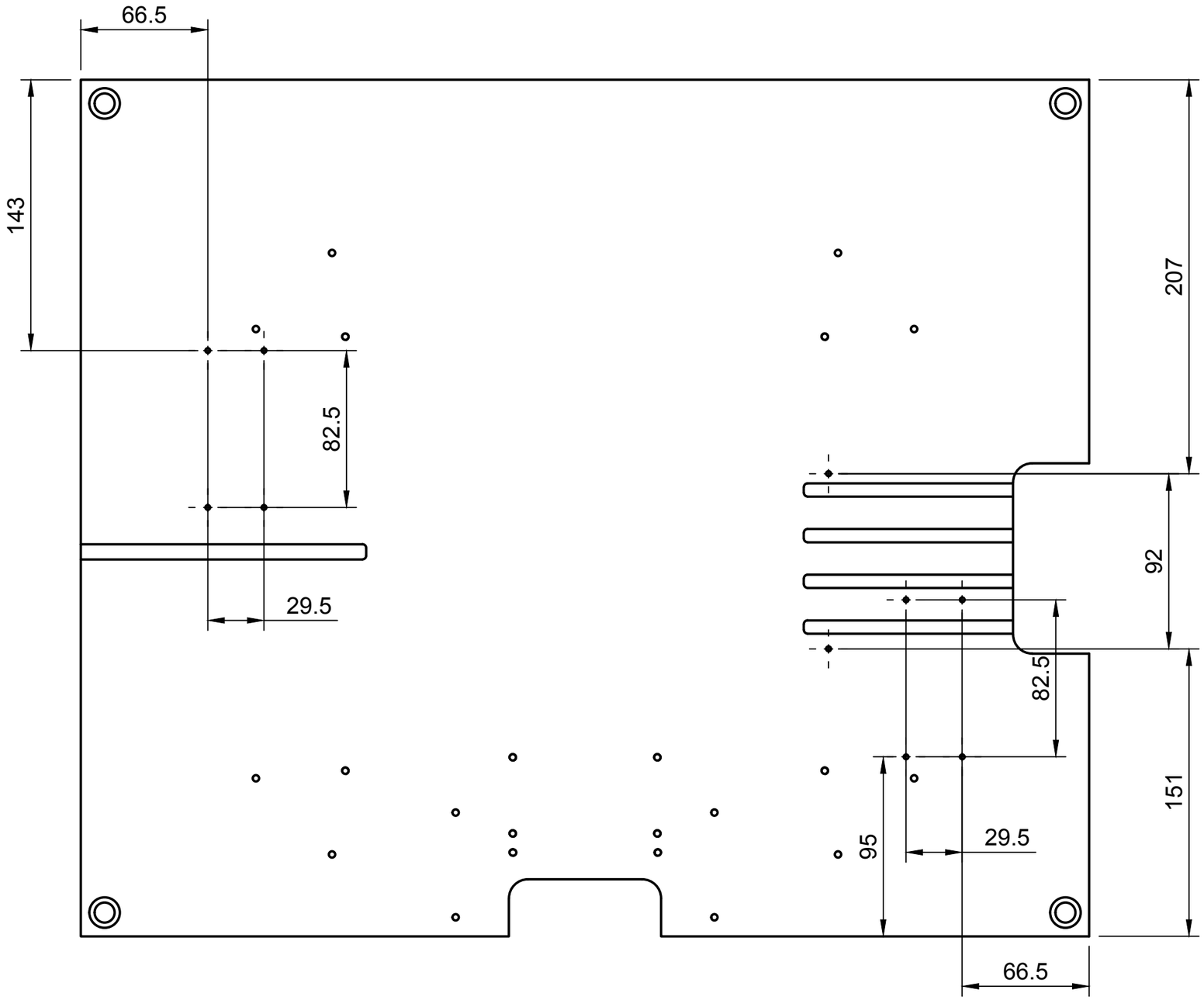

Dept.	Technical reference	Created by Hideyuki Oide 2021/08/31	Approved by
		Document type	Document status
		Title CB-S-P01 Base Plate M3タップ位置詳細 合計10箇所	DWG No. Rev. / Date of issue / Sheet 3/3