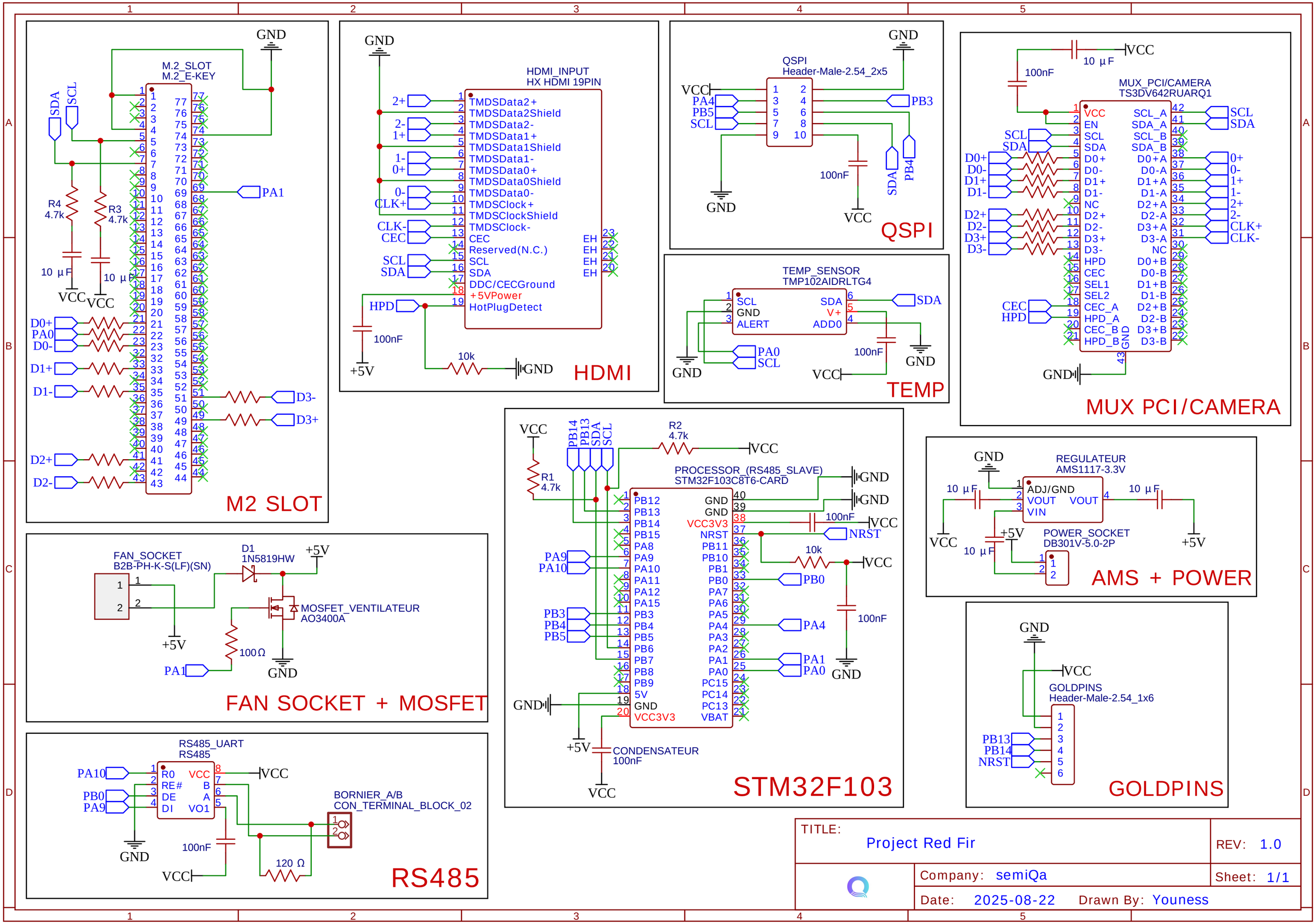
M2 SLOT
M.2_SLOT
M.2_E-KEY
HDMI
HDMI_INPUT
HX HDMI 19PIN
QSPI
QSPI
Header-Male-2.54_2x5
TEMP
TEMP_SENSOR
TMP102AIDRLTG4
MUX PCI/CAMERA
MUX_PCI/CAMERA
TS3DV642RUARQ1
STM32F103
PROCESSOR_(RS485_SLAVE)
STM32F103C8T6-CARD
AMS + POWER
REGULATEUR
AMS1117-3.3V
POWER_SOCKET
DB301V-5.0-2P
GOLDPINS
GOLDPINS
Header-Male-2.54_1x6
FAN SOCKET + MOSFET
FAN_SOCKET
B2B-PH-K-S(LF)(SN)
MOSFET_VENTILATEUR
AO3400A
RS485
RS485_UART
RS485
BORNIER_A/B
CON_TERMINAL_BLOCK_02
TITLE:
Project Red Fir
REV: 1.0
Company: semiQa
Sheet: 1/1
Date: 2025-08-22
Drawn By: Youness