EVBox Elvi socket

Installation and user manual Part B

EVBox Elvi
socket

Installation and user manual
Part B

EN

Contents

1. Unpacking 3
2. Install the wall dock 5
3. Install station 11
4. Remove the station 12

EN

EN

1. Unpacking

1

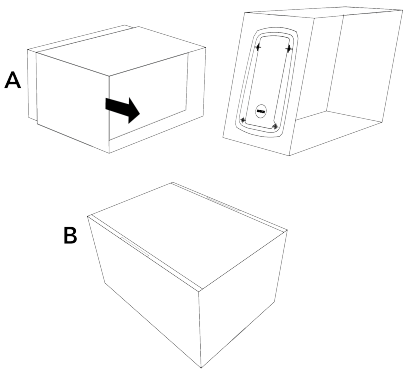

2

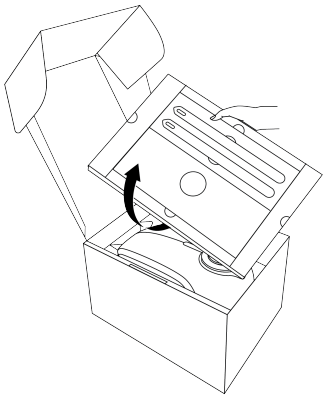

3

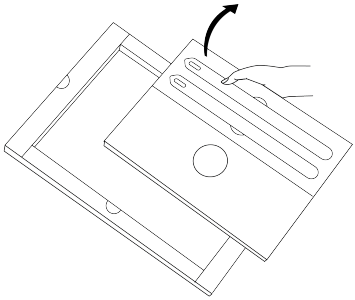

4

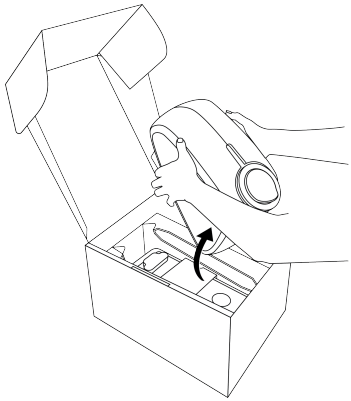

5

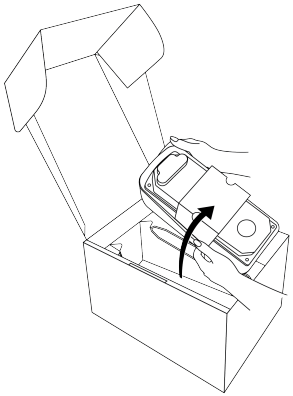

6

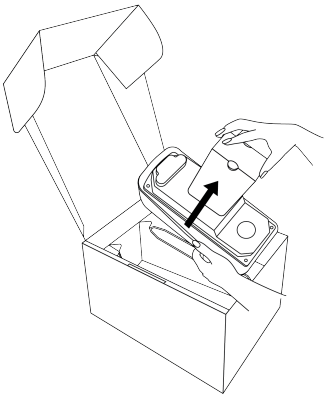

7

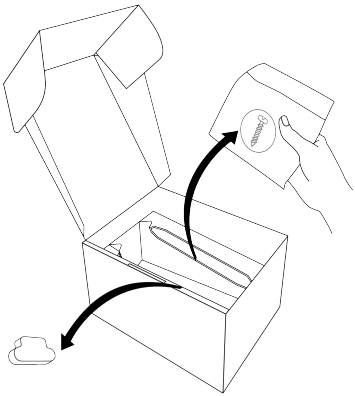

2. Install the wall dock

1a

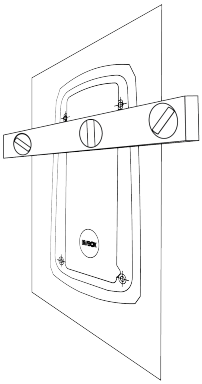

1b

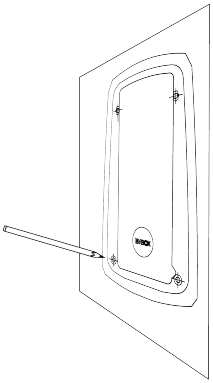

1c

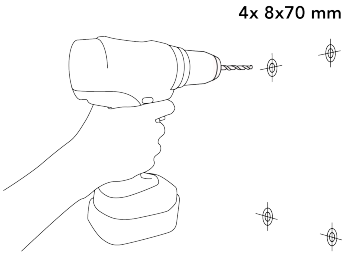

1d

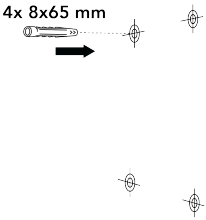

1e

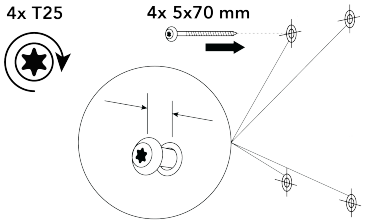

2a

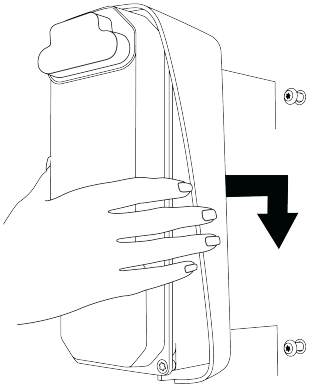

2b

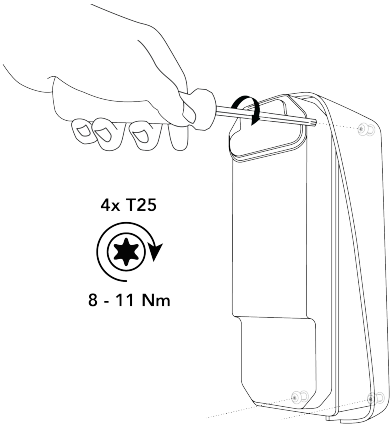

3

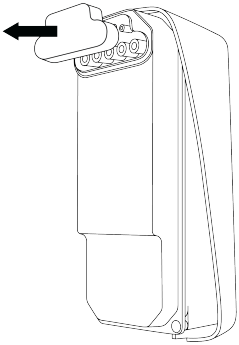

4

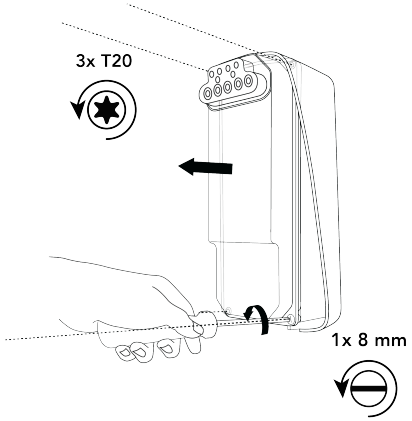

5b

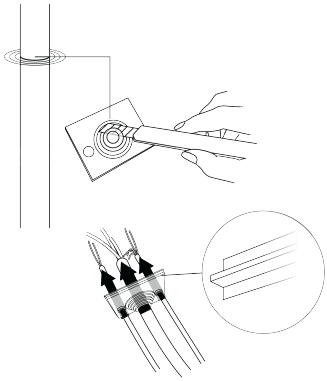

7a

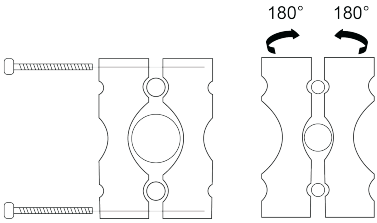

7b

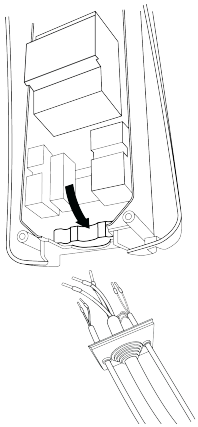

7c

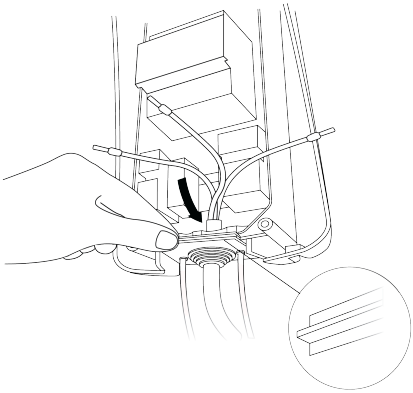

7d

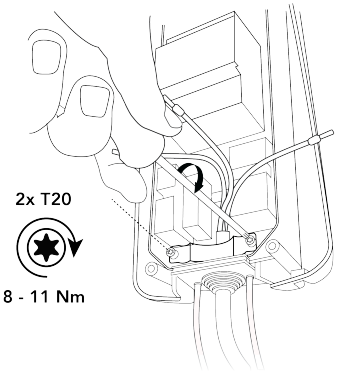

8a

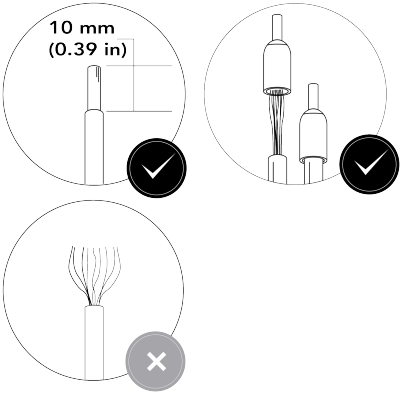

8b

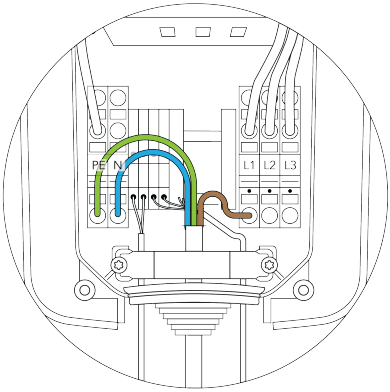

9a

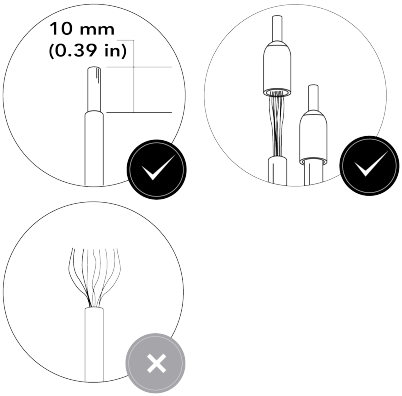

9b

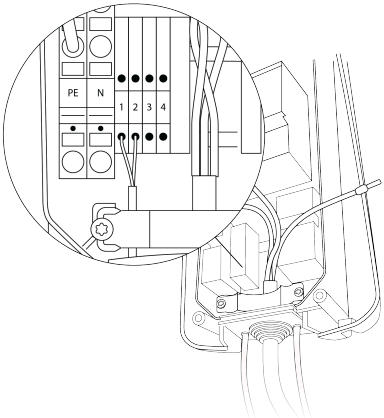

10a

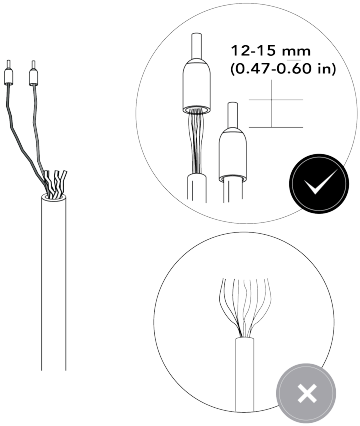

10b

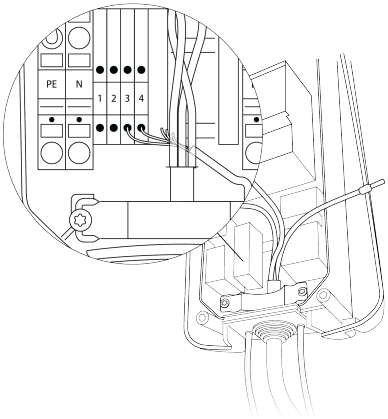

11

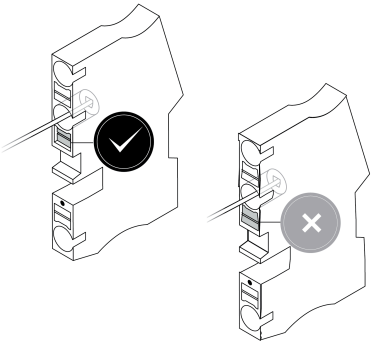

12b

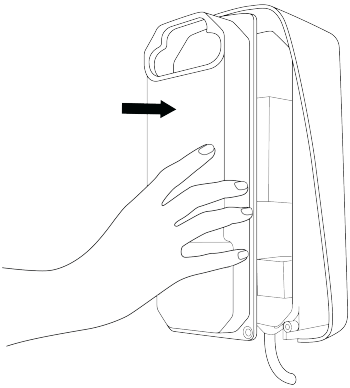

12c

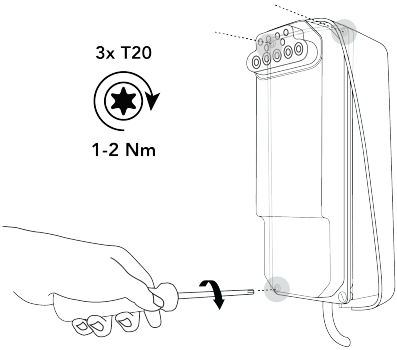

12d

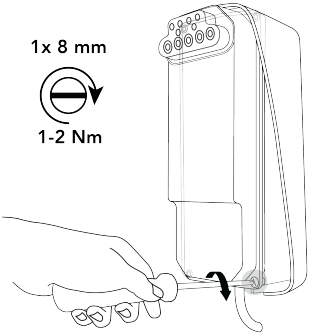

EN

3. Install station

1

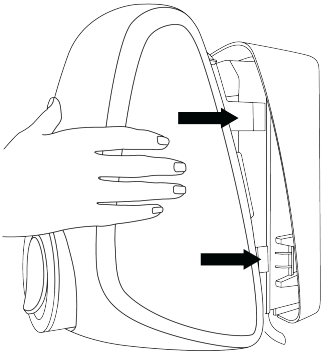

2

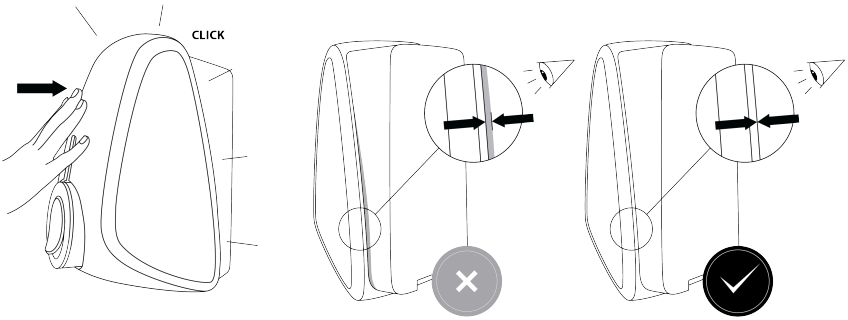

4. Remove the station

2

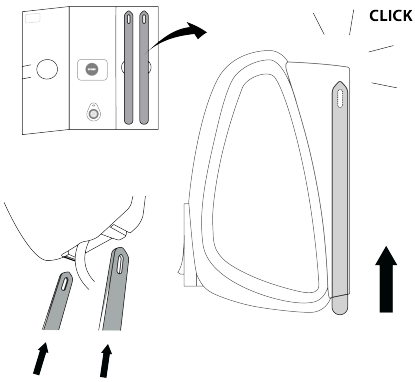

3

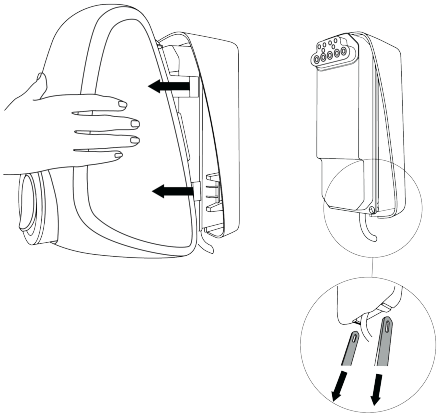

4

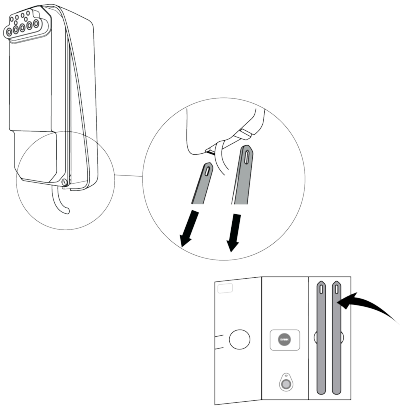

EVBIM_062022. Version 1.0 © EVBox Manufacturing B.V.