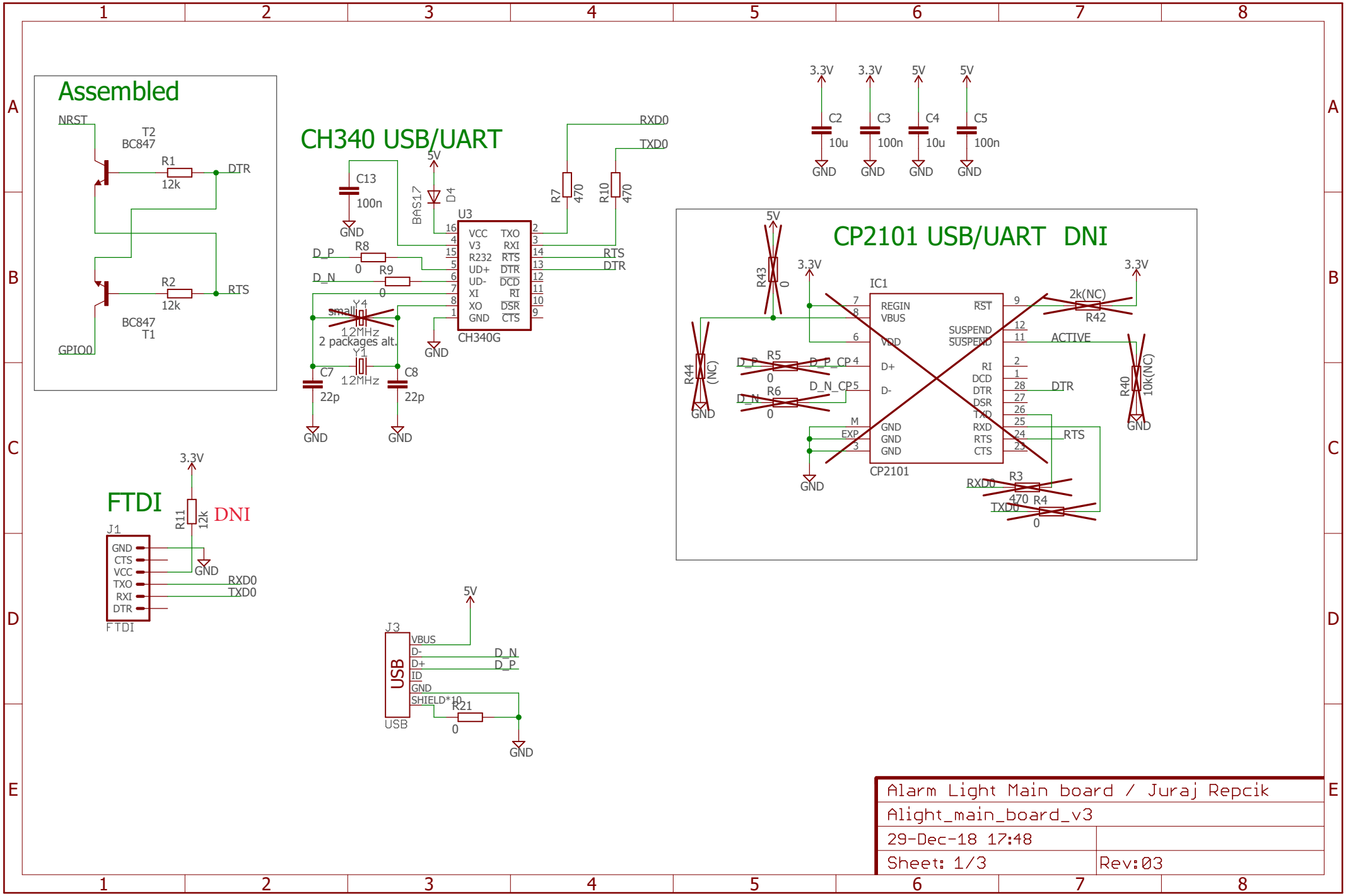

Alarm Light Main board / Juraj Repcik	
Alight_main_board_v3	
29-Dec-18 17:48	
Sheet: 1/3	Rev:03

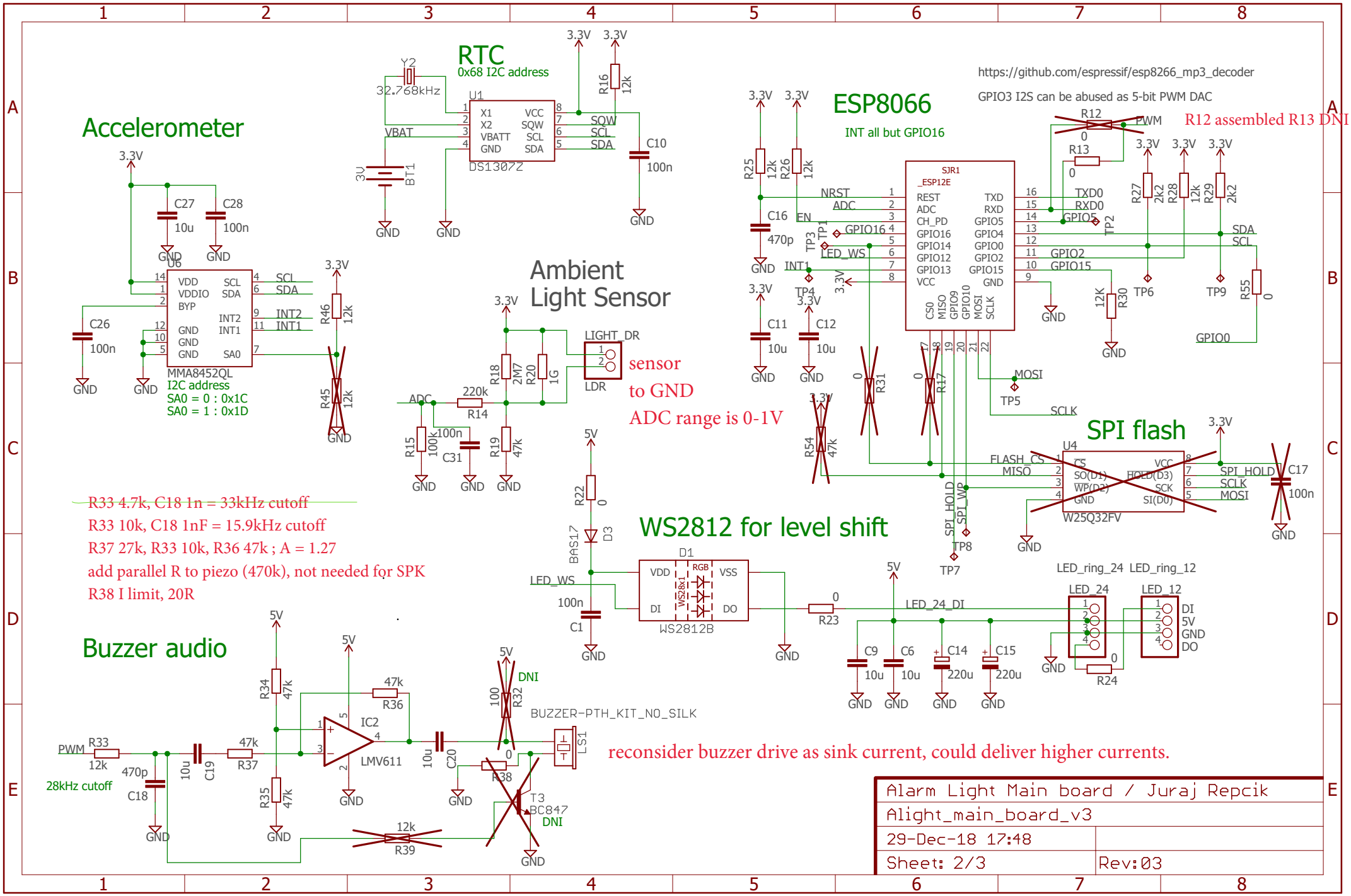
RTC
0x68 I2C address
Y2
32.768kHz
U1
DS1307Z
X1
X2
VBATT
GND
VCC
SQW
SCL
SDA
VBAT
BT1
3V
R16
12k
C10
100n
3.3V
GND
Accelerometer
U6
VDD
VDDIO
BYP
GND
GND
GND
SCL
SDA
INT2
INT1
SA0
C27
10u
C28
100n
C26
100n
R46
12k
R45
12k
MMA8452QL
I2C address
SA0 = 0 : 0x1C
SA0 = 1 : 0x1D
Ambient
Light Sensor
LIGHT_DR
LDR
R18
2M7
R20
1G
R14
220k
R15
100k
C31
100n
R19
47k
ADC
sensor
to GND
ADC range is 0-1V
ESP8066
INT all but GPIO16
https://github.com/espressif/esp8266_mp3_decoder
GPIO3 I2S can be abused as 5-bit PWM DAC
R12 assembled R13 DNI
SJR1
_ESP12E
REST
ADC
CH_PD
GPIO16
GPIO14
GPIO12
GPIO13
VCC
TXD
RXD
GPIO5
GPIO4
GPIO0
GPIO2
GPIO15
GND
CS0
MISO
GPIO9
GPIO10
MOSI
SCLK
NRST
EN
LED_WS
INT1
TXD0
RXD0
GPIO5
GPIO2
GPIO15
GPIO0
MOSI
SCLK
R25
12k
R26
12k
C16
470p
C11
10u
C12
10u
R31
R17
R54
47k
R12
0
R13
0
R27
2k2
R28
12k
R29
2k2
R30
12k
R55
0
TP1
TP2
TP3
TP4
TP5
TP6
TP9
SPI flash
U4
W25Q32FV
CS
SO(D1)
WP(D2)
GND
VCC
HOLD(D3)
SCK
SI(D0)
FLASH_CS
MISO
SPI_HOLD
SPI_WP
SCLK
MOSI
C17
100n
TP7
TP8
R22
0
D3
BAS17
LED_WS
100n
C1
WS2812 for level shift
D1
WS2812B
VDD
DI
VSS
DO
RGB
R23
0
LED_24_DI
LED_ring_24
LED_ring_12
LED_24
LED_12
DI
5V
GND
DO
R24
0
C9
10u
C6
10u
C14
220u
C15
220u
R33 4.7k, C18 1n = 33kHz cutoff
R33 10k, C18 1nF = 15.9kHz cutoff
R37 27k, R33 10k, R36 47k ; A = 1.27
add parallel R to piezo (470k), not needed for SPK
R38 I limit, 20R
Buzzer audio
PWM
R33
12k
470p
C18
28kHz cutoff
10u
C19
R37
47k
R34
47k
R35
47k
R36
47k
IC2
LMV611
10u
C20
R32
100
DNI
R38
0
BUZZER-PTH_KIT_NO_SILK
LS1
T3
BC847
DNI
R39
12k
reconsider buzzer drive as sink current, could deliver higher currents.
Alarm Light Main board / Juraj Repcik
Alight_main_board_v3
29-Dec-18 17:48
Sheet: 2/3
Rev:03

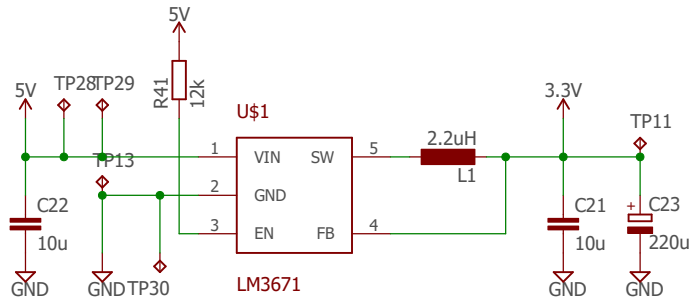

add divider to FB
resistors and paralell C
if LM3671-ADJ was used.

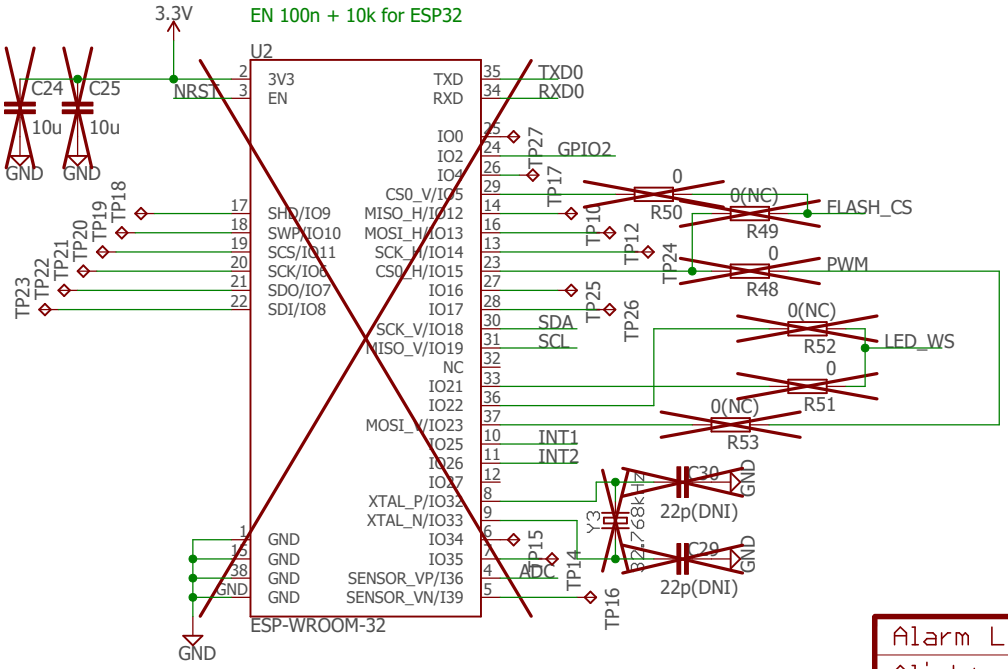

Alarm Light Main board / Juraj Repcik	
Alight_main_board_v3	
29-Dec-18 17:48	
Sheet: 3/3	Rev:03