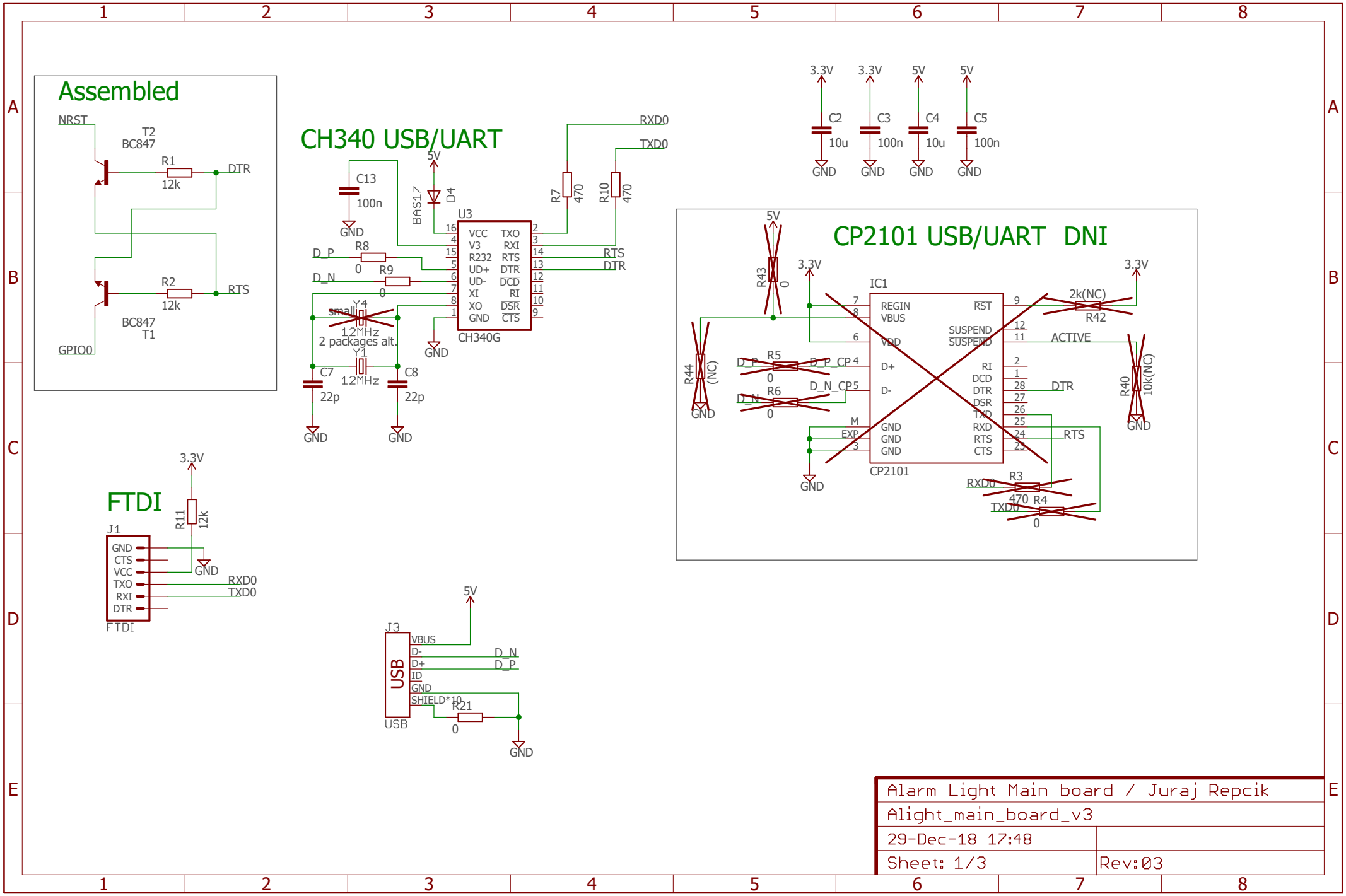

Alarm Light Main board / Juraj Repcik	
Alight_main_board_v3	
29-Dec-18 17:48	
Sheet: 1/3	Rev:03

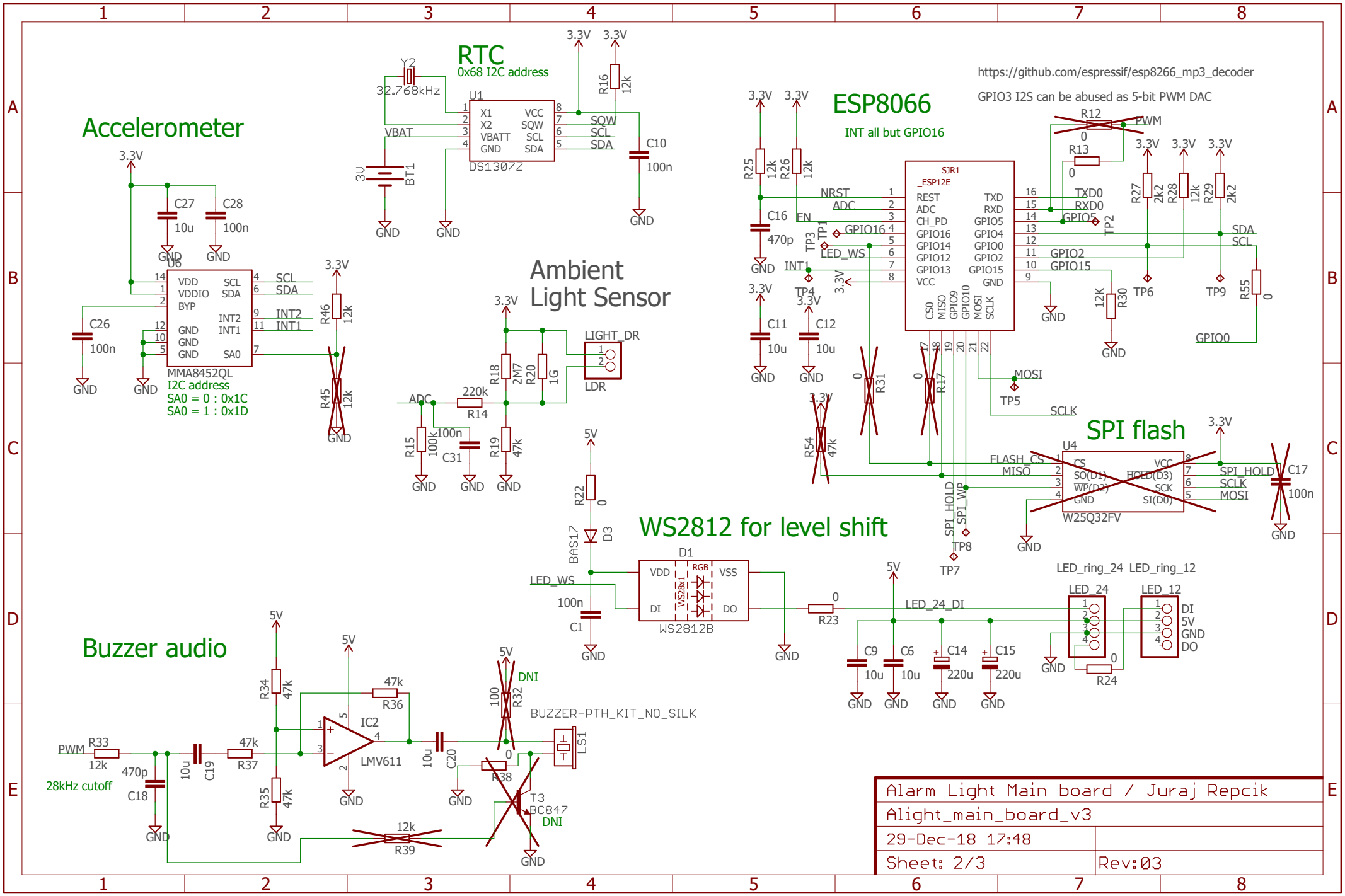
RTC
0x68 I2C address
Y2
32.768kHz
U1
DS1307Z
X1
X2
VBATT
GND
VCC
SQW
SCL
SDA
VBAT
BT1
3V
R16
12k
C10
100n
3.3V
GND
Accelerometer
U6
MMA8452QL
VDD
VDDIO
BYP
GND
SCL
SDA
INT2
INT1
SA0
C27
10u
C28
100n
C26
R46
R45
I2C address
SA0 = 0 : 0x1C
SA0 = 1 : 0x1D
Ambient
Light Sensor
LIGHT_DR
LDR
R18
2M7
R20
1G
R14
220k
R15
100k
C31
100n
R19
47k
ADC
ESP8066
INT all but GPIO16
https://github.com/espressif/esp8266_mp3_decoder
GPIO3 I2S can be abused as 5-bit PWM DAC
SJR1
_ESP12E
REST
CH_PD
GPIO16
GPIO14
GPIO12
GPIO13
TXD
RXD
GPIO5
GPIO4
GPIO0
GPIO2
GPIO15
NRST
EN
LED_WS
INT1
TXD0
RXD0
PWM
R12
R13
R25
R26
C16
470p
C11
10u
C12
R27
2k2
R28
R29
R30
12K
R55
TP1
TP2
TP3
TP4
TP5
TP6
TP7
TP8
TP9
MOSI
SCLK
SPI_HOLD
SPI_WP
R31
R17
R54
47k
SPI flash
U4
W25Q32FV
FLASH_CS
MISO
SPI_HOLD
SCLK
MOSI
C17
100n
WS2812 for level shift
D1
WS2812B
VDD
DI
RGB
VSS
DO
R22
D3
BAS17
LED_WS
C1
R23
LED_24_DI
LED_ring_24
LED_ring_12
LED_24
LED_12
DI
5V
GND
DO
C9
10u
C6
10u
C14
220u
C15
220u
R24
Buzzer audio
PWM
R33
12k
470p
C18
28kHz cutoff
C19
R37
47k
R34
R35
IC2
LMV611
R36
C20
R32
DNI
BUZZER-PTH_KIT_NO_SILK
LS1
R38
T3
BC847
R39
Alarm Light Main board / Juraj Repcik
Alight_main_board_v3
29-Dec-18 17:48
Sheet: 2/3
Rev:03

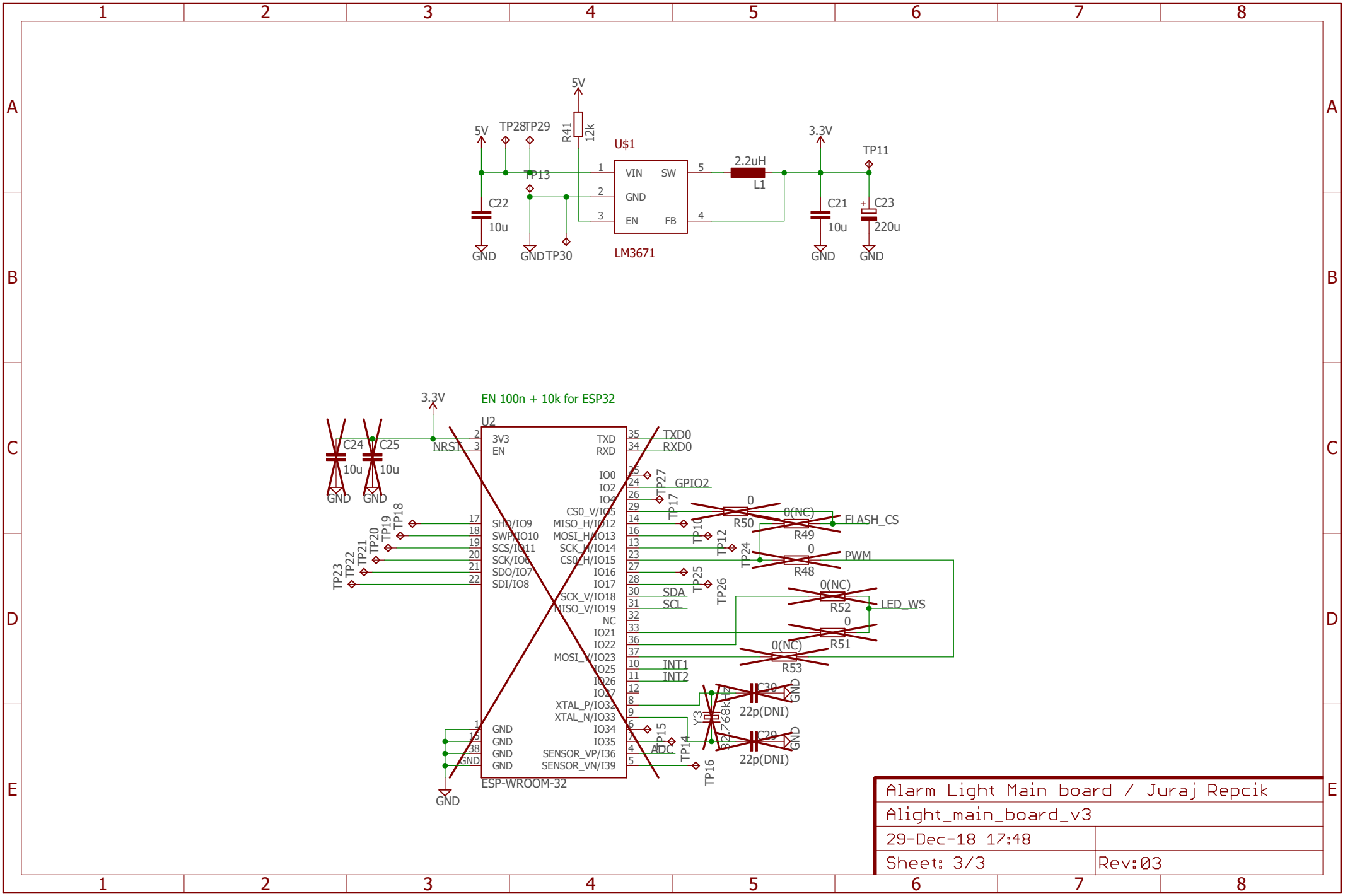
5V
TP28
TP29
R41
12k
U$1
VIN
SW
GND
EN
FB
LM3671
TP13
C22
10u
GND
TP30
2.2uH
L1
3.3V
TP11
C21
10u
C23
220u
EN 100n + 10k for ESP32
U2
C24
C25
NRST
3V3
EN
TXD
RXD
TXD0
RXD0
GPIO2
FLASH_CS
PWM
LED_WS
SDA
SCL
INT1
INT2
ADC
SHD/IO9
SWP/IO10
SCS/IO11
SCK/IO6
SDO/IO7
SDI/IO8
SENSOR_VP/I36
SENSOR_VN/I39
XTAL_P/IO32
XTAL_N/IO33
ESP-WROOM-32
R50
R49
R48
R52
R51
R53
0(NC)
C30
C29
22p(DNI)
Y3
32.768kHz
Alarm Light Main board / Juraj Repcik
Alight_main_board_v3
29-Dec-18 17:48
Sheet: 3/3
Rev:03