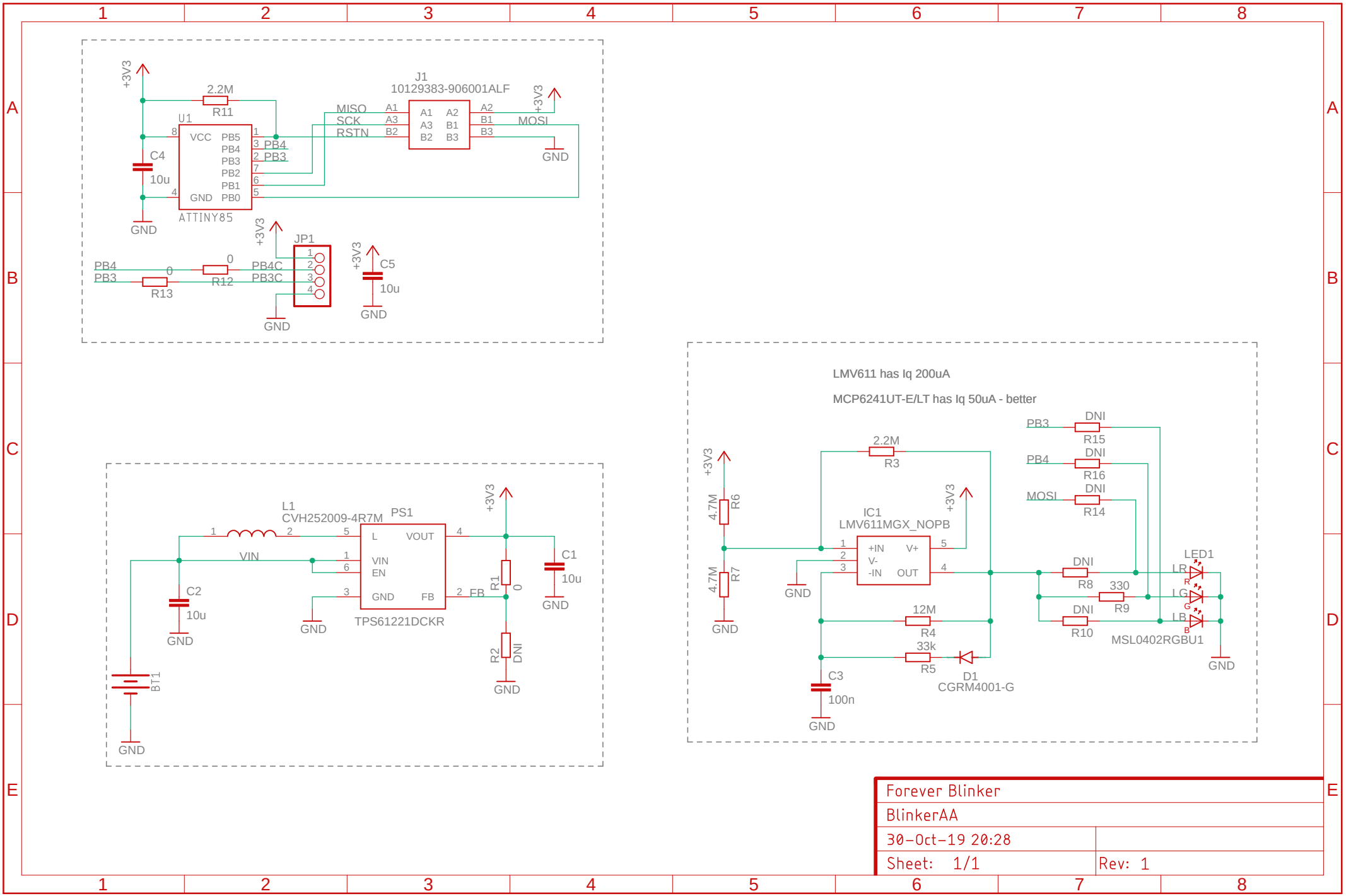
+3V3
2.2M
R11
U1
VCC
PB5
PB4
PB3
PB2
PB1
GND
PB0
ATTINY85
C4
10u
GND
J1
10129383-906001ALF
MISO
SCK
RSTN
A1
A3
B2
A2
B1
B3
MOSI
PB4
PB3
JP1
PB4C
PB3C
R12
R13
C5
10u
LMV611 has Iq 200uA
MCP6241UT-E/LT has Iq 50uA - better
IC1
LMV611MGX_NOPB
+IN
V-
-IN
V+
OUT
R3
R6
R7
4.7M
R15
R16
R14
DNI
R8
R9
R10
330
LED1
MSL0402RGBU1
R4
12M
R5
33k
D1
CGRM4001-G
C3
100n
L1
CVH252009-4R7M
PS1
L
VIN
EN
VOUT
FB
TPS61221DCKR
C1
C2
R1
R2
BT1
Forever Blinker
BlinkerAA
30-Oct-19 20:28
Sheet: 1/1
Rev: 1