Project Title: MIPS Datapath Implementation Using Verilog

Objective

To design and implement the MIPS Datapath (as shown in the diagram below) using Verilog, following the behavioral modeling approach. The project focuses on designing the Datapath without the control unit and delivering the following:

1. **Verilog Module**: A fully functional implementation of the MIPS Datapath without the control unit.
2. **Testbench**: A Verilog testbench containing test cases to verify the functionality of the Datapath.

MIPS Datapath Diagram

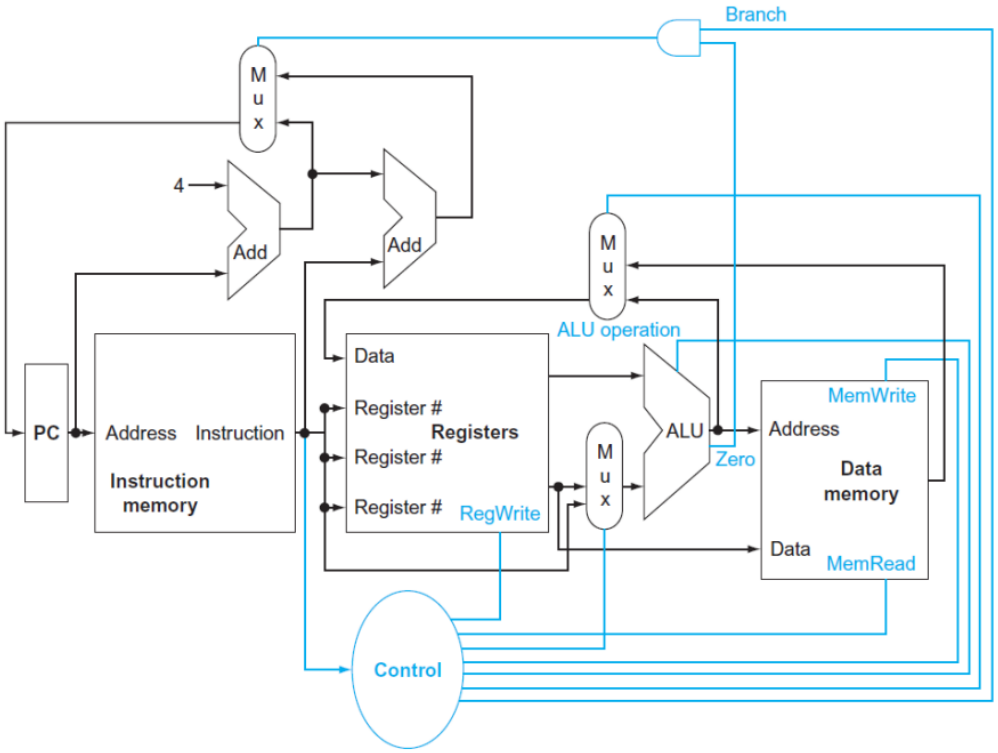

Requirements

1. **Datapath Implementation**:
    - Design the Datapath without including the control unit.
    - Ensure that all components, such as the ALU, register file, memories, and multiplexers, are implemented correctly and interconnected as per the diagram.
2. **Control Signal Handling**:
    - Without a control unit, control signals must be manually assigned for each instruction.
    - For example, specify ALU operation, register selection, and memory read/write signals in the testbench.
3. **Instruction Types**:
    - Implement all three instruction types:
        - **Arithmetic/Logical Instructions** (e.g., ADD, SUB, AND, OR).
        - **Branching Instructions** (e.g., BEQ).
        - **Load/Store Instructions** (e.g., LW, SW).
    - Manually write these instructions into the instruction memory as your starting point.
4. **Testbench**:
    - Develop a testbench with sufficient test cases to verify the correct execution of all three instruction types.
    - Ensure the testbench specifies the control signals for each instruction and simulates the results for validation.
    - Output the results to verify the Datapath's functionality.

Key Considerations

- **Manual Control**: In the absence of a control unit, the testbench will act as the source for control signals, meaning the design will be limited to specific instructions.
- **Instruction Memory Setup**: Students must manually write the instructions (in binary format) into the instruction memory as the starting point for simulation.
- **Modularity**: Ensure that each module of the Datapath (e.g., ALU, memory, multiplexers) is designed independently and tested before integration.
- **Comprehensive Testing**: Verify all three instruction types using simulation results.

Deliverables

1. Verilog code for the Datapath design.
2. Verilog testbench with detailed test cases covering:
    - Arithmetic/Logical instructions.
    - Branching instructions.
    - Load/Store instructions.
3. Simulation results showcasing the correct execution of each instruction type.

Note: Implementing the MIPS Datapath without a control unit simplifies the project but also limits its scope. Ensure that the testbench is comprehensive enough to cover all required functionalities.