© Siemens AG 2025

Overview

SITRANS LR150 is a compact radar transmitter for continuous level measurement of liquids, slurries, and solids to a range of 15 m (49.2 ft).

Benefits

- Bluetooth connectivity for easy setup with SITRANS mobile IQ.
- Optional HMI with pushbutton programming and local diagnostic data.
- Chemically resistant PVDF sensor.
- HART 7.0 communication for intelligent integration into your application.
- W band FMCW radar yields narrow beam with small antenna for superior performance in short range applications.
- Approved for open air applications outside of a tank.
- 2 mm accuracy and zero near range distance yields optimum inventory management capability.
- Compact design fits in limited space installations.
- Hazardous area variants available for safe use in explosive gas or dust environments.

Application

SITRANS LR150 is a W band FMCW radar level transmitter, with a chemically resistant PVDF sensor, for years of trouble-free, reliable measurement service.

4 to 20 mA loop powered with HART, providing accurate level measurement to ranges of 15 m (49.2 ft). Measurement is possible, non-intrusively, through plastic vessel tops for easy installation. Programming is convenient using the Bluetooth connection and SITRANS mobile IQ application on your smart device or locally with an optional HMI.

© Siemens AG 2025

Selection and ordering data

SITRANS LR150 Radar level transmitter Non-contact, HART, 15 m (49.2 ft) range, for liquids and solids.	Article No. 7ML534 0 - ● A ● 0 7 - 4 ● ● ●
Click on the Article No. for the online configuration in the PIA Life Cycle Portal.	
Bluetooth function	
Without	0
With	1
Process connection	
1-½" NPT	A
R 1-½" (BSPT)	B
G 1-½" (BSPP)	C
Type of protection	
Ordinary Locations/General Purpose (Non-Ex)[2]	A
ATEX II 1G, 1/2G Ex ia IIC T4 Ga, Ga/Gb; Gas Ex-Zone 0/Class 1, Div. 1 & Div. 2[1]	C
Electrical connections/cable entry	
M20	F
½" NPT	K
Local HMI	
Without display (closed lid of PBT/PC material)	0
With display (closed lid of PBT/PC material)	1
With display (clear lid with plastic window of PC material)	3

Selection and Ordering data	Order code
Further designs	
Please add "**-Z**" to Article No. and specify Order code(s).	
Tag (device parameter, max. 32 characters) plate stainless steel 304/1.4301	**Y15**
Inspection certificate 3.1 (EN 10204) - device with test data	**C25**
INMETRO, IA MASC	**E25**
NEPSI, CCOE	**E27**
EACEx	**E24**
ATEX, IECEx, $_{C}FM_{US}$, $_{C}CSA_{US}$	**E49**
CSA-Japan-Ex	**E29**
WHG and VLAREM II	**E61**
NSF 61 Drinking Water and FDA, EG1935/2004	**E84**

Accessories	Article No.
Operating Instructions	
All literature is available to download for free, in a range of languages, at http://www.siemens.com/processinstrumentation/documentation	
Accessories	
Bracket, 316L Stainless steel, 1.5 inch mount, 80 mm (3.1 inch) offset	**A5E50507514**
Bracket, 316L Stainless steel, 1.5 inch mount, 200 mm (7.9 inch) offset	**A5E50507516**
SITRANS LR150 HMI with connection cable	**A5E50812988**
SITRANS LR140/LR150 Blind lid with o-ring	**A5E50822955**
SITRANS LR150 clear lid with o-ring	**A5E50822960**
Flat gasket, FKM, for G1.5 inch sensor	**A5E50822967**
1-½ BSP locknut, plastic	**7ML1830-1DP**
Polypropylene adapter flange, 2"/DN50, universal, 1.5" NPT	**A5E50868980**

Accessories	Article No.
Polypropylene adapter flange, 2"/DN50, universal, 1,5" BSPT	**A5E50868982**
Polypropylene adapter flange, 3"/DN80, universal, 1.5" NPT	**A5E50868988**
Polypropylene adapter flange, 3"/DN80, universal, 1,5" BSPT	**A5E50868998**
Polypropylene adapter flange, 4"/DN100, universal, 1.5" NPT	**A5E50869003**
Polypropylene adapter flange, 4"/DN100, universal, 1.5" BSPT	**A5E50869005**
Note: other polypropylene adapter flange sizes available via PVR request.	
SIMATIC RTU3030C compact, remote data manager with alarming	**6NH3112-3BA00-0-XX0**
HART modem with USB interface	**7MF4997-1DC**
Intrinsically Safe barrier	**7NG4124-1AA00**
SITRANS RD100, loop powered display - see Chapter 7	**7ML5741-.....-.**
SITRANS RD150, remote digital display for 4 to 20 mA and HART devices - see Chapter 7	**7ML5742-.....-....**
SITRANS RD200, universal input display with Modbus conversion - see Chapter 7	**7ML5740-.....-..**
SITRANS RD300, dual line display with totalizer and linearization curve and Modbus conversion- see Chapter 7	**7ML5744-.....-..**
For applicable back up point level switch -see point level measurement section	

1) Must be ordered in combination with order code E24, E25, E27, E49. or E29.
2) Not available with order code E24, E25, E27, E49. or E29.

© Siemens AG 2025

Technical specifications

SITRANS LR150	
Mode of operation	
Measuring principle	W band FMCW radar
Measuring range	0 ... 15 m (0 ... 49.2 ft)
Frequency	80 GHz nominal
Beam angle	8°
Power Supply	
HART	
• Voltage	12 ... 35 V DC
• Current	4 ... 20 mA
Communications	
4 ... 20 mA	HART 7.0
Accuracy	± 2 mm
Rated operating conditions	
Vessel pressure	-1 ... +3 bar (14.50 ... 43.51 psi g)
Ambient temperature	-40 ... +70 °C (-40 ... +158 °F)
Process temperature	-40 ... +80 °C (-40 ... +176 °F)
Storage temperature	-40 ... +80 °C (-40 ... +176 °F)
Minimum dielectric of the medium	1.6
Design	
Weight	0.5 kg (1.1 lb)
Material (sensor)	PVDF
Material (enclosure)	PBT
Process connection	1-½" NPT, 1-½" BSPT or 1-½" BSPP
Degree of protection	Type 4X, IP66/67
Cable inlet	M20 or ½" NPT
Certificates and approvals	
	CE, ATEX, IECEx, $_{c}$FM$_{US}$, $_{c}$CSA$_{US}$, EAC, NEPSI, FDA, Reg. (EC) No. 1935/2004
Radio	CE, FCC, IC, Anatel, ICASA, NCC, KC, CITC, RCM, WPC, Telec, NBTC, MCMC
Water monitoring, flow	MCERTS Class 1
Canadian Registration Number (CRN)	
British Columbia	0F22218.51
Alberta	0F20596.2
Saskatchewan	0F2002.3
Manitoba	0F7032.4
Ontario	0F22218.5
New Brunswick	0F05183.6
Nova Scotia	0F1490.07
Prince Edward Island	0F1490.08
Newfoundland and Labrador	0F1490.09
Yukon	0F1490.0
Northwest Territories	0F1490.0Y
Nunavut	0F1490.0T
Programming	
SITRANS mobile IQ App	SITRANS mobile IQ is a Bluetooth app that provides an intuitive interface to quickly configure, set up and monitor SITRANS LR100 series (available for Android, Apple and Windows devices). For more information: http://www.siemens.com/mobileIQ
Optional HMI	4 button with display of variables and diagnostic data
SIMATIC PDM	SIMATIC PDM allows for remote PC configuration and diagnostics (for installation on a network).
SITRANS DTM	

© Siemens AG 2025

Options

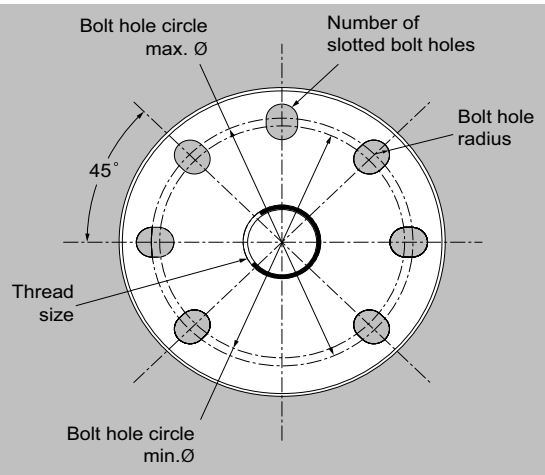

Part number	Adapter flange size	OD ± 1	B.C.D. max. for slotted holes (bmax.) ± 0.75	B.C.D. min. for slotted holes (bmin.) ± 0.75	Bolt hole radius ± 0.25	Number of slotted holes	Thread size
A5E50868980 A5E50868982 A5E50868983	2"/DN50	200	160	150	R 9.5	8	1.5" NPT, PP 1.5" BSPT, PP 1.5" BSPP, PP
A5E50868988 A5E50868998 A5E50869002	3"/DN80	200	160	150	R 9.5	8	1.5" NPT, PP 1.5" BSPT, PP 1.5" BSPP, PP
A5E50868953 A5E50868975 A5E50869003 A5E50869005 A5E50869010	4"/DN100	229	191	175	R 9.5	8	1" NPT, PP 1" BSPT, PP 1.5" NPT, PP 1.5" BSPT, PP 1.5" BSPP, PP
A5E50868976 A5E50868977 A5E50869012 A5E50869014 A5E50869015	6"/DN150	285	242	240	R 11.5	8	1" NPT, PP 1" BSPT, PP 1.5" NPT, PP 1.5" BSPT, PP 1.5" BSPP, PP

SITRANS LR150, Polypropylene adapter flange

© Siemens AG 2025

Dimensional drawings

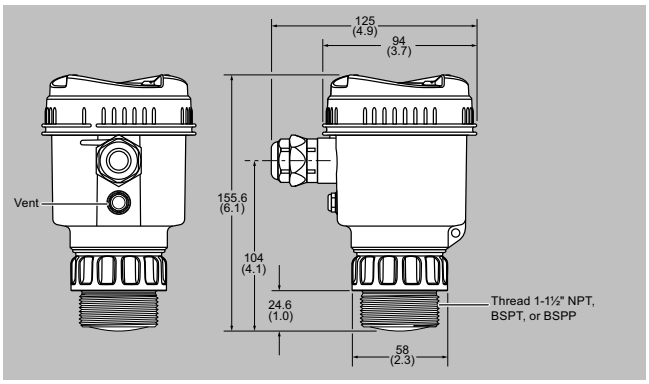

SITRANS LR150, dimensions in mm (inch)

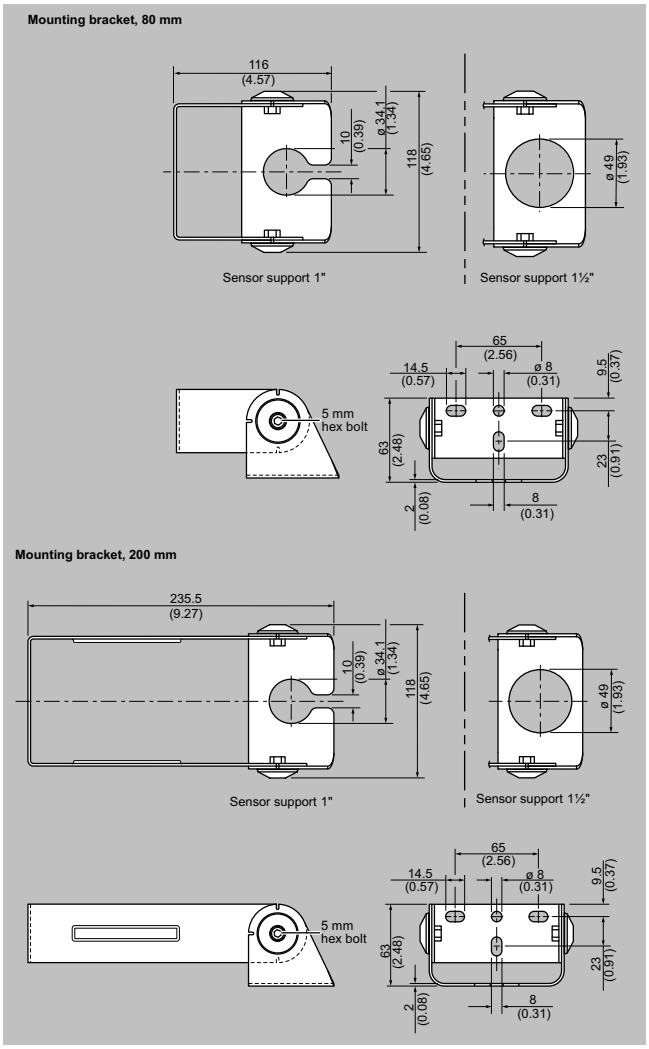

SITRANS LR150 mounting brackets, dimensions in mm (inch)

Circuit diagrams

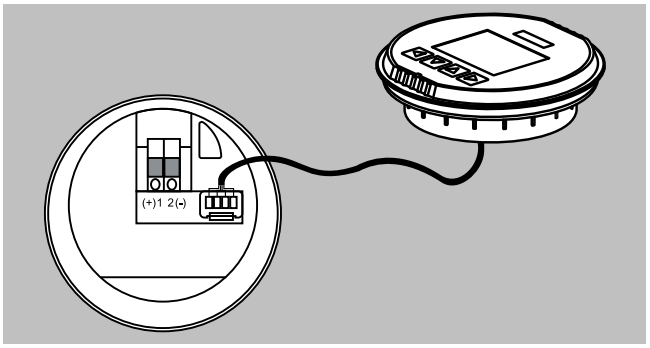

SITRANS LR150 connections