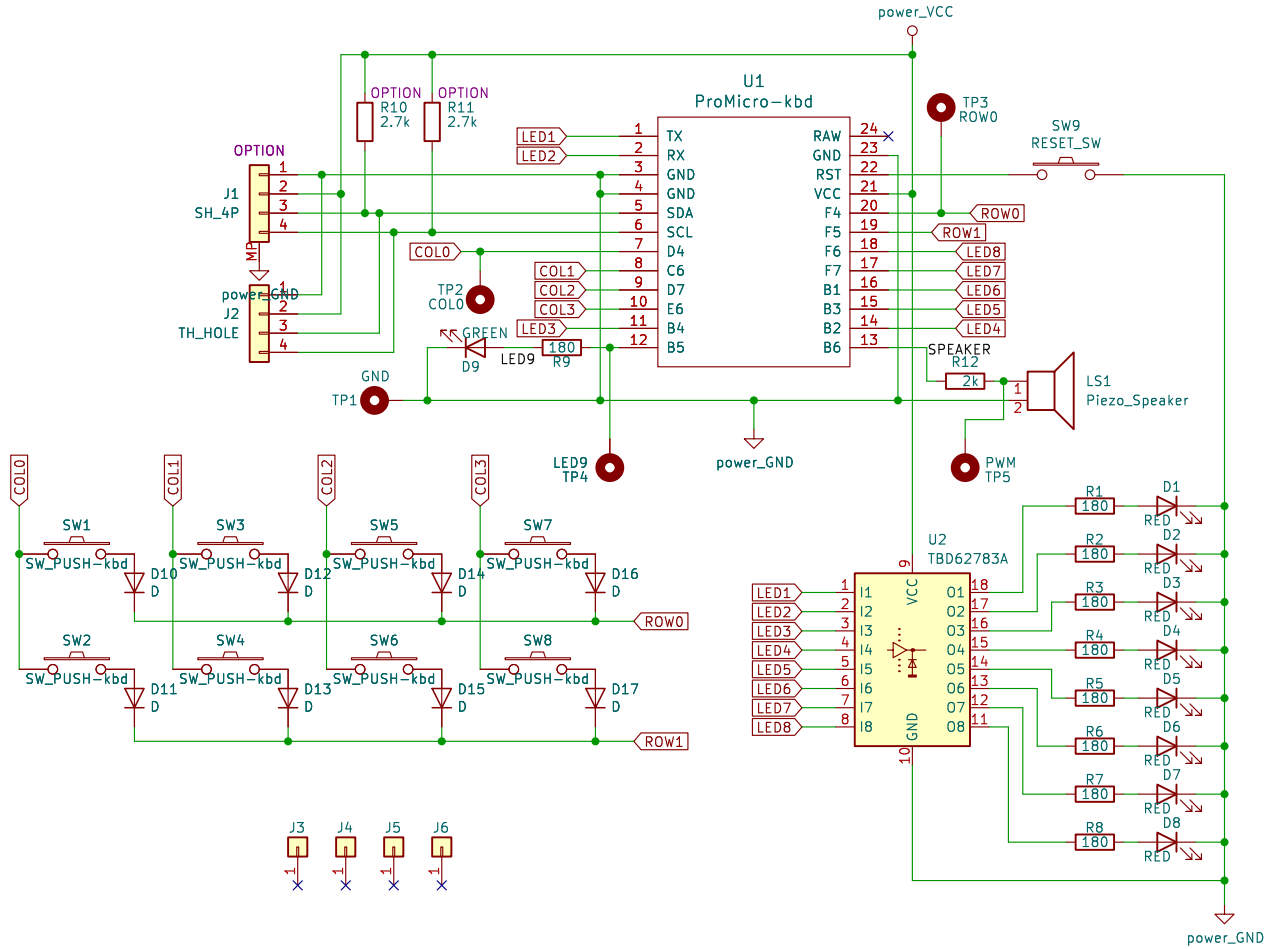


Sheet: /
File: keybit8.kicad_sch

**Title:**

| Size: A4 | Date: | Rev: |
|---|---|---|
| KiCad E.D.A. kicad 7.0.5 | | Id: 1/1 |