Embedded System

- ✓ An embedded system is a special-purpose computer system, part of a larger system which it controls, it designed to perform a dedicated function
- ✓ Invisible computers, inside most of the devices we use, from a music player, a mobile phone, to cars, trains, medical equipment, and so on.
- ✓ The majority of the embedded product uses a microcontroller to do one task only.
- ✓ In an embedded system, there is only one application software that is typically burned into ROM
- ✓ More than humans on the planet, already >60 billion total, including ~20 billion connected IoT devices (2025)"
- ✓ 99% of processors used in embedded systems
- ✓ Market size is about 100 times the desktop market
- ✓ The majority of microcontrollers in use today are embedded in Varity of machinery, such as: Consumer Electronic, Medical Monitoring, Security System, Closed Loop Process, Personal Computing, Automotive, Communications , etc.

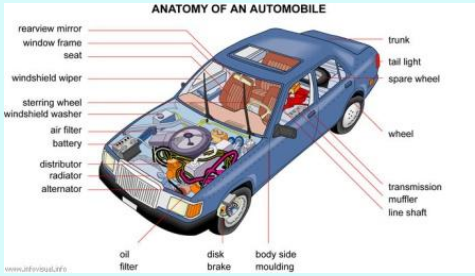

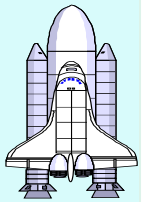

Automotive Electronics

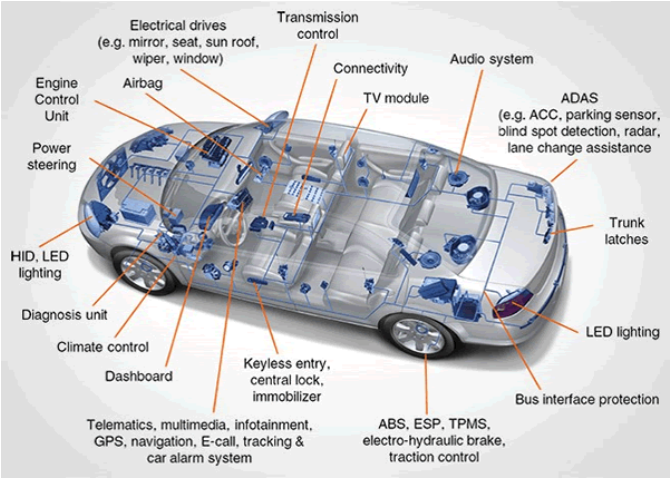

Level of dependency

1970

Electronic Injections
Check Control
Speed Control
Central Locking
...

1980

Electronic Gear Control
Electronic Air Condition
ASC Anti Slip Control
ABS
Telephone
Seat Heating Control
Autom. Mirror Dimming
...

1990

Navigation System
CD-Changer
ACC Adaptive Cruise Control
Airbags
DSC Dynamic Stability Control
Adaptive Gear Control
Xenon Light
BMW Assist
RDS/TMC
Speech Recognition
Emergency Call...

2000

ACC Stop&Go
BFD
ALC
KSG
42 voltage
Internet Portal
GPRS, UMTS
Telematics
Online Services
BlueTooth
Car Office
Local Hazard Warning
Integrated Safety System
Steer/Brake-By-Wire
I-Drive
Lane Keeping Assist.
Personalization
Software Update
Force Feedback Pedal...

source: BMW

Embedded Systems Market Size

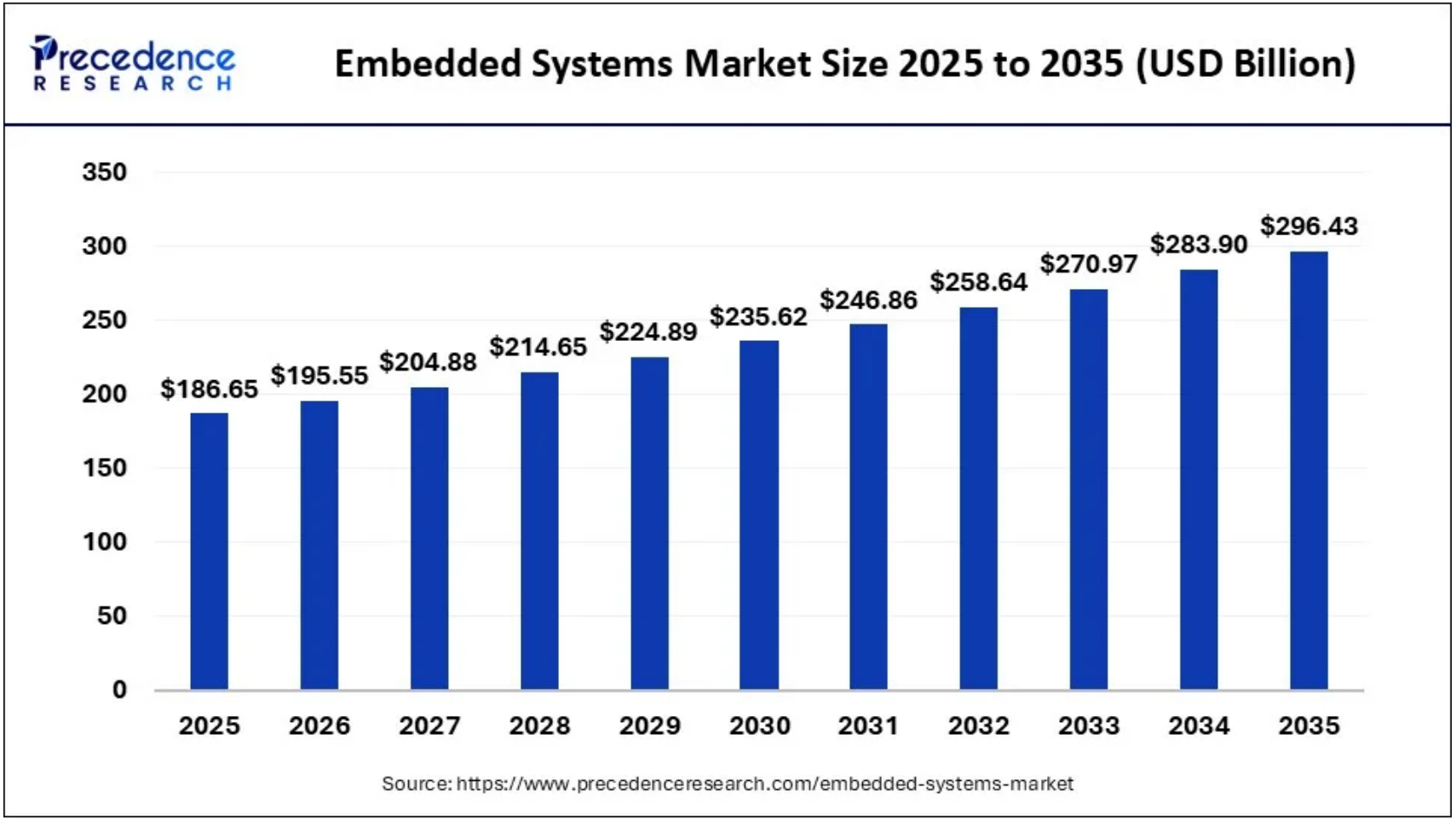

Characteristics of embedded systems

- Single-functioned
  - Dedicated to perform a single function
- Complex functionality
  - Often have to run sophisticated algorithms or multiple algorithms.
    - Cell phone, laser printer.
- Tightly-constrained
  - Low cost, low power, small, fast, etc.
- Reactive and real-time
  - Continually reacts to changes in the system's environment
  - Must compute certain results in real-time without delay
- Safety-critical
  - Must not endanger human life and the environment
- They often interact with the physical world, using sensors and actuators.

Embedded System Design Challenges

- ✓ Low cost
- ✓ Light weight
- ✓ Reliability
- ✓ Low power
- ✓ Portable
- ✓ Complexity
- ✓ Ease of use
- ✓ Mixed digital/analog requirements
- ✓ Shrinking time-to-market
- ✓ Real-time processing
- ✓ Secure

What is a Microcontroller?

- A **microcontroller** (sometimes abbreviated **µC**, **uC** or **MCU**) is an entire computer manufactured on a single chip. A microcontroller is often described as a '**computer-on-a-chip**

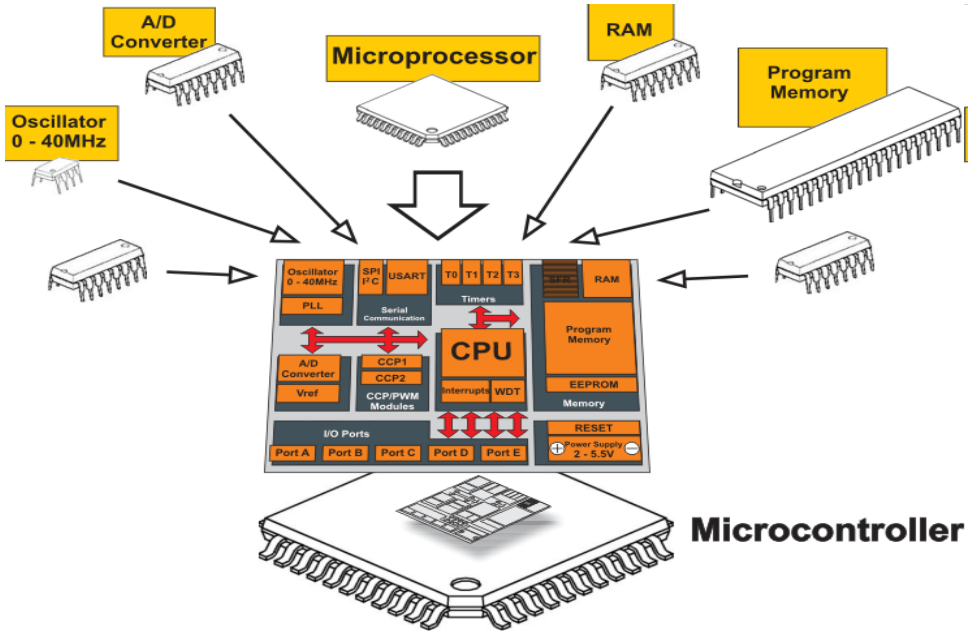

- µC containing a processor core (CPU), RAM, ROM serial ports, parallel input/output ports, timers, counters, interrupt control, analog-to-digital converters, random access memory, read only memory, etc..
- It can only perform simple task.

Microcontroller vs. Microprocessor

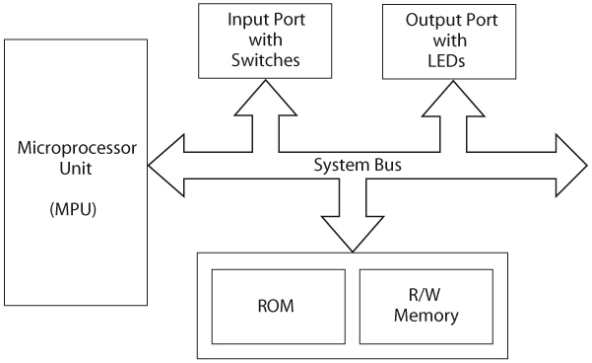

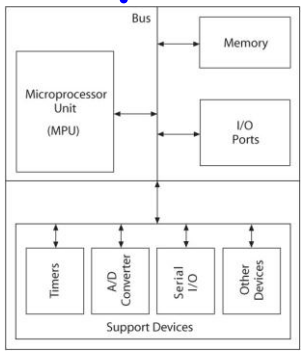

Microprocessor

- General-purpose
- Many instruction types and modes
- Mainly for processing
- Hardware includes CPU only
- CPU is stand-alone, RAM, ROM, I/O, timer are separate
- Designer can decide on the amount of ROM, RAM and I/O ports.

Microcontroller

- Single-purpose
- Less instruction types and modes
- Mainly for control
- Hardware includes CPU and peripherals
- CPU, RAM, ROM, I/O and timer are all on a single chip
- Fixed amount of on-chip ROM, RAM, I/O ports
- No operating systems
- Execute a single program

Design Examples …..

Microcontrollers vs. Microprocessors

MPU-Based Time and Temperature System

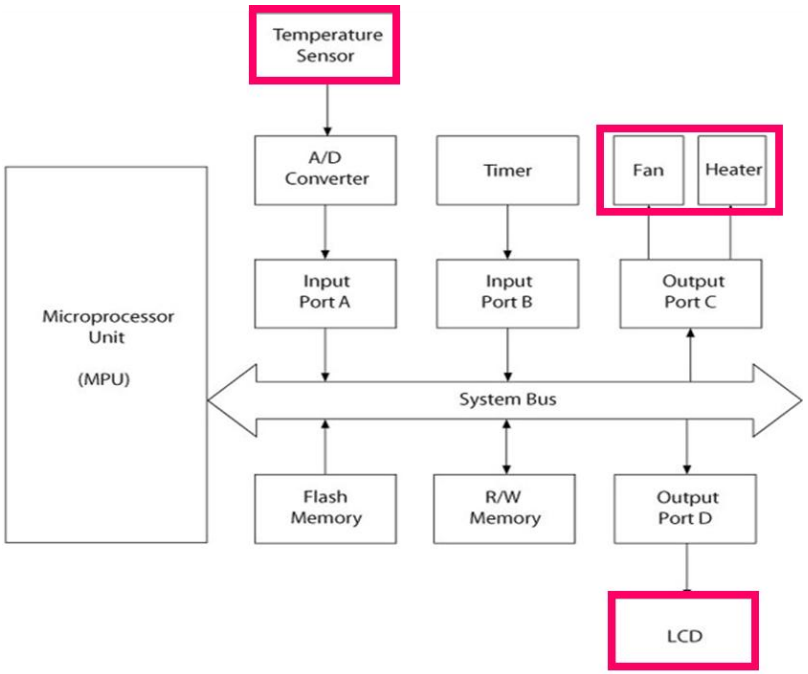

MCU-Based Time and Temperature System

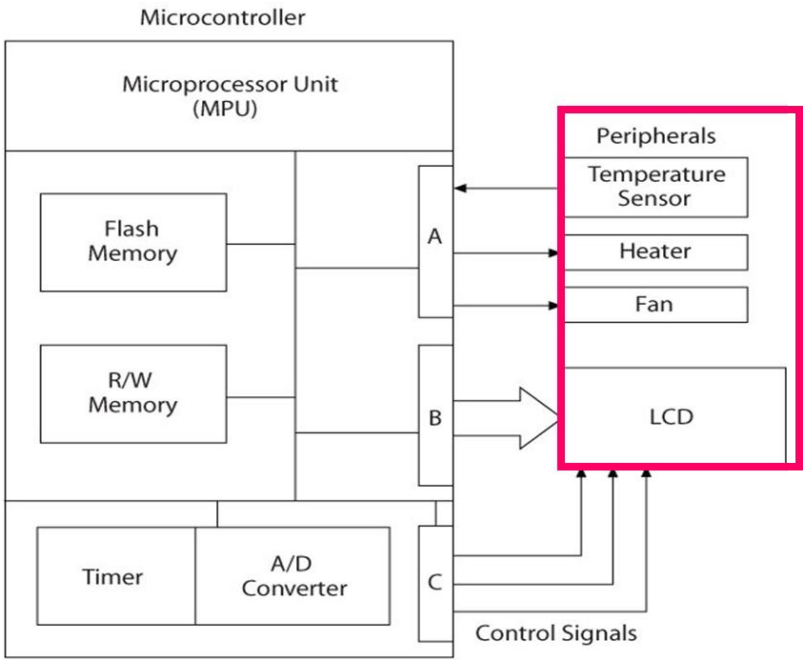

Variety of microcontrollers

- Over 40 microcontroller manufacturers

Microchip, Texas Instruments, Motorola, Freescale, Atmel, Parallax, National, Intel, Zilog, Hitachi/Mitsubishi/Renesas, Cypress, Holtek, Rabbit, Toshiba, NEC, Philips, Sanyo, Matsushita, Sony, LG Semicon, Samsung, Siemens, Toshiba, Fujitsu, Semtech, …

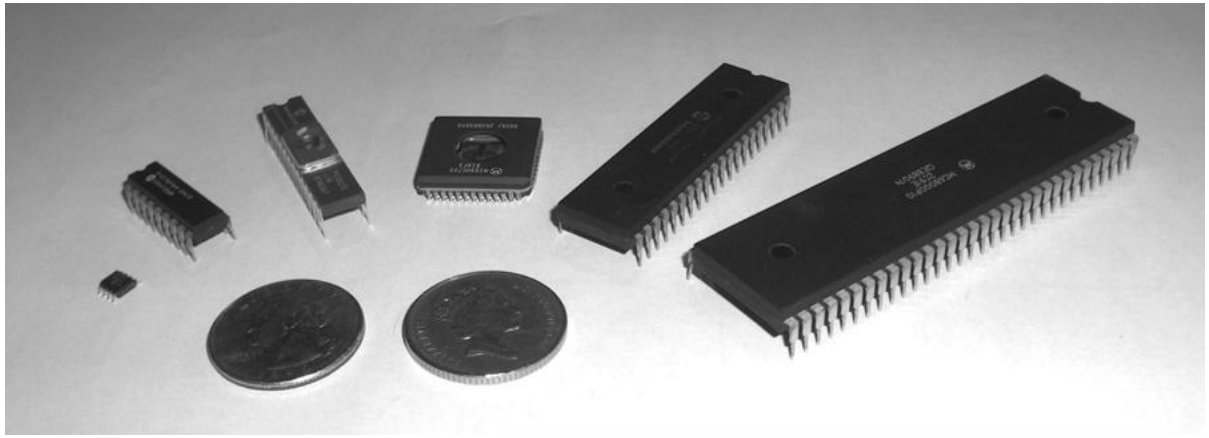

From left to right: PIC 12F508, PIC 16F84A, PIC 16C72, Motorola 68HC05B16, PIC 16F877, Motorola 68000

Von Neuman and Harvard Architecture

Von Neuman Architecture

- Program instructions and data are stored in a common main memory.
- Microcontrollers based on the Von-Neuman architecture have a single bus that is used to fetch both instructions and data.

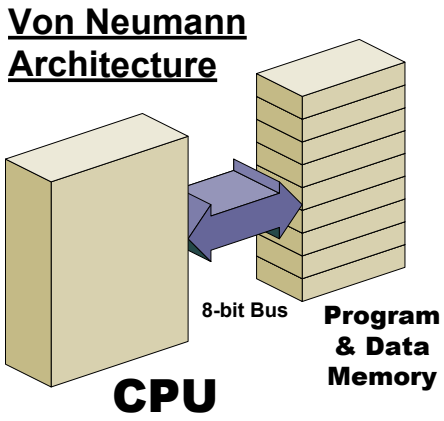

Harvard Architecture

- Microcontrollers based on the Harvard Architecture have separate data and instruction memories.

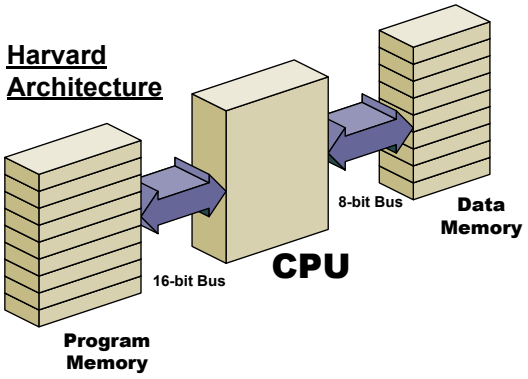

CISC vs. RISC

RISC (Reduced Instruction Set Computer)

- The benefits of RISC design simplicity are a smaller chip, smaller pin count, and very low power consumption.

CISC (Complex Instruction Set Computer)

- Many modern microcontrollers are based on the CISC concept.
- The typical CISC microcontroller has well over 80 instructions, many very powerful and specialised.
- It is quite common for the instructions to all behave quite differently.
- The advantages of the CISC architecture is that many of the instructions are 'macro-like', allowing the programmer to use one instruction in place of many.

Criteria in Choosing a Microcontroller

1. Meeting the computing needs of the task efficiently
2. Speed
3. Amount of ROM and RAM
4. Number of I/O ports
5. Size
6. Packaging
7. Power consumption
8. Easy to upgrade
9. Cost per unit
10. Availability of software development tools:
    - ✓ assemblers, debuggers, C compilers, emulator, simulator, technical support
11. Wide availability and reliable sources of the microcontrollers.

Microchip PIC

- PIC is a family of Harvard architecture microcontroller made by Microchip Technology. The name PIC initially referred to "Peripheral Interface Controller" . PIC microcontrollers were the first RISC microcontroller.

PIC Microcontroller product family

- 8-bit microcontrollers
  - ✓ PIC10
  - ✓ PIC12
  - ✓ PIC14
  - ✓ PIC16
  - ✓ PIC17
  - ✓ PIC18
- 16-bit microcontrollers
  - ✓ PIC24F
  - ✓ PIC24H
- 32-bit microcontrollers
  - ✓ PIC32
- 16-bit digital signal controllers
  - ✓ dsPIC30
  - ✓ dsPIC33F

All PIC microcontrollers use Harvard architecture,

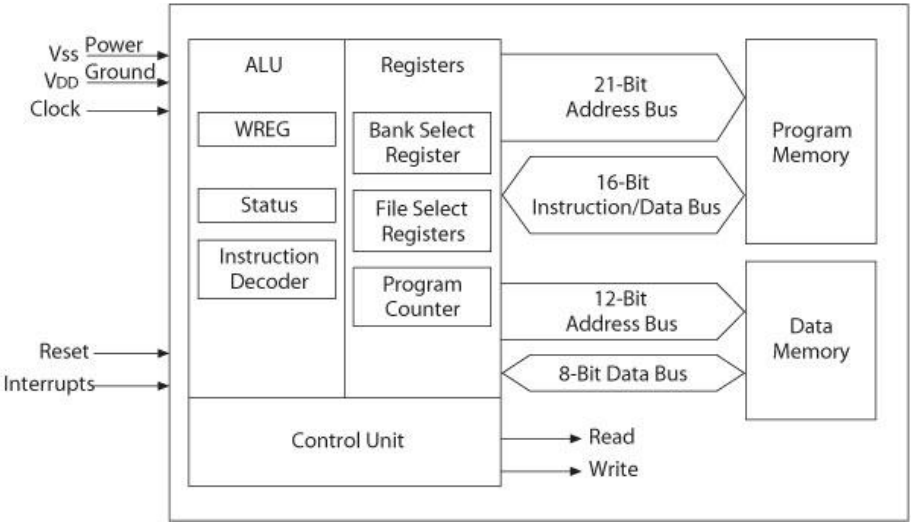

PIC18F – MPU and Memory

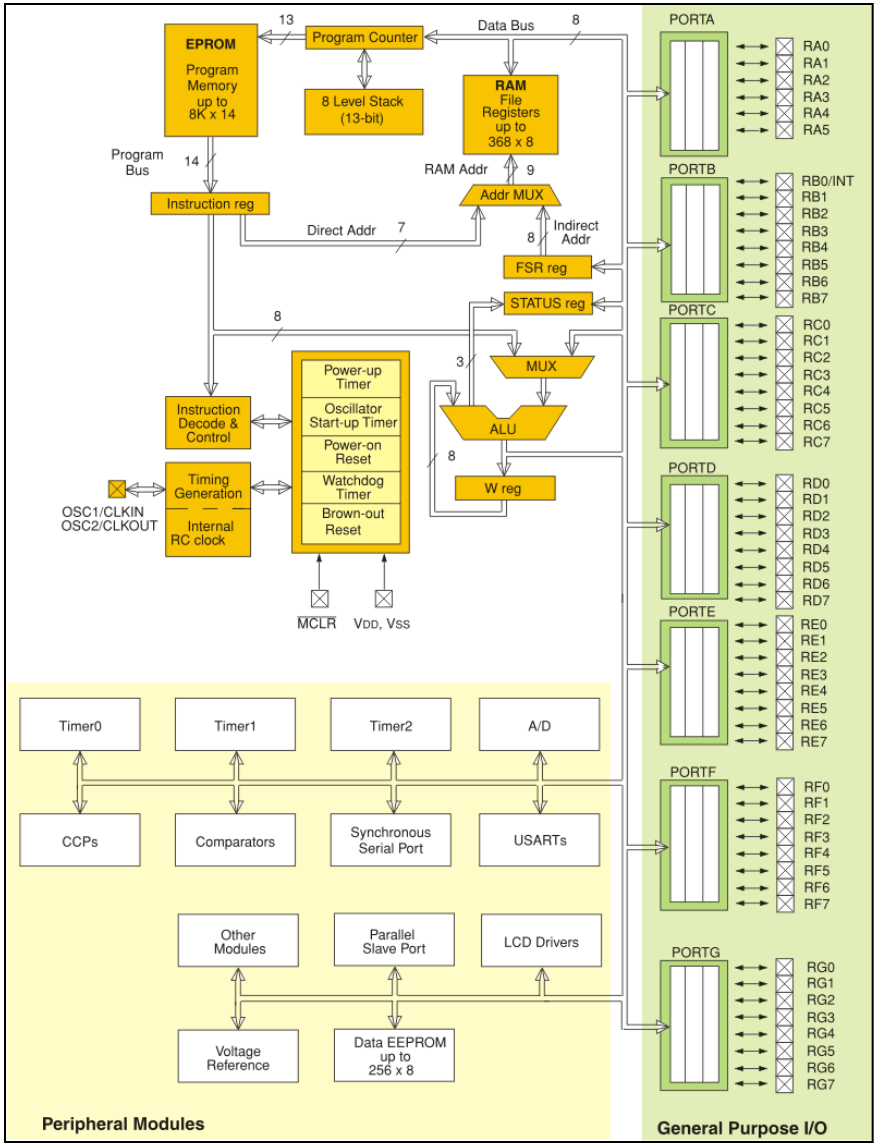

PIC microcontrollers use Harvard architecture,

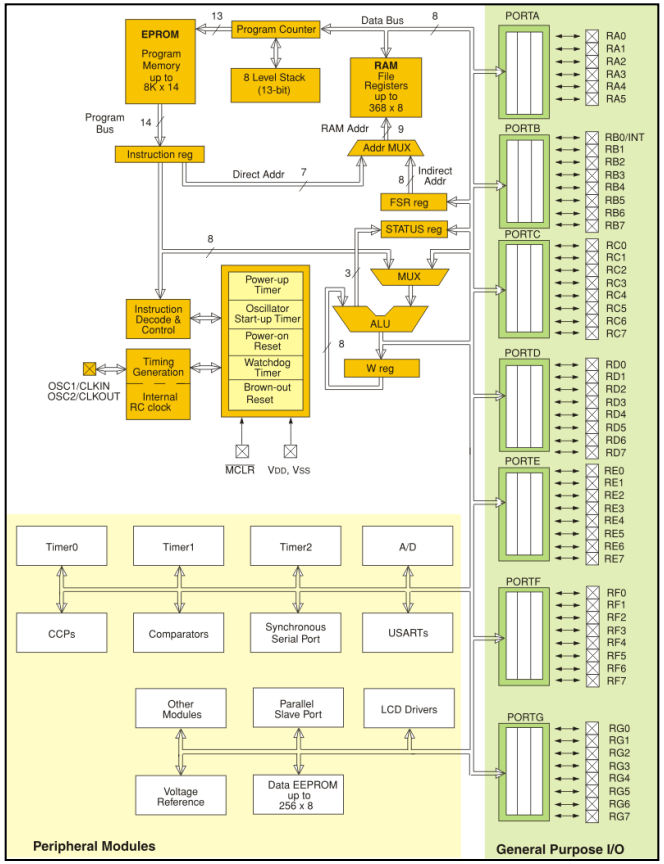

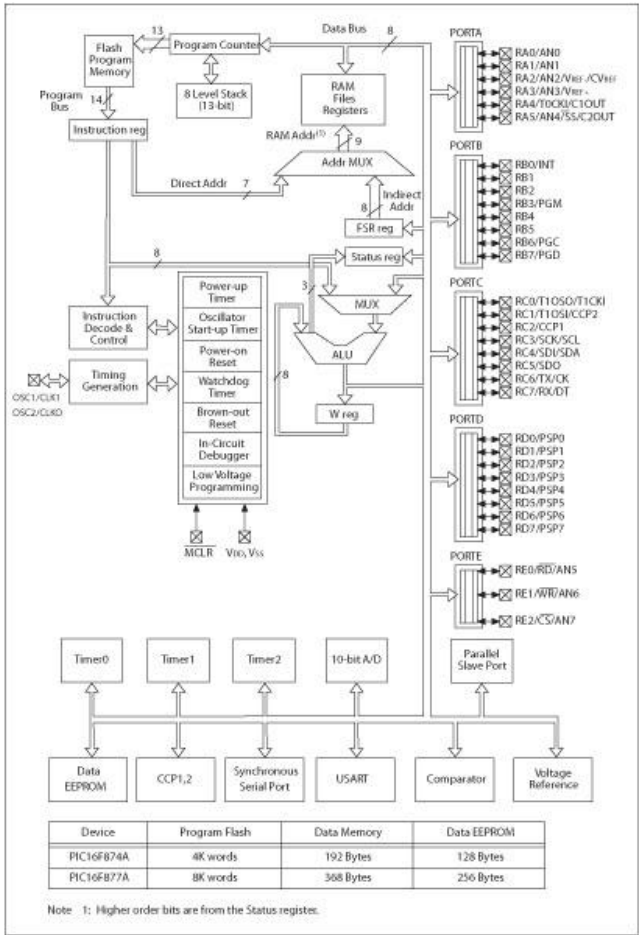

Device	Program Flash	Data Memory	Data EEPROM
PIC16F874A	4K words	192 Bytes	128 Bytes
PIC16F877A	8K words	368 Bytes	256 Bytes

PIC18F: 77 instructions

PIC16F87: 35 instructions

Why PIC microcontrollers?

- ✓ PICs are popular with both industrial developers and hobbyists alike due to their:
  - Low cost,
  - Wide availability,
  - Large user base,
  - Extensive collection of application notes,
  - Availability of low cost or free development tools, and
  - Serial programming (and re-programming with flash memory) capability.

PIC18 Microcontroller Family

Product	Program Memory Type	Program Memory Bytes	Data Memory RAM Bytes	Data Memory EEPROM Bytes	I/O Ports	ADC 10-bit	MSSP	USART	Other	CCP/ PWM	Timers 8/16-bit	Packages	Pins
PIC18F1220	FLASH	4K	256	256	16	7	—	1	6x PMM	1	1/3	DIP, SOIC, SSOP, QFN	18
PIC18F1320	FLASH	8K	256	256	16	7	—	1	6x PMM	1	1/3	DIP, SOIC, SSOP, QFN	18
PIC18F2220	FLASH	4K	512	256	23	10	I²C/SPI	1	6x PMM	2	1/3	DIP, SOIC	28
PIC18F2320	FLASH	8K	512	256	23	10	I²C/SPI	1	6x PMM	2	1/3	DIP, SOIC	28
PIC18C242	OTP	16K	512	—	23	5	I²C/SPI	1	—	2	1/3	DIP, SOIC	28
PIC18C252	OTP	32K	1536	—	23	5	I²C/SPI	1	—	2	1/3	DIP, SOIC	28
PIC18F242	FLASH	16K	512	256	23	5	I²C/SPI	1	—	2	1/3	DIP, SOIC, SSOP	28
PIC18F252	FLASH	32K	1536	256	23	5	I²C/SPI	1	—	2	1/3	DIP, SOIC, SSOP	28
PIC18F258	FLASH	32K	1536	256	22	5	I²C/SPI	1	CAN 2.0B	1	1/3	DIP, SOIC	28
PIC18F4220	FLASH	4K	512	256	34	13	I²C/SPI	1	6x PMM	2	1/3	DIP, TQFP, QFN	40/44
PIC18F4320	FLASH	8K	512	256	34	13	I²C/SPI	1	6x PMM	2	1/3	DIP, TQFP, QFN	40/44
PIC18C442	OTP	16K	512	—	34	8	I²C/SPI	1	—	2	1/3	DIP, PLCC, TQFP	40/44
PIC18C452	OTP	32K	1536	—	34	8	I²C/SPI	1	—	2	1/3	DIP, PLCC, TQFP	40/44
PIC18F442	FLASH	16K	512	256	34	8	I²C/SPI	1	—	2	1/3	DIP, PLCC, TQFP	40/44
PIC18F452	FLASH	32K	1536	256	34	8	I²C/SPI	1	—	2	1/3	DIP, PLCC, TQFP	40/44
PIC18F458	FLASH	32K	1536	256	33	5	I²C/SPI	1	CAN 2.0B	1	1/3	DIP, PLCC, TQFP	40/44
PIC18C601	—	ROMless	1536	—	31	8	I²C/SPI	1	—	2	1/3	PLCC, TQFP	64/68
PIC18C658	OTP	32K	1536	—	52	12	I²C/SPI	1	CAN 2.0B	2	1/3	PLCC, TQFP	64/68
PIC18F6520	FLASH	32K	2048	1024	52	12	I²C/SPI	2	—	5	2/3	TQFP	64
PIC18F6620	FLASH	64K	3840	1024	52	12	I²C/SPI	2	—	5	2/3	TQFP	64
PIC18F6720	FLASH	128K	3840	1024	52	12	I²C/SPI	2	—	5	2/3	TQFP	64
PIC18C801	—	ROMless	1536	—	42	12	I²C/SPI	1	—	2	1/3	PLCC, TQFP	80/84
PIC18C858	OTP	32K	1536	—	68	16	I²C/SPI	1	CAN 2.0B	2	1/3	PLCC, TQFP	80/84
PIC18F8520	FLASH	32K	2048	1024	68	16	I²C/SPI	2	EMA	5	2/3	TQFP	80
PIC18F8620	FLASH	64K	3840	1024	68	16	I²C/SPI	2	EMA	5	2/3	TQFP	80
PIC18F8720	FLASH	128K	3840	1024	68	16	I²C/SPI	2	EMA	5	2/3	TQFP	80

Abbreviation: ADC = Analog-to-Digital Converter; CCP = Capture/Compare/PWM; I²C = Inter-Integrated Circuit Bus; PMM = Power Managed Mode; PWM = Pulse Width Modulation; SPI = Serial Peripheral Interface; USART = Universal Synchronous/Asynchronous Receiver/Transmitter
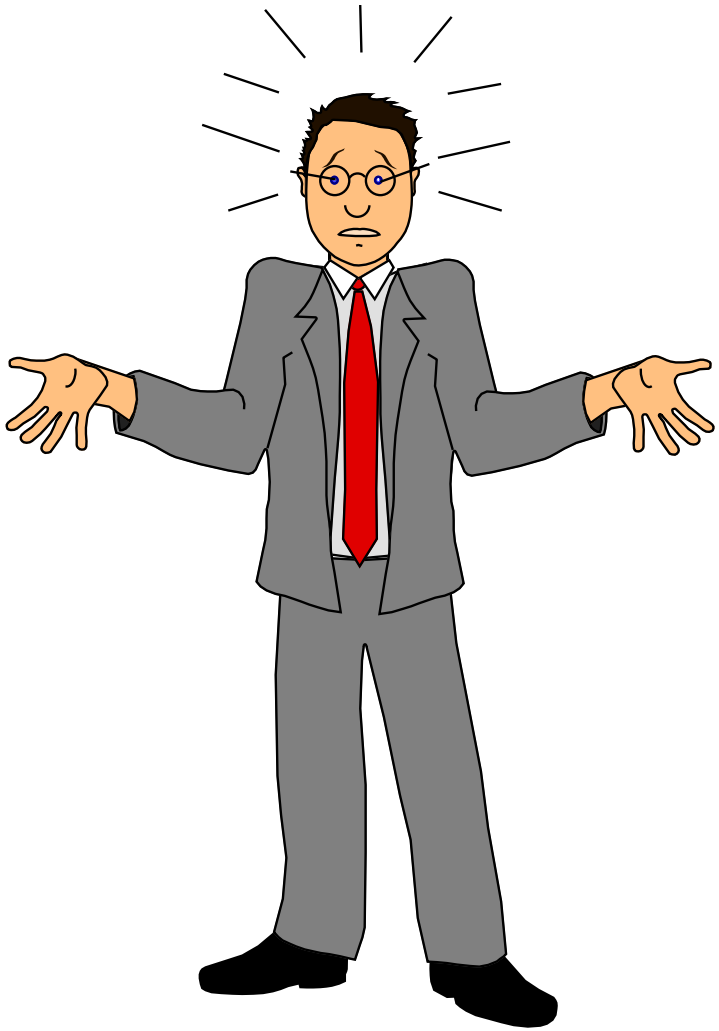
Questions