Microchip PIC

"Peripheral Interface Controller"

- PIC microcontrollers were the first RISC microcontroller.
- Made by Microchip Technology.
- The name PIC initially referred to "Peripheral Interface Controller".
- **PIC** is a family of Harvard architecture microcontroller.

Why PIC microcontrollers?

- PICs are popular due to:
  - ✓ Low cost.
  - ✓ Wide availability.
  - ✓ Easy to program
  - ✓ Better online documentation.
  - ✓ Extensive collection of application notes.
  - ✓ free development tools.
  - ✓ This IC can be reprogrammed and erased up to 10,000 times. Therefore it is very good for new product development phase.

PIC Microcontroller product family

Depending on the bus width, there are 8-, 16- and 32-bit microcontrollers.

- 8-bit microcontrollers
  - ✓ PIC10
  - ✓ PIC12
  - ✓ PIC14
  - ✓ PIC16
  - ✓ PIC17
  - ✓ PIC18
- 16-bit microcontrollers
  - ✓ PIC24F
  - ✓ PIC24H
- 32-bit microcontrollers
  - ✓ PIC32
- 16-bit digital signal controllers
  - ✓ DSPIC30
  - ✓ DSPIC33F

PIC Microcontroller product family

The table shows the main features of three categories of PIC microcontrollers

Family	ROM [Kbytes]	RAM [bytes]	Pins	Clock Freq. [MHz]	A/D Inputs	Resolution of A/D Converter	Compar-ators	8/16 – bit Timers	Serial Comm.	PWM Outputs	Others
Base-Line 8 - bit architecture, 12-bit Instruction Word Length											
PIC10FXXX	0.375 - 0.75	16 - 24	6 - 8	4 - 8	0 - 2	8	0 - 1	1 x 8	-	-	-
PIC12FXXX	0.75 - 1.5	25 - 38	8	4 - 8	0 - 3	8	0 - 1	1 x 8	-	-	EEPROM
PIC16FXXX	0.75 - 3	25 - 134	14 - 44	20	0 - 3	8	0 - 2	1 x 8	-	-	EEPROM
PIC16HVXXX	1.5	25	18 - 20	20	-	-	-	1 x 8	-	-	Vdd = 15V
Mid-Range 8 - bit architecture, 14-bit Instruction World Length											
PIC12FXXX	1.75 - 3.5	64 - 128	8	20	0 - 4	10	1	1 - 2 x 8 1 x 16	-	0 - 1	EEPROM
PIC12HVXXX	1.75	64	8	20	0 - 4	10	1	1 - 2 x 8 1 x 16	-	0 - 1	-
PIC16FXXX	1.75 - 14	64 - 368	14 - 64	20	0 - 13	8 or 10	0 - 2	1 - 2 x 8 1 x 16	USART I2C SPI	0 - 3	-
PIC16HVXXX	1.75 - 3.5	64 - 128	14 - 20	20	0 - 12	10	2	2 x 8 1 x 16	USART I2C SPI	-	-
High-End 8 - bit architecture, 16-bit Instruction Word Length											
PIC18FXXX	4 - 128	256 - 3936	18 - 80	32 - 48	4 - 16	10 or 12	0 - 3	0 - 2 x 8 2 - 3 x 16	USB2.0 CAN2.0 USART I2C SPI	0 - 5	-
PIC18FXXJXX	8 – 128	1024 - 3936	28 - 100	40 - 48	10 - 16	10	2	0 - 2 x 8 2 - 3 x 16	USB2.0 USART Ethernet I2C SPI	2 - 5	-
PIC18FXXKXX	8 – 64	768 - 3936	28 - 44	64	10 - 13	10	2	1 x 8 3 x 16	USART I2C SPI	2	-

All PIC microcontrollers use Harvard architecture,

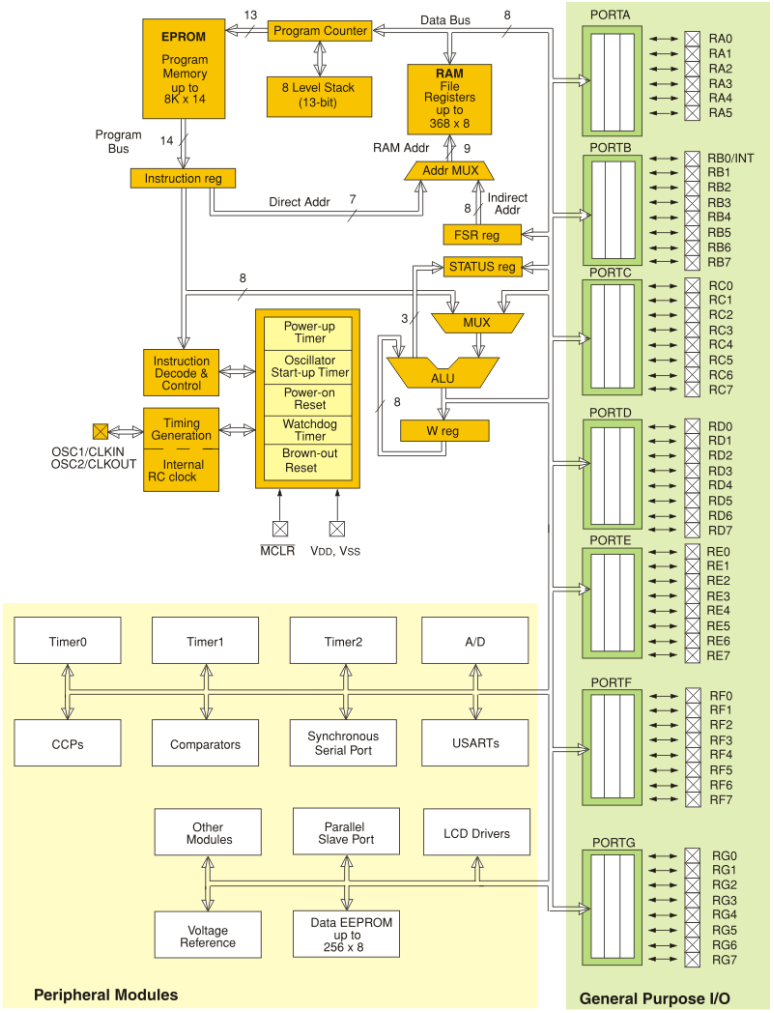

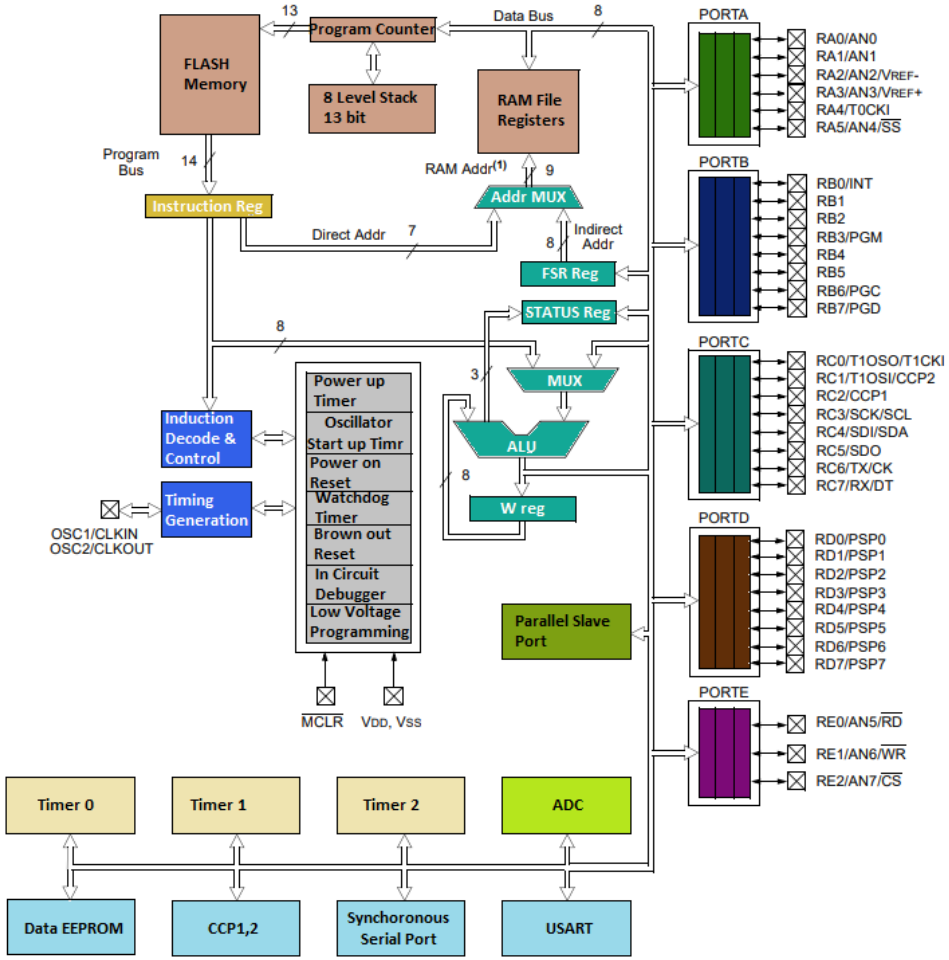

PIC18F – 77 instructions

PIC16F – 35 instructions

NSTRUCTION SET:

- ✓ The instruction set for the 16F8XX includes 35 instructions in total.
- ✓ The instruction set for the PIC18F has 77 instructions .
- ✓ if you use assembly language for programming you expected to cope with these number of instructions.
- ✓ If you program in a high-level programming language such C, which means that most work has been already done by somebody else. You just have to use relatively simple instructions.

NSTRUCTION SET

Instruction	Description	Operation	Flag	CLK	*
Data Transfer Instructions					
MOVLW k	Move constant to W	k -> w		1	
MOVWF f	Move W to f	W -> f		1	
MOVF f,d	Move f to d	f -> d	Z	1	1, 2
CLRW	Clear W	0 -> W	Z	1	
CLRF f	Clear f	0 -> f	Z	1	2
SWAPF f,d	Swap nibbles in f	f(7:4),(3:0) -> f(3:0),(7:4)		1	1, 2
Arithmetic-logic Instructions					
ADDLW k	Add W and constant	W+k -> W	C, DC, Z	1	
ADDWF f,d	Add W and f	W+f -> d	C, DC ,Z	1	1, 2
SUBLW k	Subtract W from constant	k-W -> W	C, DC, Z	1	
SUBWF f,d	Subtract W from f	f-W -> d	C, DC, Z	1	1, 2
ANDLW k	Logical AND with W with constant	W AND k -> W	Z	1	
ANDWF f,d	Logical AND with W with f	W AND f -> d	Z	1	1, 2
IORLW k	Logical OR with W with constant	W OR k -> W	Z	1	
IORWF f,d	Logical OR with W with f	W OR f -> d	Z	1	1, 2
XORWF f,d	Logical exclusive OR with W with constant	W XOR k -> W	Z	1	1, 2
XORLW k	Logical exclusive OR with W with f	W XOR f -> d	Z	1	
INCF f,d	Increment f by 1	f+1 -> f	Z	1	1, 2
DECF f,d	Decrement f by 1	f-1 -> f	Z	1	1, 2
RLF f,d	Rotate left f through CARRY bit		C	1	1, 2
RRF f,d	Rotate right f through CARRY bit		C	1	1, 2
COMF f,d	Complement f	f -> d	Z	1	1, 2
Bit-oriented Instructions					
BCF f,b	Clear bit b in f	0 -> f(b)		1	1, 2
BSF f,b	Clear bit b in f	1 -> f(b)		1	1, 2
Program Control Instructions					
BTFSC f,b	Test bit b of f. Skip the following instruction if clear.	Skip if f(b) = 0		1 (2)	3
BTFSS f,b	Test bit b of f. Skip the following instruction if set.	Skip if f(b) = 1		1 (2)	3
DECFSZ f,d	Decrement f. Skip the following instruction if clear.	f-1 -> d skip if Z = 1		1 (2)	1, 2, 3
INCFSZ f,d	Increment f. Skip the following instruction if set.	f+1 -> d skip if Z = 0		1 (2)	1, 2, 3
GOTO k	Go to address	k -> PC		2	
CALL k	Call subroutine	PC -> TOS, k -> PC		2	
RETURN	Return from subroutine	TOS -> PC		2	
RETLW k	Return with constant in W	k -> W, TOS -> PC		2	
RETFIE	Return from interrupt	TOS -> PC, 1 -> GIE		2	
Other instructions					
NOP	No operation	TOS -> PC, 1 -> GIE		1	
CLRWDT	Clear watchdog timer	0 -> WDT, 1 -> TO, 1 -> PD	TO, PD	1	
SLEEP	Go into sleep mode	0 -> WDT, 1 -> TO, 0 -> PD	TO, PD	1	

Packaging

There are many types of IC packages, each having unique dimensions, mounting types and/or pin counts. Most common IC package types include DIP, surface-mount device (SMD), small-outline package (SOP), quad-flat package (QFP) and ball-grid array (BGA).

The PIC16F877 comes in three packages:

- Plastic Dual In-line Package (PDIP)
- Plastic Leaded Chip Carriers (PLCC): surface mount device package type
- Quad flat package (QFP): used for surface mount

The first one is mainly used for developing individual projects while other two are widely used in industrial applications.

https://www.ti.com/packaging/docs/searchtipackages.tsp?packageName=QFP

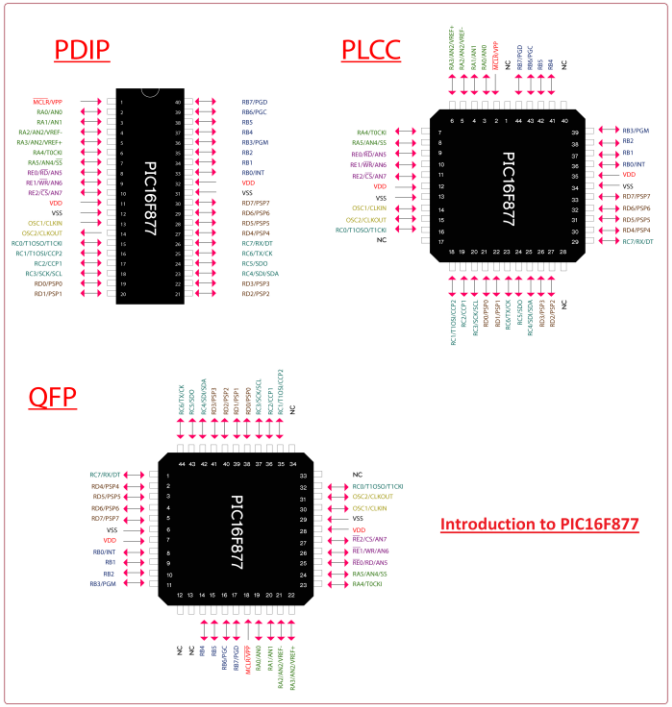

PIC16F887 Internal Block Diagram

- The basic architecture of PIC16F887 consists of Program memory, file registers and RAM and CPU registers.

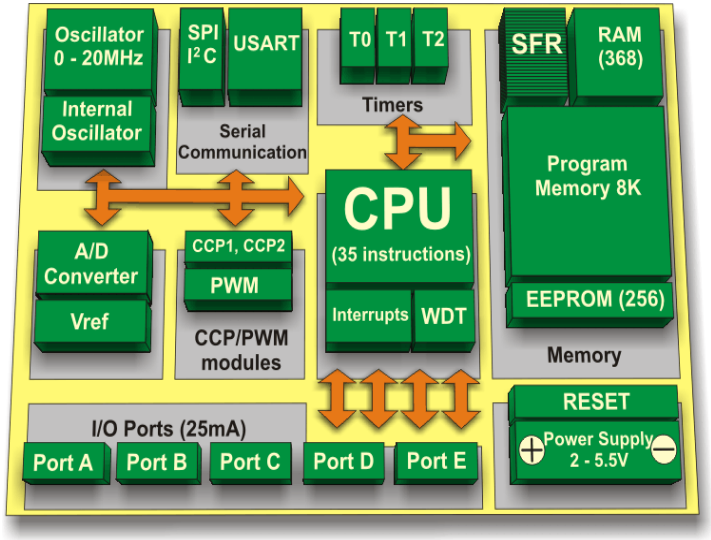

PIC16F887 Internal Block Diagram

RISC architecture

Only 35 instructions to learn

All single-cycle instructions except branches

Operating frequency 0-20 MHz

Precision internal oscillator

Factory calibrated

Software selectable frequency range of 8MHz to 31KHz

Power supply voltage 2.0-5.5V

Consumption: 220uA (2.0V, 4MHz), 11uA (2.0 V, 32 KHz) 50nA (stand-by mode)

Power-Saving Sleep Mode

35 input/output pins

High current source/sink for direct LED drive

software and individually programmable *pull-up* resistor

Interrupt-on-Change pin

PIC16F887 Internal Block Diagram

- The basic architecture of PIC16F887 consists of Program memory, file registers and RAM and CPU registers.C

- **8K ROM memory in FLASH technology**
- ✓ Chip can be reprogrammed up to 100.000 times
- ***In-Circuit Serial Programming* Option**
- ✓ Chip can be programmed even embedded in the target device
- **256 bytes EEPROM memory**
- ✓ Data can be written more than 1.000.000 times
- **368 bytes RAM memory**
- **A/D converter:**
- ✓ 14-channels
- ✓ 10-bit resolution
- **3 independent timers/counters**
- **Watch-dog timer**
- **Analogue comparator module with**

  Two analogue comparators

PWM output steering control

Enhanced USART module

- Supports RS-485, RS-232, …
- Auto-Baud Detect
- **etc**

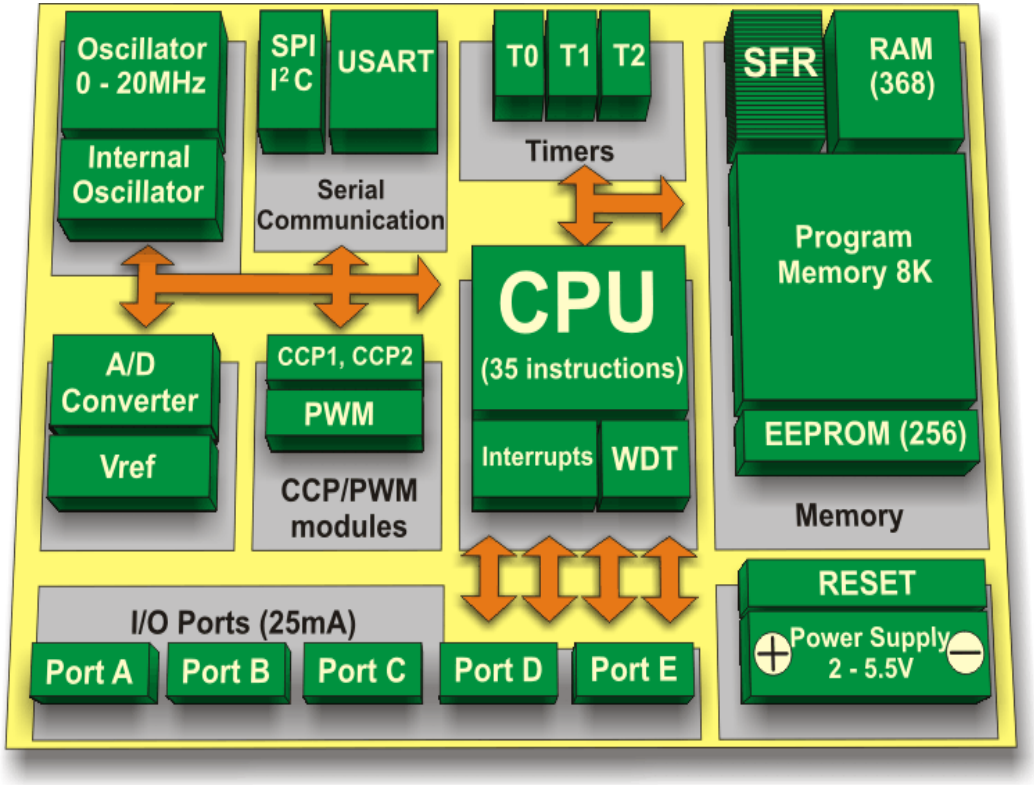

PIC16F887 Internal Block Diagram

PIC16F877 Internal Block Diagram

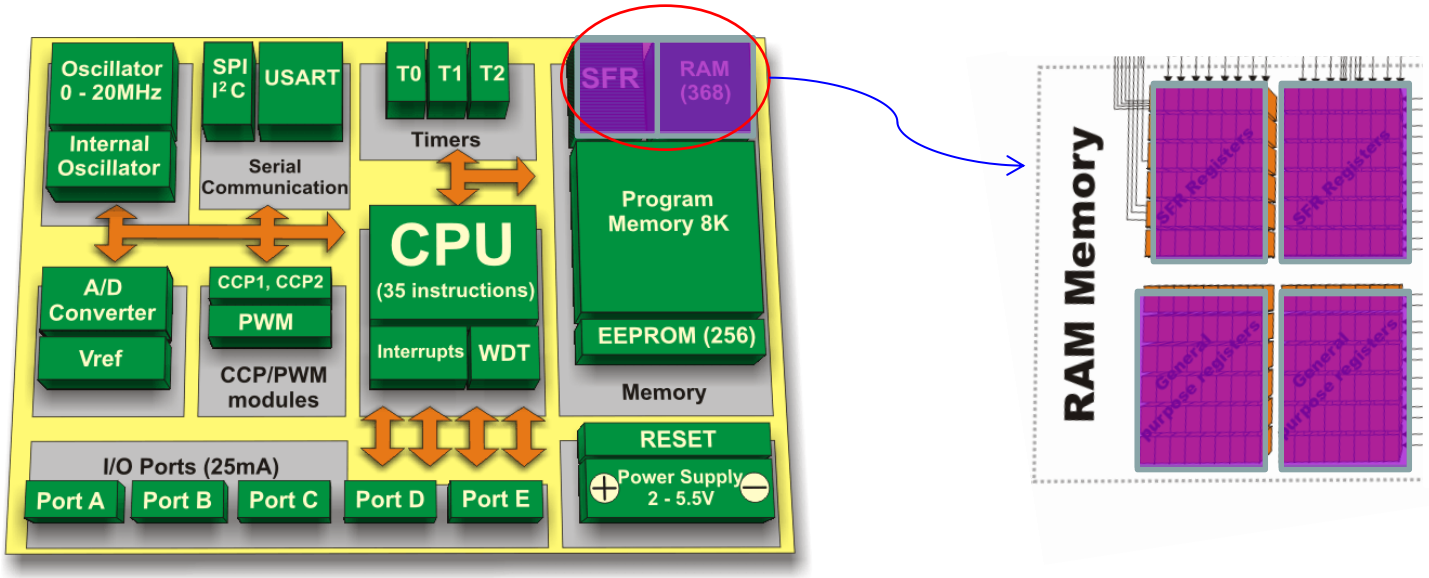

GPR (General Purpose Register): Dedicated to RAM memory specified into RAM. SFR (Special Function Register): used to control peripherals and microprocessors, their bits are physically connected to particular circuits on the chip (A/D converter, serial communication module, etc.), any change of their contents directly affects the operation of the microcontroller or some of its circuits. For example, by changing the TRISA register, the function of each port A pin can be changed in a way it acts as input or output.

PIC16F877 Internal Block Diagram

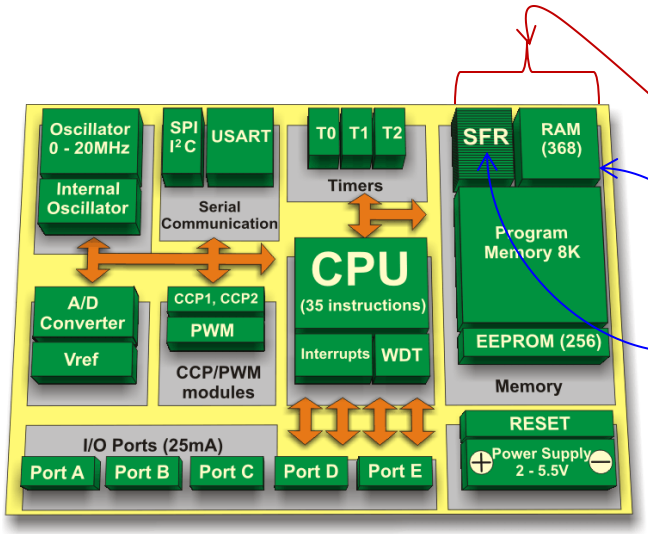

DATA Memory is also known as Register File :

- It is a RAM Memory partitioned into 4 banks which contains:

1. **GPR** (General Purpose Register). used to a normal temporary storage space (same as RAM)

2. **SFR** (Special Function Register) used to control peripherals and PIC behaviors, their bits are physically connected to particular circuits on the chip (A/D converter, serial communication module, etc.), any change of their contents directly affects the operation of the microcontroller or some of its circuits. For example, by changing the TRISA register, the function of each port A pin can be changed in a way it acts as input or output.

PIC16F877 Internal Block Diagram

All of the GPR and SFR registers are divided in four memory banks

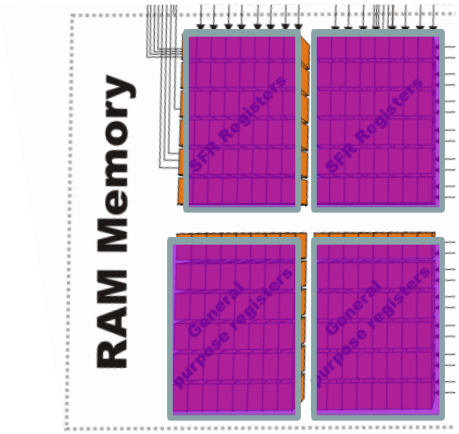

Addr.	Name	Addr.	Name	Addr.	Name	Addr.	Name
00h	INDF	80h	INDF	100h	INDF	180h	INDF
01h	TMR0	81h	OPTION_REG	101h	TMR0	181h	OPTION_REG
02h	PCL	82h	PCL	102h	PCL	182h	PCL
03h	STATUS	83h	STATUS	103h	STATUS	183h	STATUS
04h	FSR	84h	FSR	104h	FSR	184h	FSR
05h	PORTA	85h	TRISA	105h	WDTCON	185h	SRCON
06h	PORTB	86h	TRISB	106h	PORTB	186h	TRISB
07h	PORTC	87h	TRISC	107h	CM1CON0	187h	BAUDCTL
08h	PORTD	88h	TRISD	108h	CM2CON0	188h	ANSEL
09h	PORTE	89h	TRISE	109h	CM2CON1	189h	ANSELH
0Ah	PCLATH	8Ah	PCLATH	10Ah	PCLATH	18Ah	PCLATH
0Bh	INTCON	8Bh	INTCON	10Bh	INTCON	18Bh	INTCON
0Ch	PIR1	8Ch	PIE1	10Ch	EEDAT	18Ch	EECON1
0Dh	PIR2	8Dh	PIE2	10Dh	EEADR	18Dh	EECON2
0Eh	TMR1L	8Eh	PCON	10Eh	EEDATH	18Eh	Not Used
0Fh	TMR1H	8Fh	OSCCON	10Fh	EEADRH	18Fh	Not Used
10h	T1CON	90h	OSCTUNE	110h		190h	
11h	TMR2	91h	SSPCON2				
12h	T2CON	92h	PR2				
13h	SSPBUF	93h	SSPADD				
14h	SSPCON	94h	SSPSTAT				
15h	CCPR1L	95h	WPUB				
16h	CCPR1H	96h	IOCB				
17h	CCP1CON	97h	VRCON				
18h	RCSTA	98h	TXSTA				
19h	TXREG	99h	SPBRG				
1Ah	RCREG	9Ah	SPBRGH				
1Bh	CCPR2L	9Bh	PWM1CON				
1Ch	CCPR2H	9Ch	ECCPAS				
1Dh	CCP2CON	9Dh	PSTRCON				
1Eh	ADRESH	9Eh	ADRESL				
1Fh	ADCON0	9Fh	ADCON1				
20h	General Purpose Registers 96 bytes	A0h	General Purpose Registers 80 bytes		General Purpose Registers 96 bytes		General Purpose Registers 96 bytes
7Fh		FFh		17Fh		1EFh	
	Bank 0		**Bank 1**		**Bank 2**		**Bank 3**

PIC16F877 Internal Block Diagram

SFRs bank 0

Address	Name	Bit7	Bit6	Bit5	Bit4	Bit3	Bit2	Bit1	Bit0
00h	INDF	Indirect register							
01h	TMR0	Timer T0 Register							
02h	PCL	Least Significant Byte of Program Counter							
03h	STATUS	IRP	RP1	RP0	TO	PD	Z	DC	C
04h	FSR	Indirect Data Memory Address Pointer							
05h	PORTA	RA7	RA6	RA5	RA4	RA3	RA2	RA1	RA0
06h	PORTB	RB7	RB6	RB5	RB4	RB3	RB2	RB1	RB0
07h	PORTC	RC7	RC6	RC5	RC4	RC3	RC2	RC1	RC0
08h	PORTD	RD7	RD6	RD5	RD4	RD3	RD2	RD1	RD0
09h	PORTE	-	-	-	-	RE3	RE2	RE1	RE0
0Ah	PCLATH	-	-	-	Upper 5 bits of Program Counter				
0Bh	INTCON	GIE	PEIE	T0IE	INTE	RBIE	T0IF	INTF	RBIF
0Ch	PIR1	-	ADIF	RCIF	TXIF	SSPIF	CCP1IF	TMR2IF	TMR1IF
0Dh	PIR2	OSFIF	C2IF	C1IF	EEIF	BCLIF	ULPWUIF	-	CCP2IF
0Eh	TMR1L	Least Significant Byte of the 16-bit Timer TMR0							
0Fh	TMR1H	Most Significant Byte of the 16-bit Timer TMR0							
10h	T1CON	T1GINV	TMR1GE	T1CKPS1	T1CKPS0	T1OSCEN	T1SYNC	TMR1CS	TMR1ON
11h	TMR2	Timer T2 Register							
12h	T2CON	-	TOUTPS3	TOUTPS2	TOUTPS1	TOUTPS0	TMR2ON	T2CKPS1	T2CKPS0
13h	SSPBUF	Synchronous Serial Port Receive Buffer/Transmit Register							
14h	SSPCON	WCOL	SSPOV	SSPEN	CKP	SSPM3	SSPM2	SSPM1	SSPM0
15h	CCPR1L	Capture/ComparePWM Register 1 Low Byte (LSB)							
16h	CCPR1H	Capture/ComparePWM Register 1 High Byte (LSB)							
17h	CCP1CON	P1M1	P1M0	DC1B1	DC1B0	CCP1M3	CCP1M2	CCP1M1	CCP1M0
18h	RCSTA	SPEN	RX9	SREN	CREN	ADDEN	FERR	OERR	RX9D
19h	TXREG	EUSART Transmit Data Register							
1Ah	RCREG	EUSART Receive Data Register							
1Bh	CCPR2L	Capture/Compare PWM Register 1 Low Byte (LSB)							
1Ch	CCPR2H	Capture/Compare PWM Register 1 High Byte (LSB)							
1Dh	CCP2CON	-	-	DC2B1	DC2B0	CCP2M3	CCP2M2	CCP2M1	CCP2M0
1Eh	ADRESH	A/D Result Register High Byte							
1Fh	ADCON0	ADCS1	ADCS0	CHS3	CHS2	CHS1	CHS0	GO/DONE	ADON

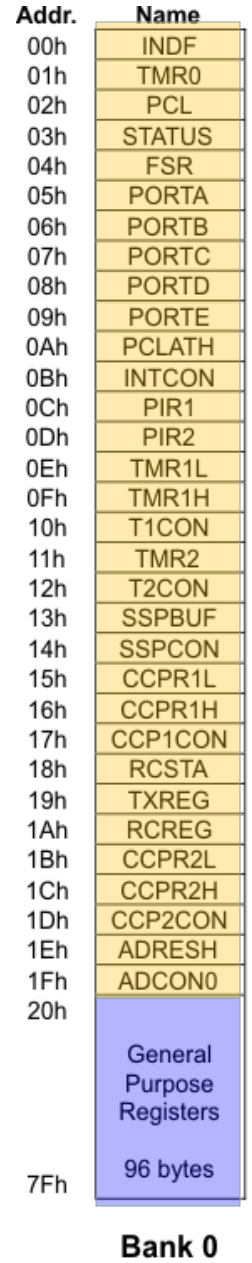

PIC16F877 Internal Block Diagram

SFRs bank 1

Address	Name	Bit7	Bit6	Bit5	Bit4	Bit3	Bit2	Bit1	Bit0
80h	INDF	Indirect Register							
81h	OPTION_REG	RBPU	INTEDG	T0CS	T0SE	PSA	PS2	PS1	PS0
82h	PCL	Least Significant Byte of Program Counter							
83h	STATUS	IRP	RP1	RP0	TO	PD	Z	DC	C
84h	FSR	Indirect Data Memory Address Pointer							
85h	TRISA	TRISA7	TRISA6	TRISA5	TRISA4	TRISA3	TRISA2	TRISA1	TRISA0
86h	TRISB	TRISB7	TRISB6	TRISB5	TRISB4	TRISB3	TRISB2	TRISB1	TRISB0
87h	TRISC	TRISC7	TRISC6	TRISC5	TRISC4	TRISC3	TRISC2	TRISC1	TRISC0
88h	TRISD	TRISD7	TRISD6	TRISD5	TRISD4	TRISD3	TRISD2	TRISD1	TRISD0
89h	TRISE	-	-	-	-	TRISE3	TRISE2	TRISE1	TRISE0
8Ah	PCLATH	-	-	-	Upper 5 bits of the Ptogram Counter				
8Bh	INTCON	GIE	PEIE	T0IE	INTE	RBIE	T0IF	INTF	RBIF
8Ch	PIE1	-	ADIE	RCIE	TXIE	SSPIE	CCP1IE	TMR2IE	TMR1IE
8Dh PIE2		OSFIE	C2IE	C1IE	EEIE	BCLIE	ULPWUIE	-	CCP2IE
8Eh	PCON	-	-	ULPWUE	SBOREN	-	-	POR	BOR
8Fh	OSCCON	-	IRCF2	IRCF1	IRCF0	OSTS	HTS	LTS	SCS
90h	OSCTUNE	-	-	-	TUN4	TUN3	TUN2	TUN1	TUN0
91h	SSPCON2	GCEN	ACKSTAT	ACKDT	ACKEN	RCEN	PEN	RSEN	SEN
92h	PR2	Timer T2 Period Register							
93h	SSPADD	Synchronous Serial Port (I^2C mode) Address Register							
93h	SSPMSK	MSK7	MSK6	MSK5	MSK4	MSK3	MSK2	MSK1	MSK0
94h	SSPSTAT	SMP	CKE	D/A	P	S	R/W	UA	BF
95h	WPUB	WPUB7	WPUB6	WPUB5	WPUB4	WPUB3	WPUB2	WPUB1	WPUB0
96h	IOCB	IOCB7	IOCB6	IOCB5	IOCB4	IOCB3	IOCB2	IOCB1	IOCB0
97h	VRCON	VREN	VROE	VRR	VRSS	VR3	VR2	VR1	VR0
98h	TXSTA	CSRC	TX9	TXEN	SYNC	SENDB	BRGH	TRMT	TX9D
99h	SPBRG	BRG7	BRG6	BRG5	BRG4	BRG3	BRG2	BRG1	BRG0
9Ah	SPBRGH	BRG15	BRG14	BRG13	BRG12	BRG11	BRG10	BRG9	BRG8
9Bh	PWM1CON	PRSEN	PDC6	PDC5	PDC4	PDC3	PDC2	PDC1	PDC0
9Ch	ECCPAS	ECCPASE	ECCPAS2	ECCPAS1	ECCPAS0	PSSAC1	PSSAC0	PSSBD1	PSSBD0
9Dh	PSTRCON	-	-	-	STRSYNC	STRD	STRC	STRB	STRA
9Eh	ADRESL	A/D Result Register Low Byte							
9Fh	ADCON1	ADFM	-	VCFG1	VCFG0	-	-	-	-

PIC16F877 Internal Block Diagram

SFRs bank 2

Address	Name	Bit7	Bit6	Bit5	Bit4	Bit3	Bit2	Bit1	Bit0
100h	INDF	Indirect register							
101h	TMR0	Timer T0 Register							
102h	PCL	Least Significant Byte of the Program Counter							
103h	STATUS	IRP	RP1	RP0	TO	PD	Z	DC	C
104h	FSR	Indirect Data Memory Address Pointer							
105h	WDTCON	-	-	-	WDTPS3	WDTPS2	WDTPS1	WDTPS0	SWDTEN
106h	PORTB	RB7	RB6	RB5	RB4	RB3	RB2	RB1	RB0
107h	CM1CON0	C1ON	C1OUT	C1OE	C1POL	-	C1R	C1CH1	C1CH0
108h	CM2CON0	C2ON	C2OUT	C2OE	C2POL	-	C2R	C2CH1	C2CH0
109h	CM2CON1	MC1OUT	MC2OUT	C1RSEL	C2RSEL	-	-	T1GSS	C2SYNC
10Ah	PCLATH	-	-	-	Upper 5 bits of the Program Counter				
10Bh	INTCON	GIE	PEIE	T0IE	INTE	RBIE	T0IF	INTF	RBIF
10Ch	EEDAT	EEDAT7	EEDAT6	EEDAT5	EED AT4	EEDAT3	EEDAT2	EEDAT1	EEDAT0
10Dh	EEADR	EEADR7	EEADR6	EEADR5	EEADR4	EEADR3	EEADR2	EEADR1	EEADR0
10Eh	EEDATH	-	-	EEDATH5	EEDATH4	EEDATH3	EEDATH2	EEDATH1	EEDATH0
10Fh	EEADRH	-	-	-	EEADRH4	EEADRH3	EEADRH2	EEADRH1	EEADRH0

SFRs bank 3

Address	Name	Bit7	Bit6	Bit5	Bit4	Bit3	Bit2	Bit1	Bit0
180h	INDF	Indirect Register							
181h	OPTION_REG	RBPU	INTEDG	T0CS	T0SE	PSA	PS2	PS1	PS0
182h	PCL	Least Significan Byte of the Program Counter							
183h	STATUS	IRP	RP1	RP0	TO	PD	Z	DC	C
184h	FSR	Indirect Data Memory Address Pointer							
185h	SRCON	SR1	SR0	C1SEN	C2REN	PULSS	PULSR	-	FVREN
186h	TRISB	TRISB7	TRISB6	TRISB5	TRISB4	TRISB3	TRISB2	TRISB1	TRISB0
187h	BAUDCTL	ABDOVF	RCIDL	-	SCKP	BRG16	-	WUE	ABDEN
188h	ANSEL	ANS7	ANS6	ANS5	ANS4	ANS3	ANS2	ANS1	ANS0
189h	ANSELH	-	-	ANS13	ANS12	ANS11	ANS10	ANS9	ANS8
19Ah	PCLATH	-	-	-	Upper 5 bits of the Program Counter				
19Bh	INTCON	GIE	PEIE	T0IE	INTE	RBIE	T0IF	INTF	RBIF
19Ch	EECON1	EEPGD	-	-	-	WRERR	WREN	WR	RD
19Dh	EECON2	EEPROM Control Register 2							

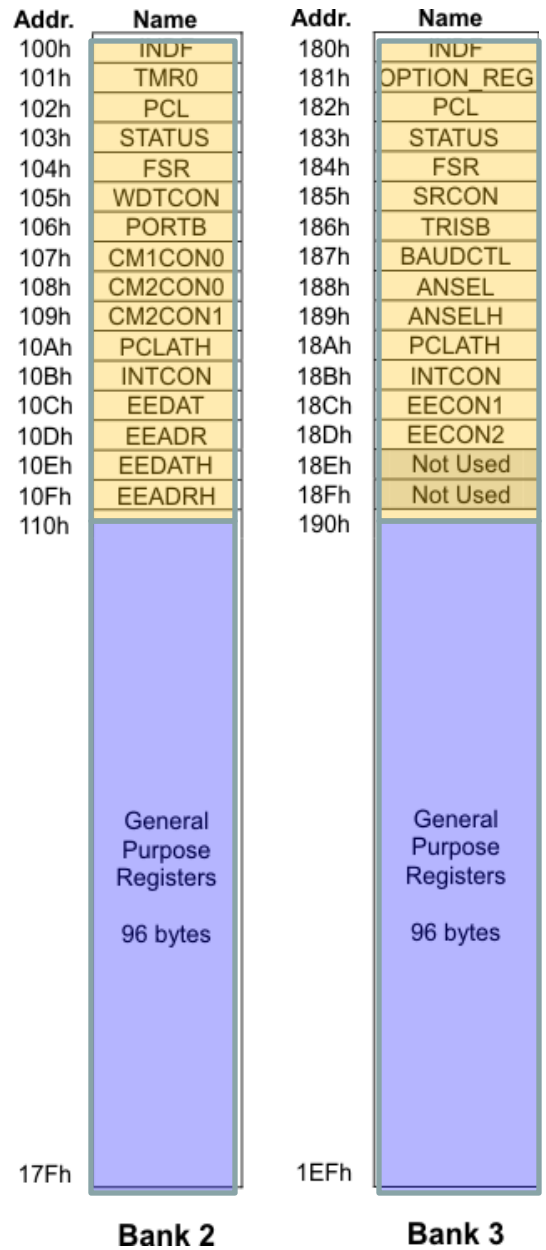

Special Function Registers of the PIC18 Family.

F80h	PORTA	FA0h	PIE2	FC0h	----		FE0h	BSR	
F81h	PORTB	FA1h	PIR2	FC1h	ADCON1		FE1h	FSR1L	
F82h	PORTC	FA2h	IPR2	FC2h	ADCON0		FE2h	FSR1H	
F83h	PORTD	FA3h	----	FC3h	ADRESL		FE3h	PLUSW1	*
F84h	PORTE	FA4h	----	FC4h	ADRESH		FE4h	PREINC1	*
F85h	----	FA5h	----	FC5h	SSPCON2		FE5h	POSTDEC1	*
F86h	----	FA6h	----	FC6h	SSPCON1		FE6h	POSTINC1	*
F87h	----	FA7h	----	FC7h	SSPSTAT		FE7h	INDF1	*
F88h	----	FA8h	----	FC8h	SSPADD		FE8h	WREG	
F89h	LATA	FA9h	----	FC9h	SSPBUF		FE9h	FSR0L	
F8Ah	LATB	FAAh	----	FCAh	T2CON		FEAh	FSR0H	
F8Bh	LATC	FABh	RCSTA	FCBh	PR2		FEBh	PLUSW0	*
F8Ch	LATD	FACh	TXSTA	FCCh	TMR2		FECh	PREINC0	*
F8Dh	LATE	FADh	TXREG	FCDh	T1CON		FEDh	POSTDEC0	*
F8Eh	----	FAEh	RCREG	FCEh	TMR1L		FEEh	POSTINC0	*
F8Fh	----	FAFh	SPBRG	FCFh	TMR1H		FEFh	INDF0	*
F90h	----	FB0h	----	FD0h	RCON		FF0h	INTCON3	
F91h	----	FB1h	T3CON	FD1h	WDTCON		FF1h	INTCON2	
F92h	TRISA	FB2h	TMR3L	FD2h	LVDCON		FF2h	INTCON	
F93h	TRISB	FB3h	TMR3H	FD3h	OSCCON		FF3h	PRODL	
F94h	TRISC	FB4h	----	FD4h	----		FF4h	PRODH	
F95h	TRISD	FB5h	----	FD5h	T0CON		FF5h	TABLAT	
F96h	TRISE	FB6h	----	FD6h	TMR0L		FF6h	TBLPTRL	
F97h	----	FB7h	----	FD7h	TMR0H		FF7h	TBLPTRH	
F98h	----	FB8h	----	FD8h	STATUS		FF8h	TBLPTRU	
F99h	----	FB9h	----	FD9h	FSR2L		FF9h	PCL	
F9Ah	----	FBAh	CCP2CON	FDAh	FSR2H		FFAh	PCLATH	
F9Bh	----	FBBh	CCPR2L	FDBh	PLUSW2	*	FFBh	PCLATU	
F9Ch	----	FBCh	CCPR2H	FDCh	PREINC2	*	FFCh	STKPTR	
F9Dh	PIE1	FBDh	CCP1CON	FDDh	POSTDEC2	*	FFDh	TOSL	
F9Eh	PIR1	FBEh	CCPR1L	FDEh	POSTINC2	*	FFEh	TOSH	
F9Fh	IPR1	FBFh	CCPR1H	FDFh	INDF2	*	FFFh	TOSU	

* - These are not physical registers.

Pin Assignment

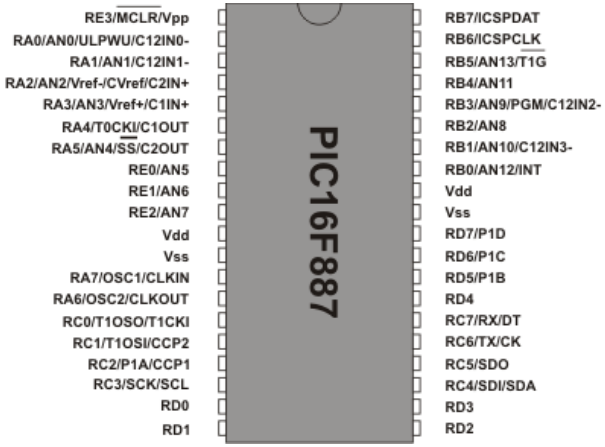

Name	Number (DIP 40)	Function	Description
RE3/MCLR/Vpp	1	RE3	General purpose input Port E
		MCLR	Reset pin. Low logic level on this pin resets microcontroller.
		Vpp	Programming voltage
RA0/AN0/ULPWU/C12IN0-	2	RA0	General purpose I/O port A
		AN0	A/D Channel 0 input
		ULPWU	Stand-by mode deactivation input
		C12IN0-	Comparator C1 or C2 negative input
RA1/AN1/C12IN1-	3	RA1	General purpose I/O port A
		AN1	A/D Channel 1
		C12IN1-	Comparator C1 or C2 negative input
RA2/AN2/Vref-/CVref/C2IN+	4	RA2	General purpose I/O port A
		AN2	A/D Channel 2
		Vref-	A/D Negative Voltage Reference input
		CVref	Comparator Voltage Reference Output
		C2IN+	Comparator C2 Positive Input
RA3/AN3/Vref+/C1IN+	5	RA3	General purpose I/O port A
		AN3	A/D Channel 3
		Vref+	A/D Positive Voltage Reference Input
		C1IN+	Comparator C1 Positive Input
RA4/T0CKI/C1OUT	6	RA4	General purpose I/O port A
		T0CKI	Timer T0 Clock Input
		C1OUT	Comparator C1 Output
RA5/AN4/SS/C2OUT	7	RA5	General purpose I/O port A
		AN4	A/D Channel 4
		SS	SPI module Input (*Slave Select*)
		C2OUT	Comparator C2 Output
RE0/AN5	8	RE0	General purpose I/O port E
		AN5	A/D Channel 5
RE1/AN6	9	RE1	General purpose I/O port E
		AN6	A/D Channel 6
RE2/AN7	10	RE2	General purpose I/O port E
		AN7	A/D Channel 7
Vdd	11	+	Positive supply
Vss	12	-	Ground (GND)

Pin Assignment

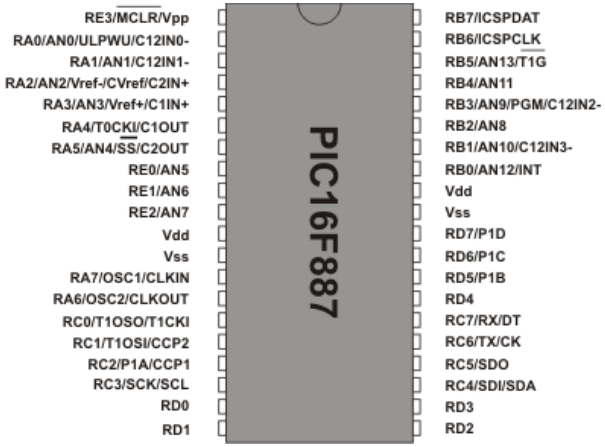

Name	Number (DIP 40)	Function	Description
RA7/OSC1/CLKIN	13	RA7	General purpose I/O port A
		OSC1	Crystal Oscillator Input
		CLKIN	External Clock Input
RA6/OSC2/CLKOUT	14	OSC2	Crystal Oscillator Output
		CLKO	Fosc/4 Output
		RA6	General purpose I/O port A
RC0/T1OSO/T1CKI	15	RC0	General purpose I/O port C
		T1OSO	Timer T1 Oscillator Output
		T1CKI	Timer T1 Clock Input
RC1/T1OSO/T1CKI	16	RC1	General purpose I/O port C
		T1OSI	Timer T1 Oscillator Input
		CCP2	CCP1 and PWM1 module I/O
RC2/P1A/CCP1	17	RC2	General purpose I/O port C
		P1A	PWM Module Output
		CCP1	CCP1 and PWM1 module I/O
RC3/SCK/SCL	18	RC3	General purpose I/O port C
		SCK	MSSP module Clock I/O in SPI mode
		SCL	MSSP module Clock I/O in I^2C mode
RD0	19	RD0	General purpose I/O port D
RD1	20	RD1	General purpose I/O port D
RD2	21	RD2	General purpose I/O port D
RD3	22	RD3	General purpose I/O port D
RC4/SDI/SDA	23	RC4	General purpose I/O port A
		SDI	MSSP module *Data* input in SPI mode
		SDA	MSSP module *Data* I/O in I^2C mode
RC5/SDO	24	RC5	General purpose I/O port C
		SDO	MSSP module *Data* output in SPI mode
RC6/TX/CK	25	RC6	General purpose I/O port C
		TX	USART Asynchronous Output
		CK	USART Synchronous Clock
RC7/RX/DT	26	RC7	General purpose I/O port C
		RX	USART Asynchronous Input
		DT	USART Synchronous Data

Pin Assignment

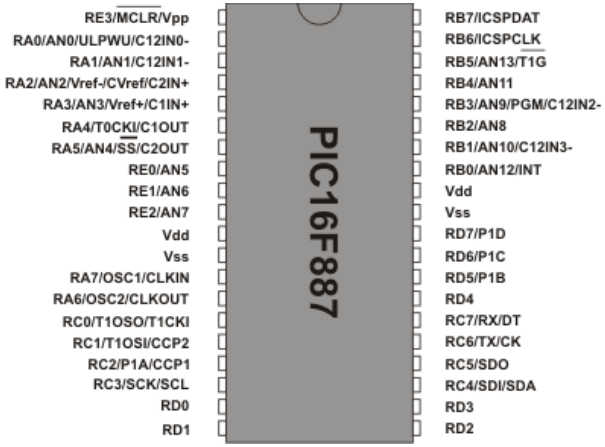

Name	Number (DIP 40)	Function	Description
RD4	27	RD4	General purpose I/O port D
RD5/P1B	28	RD5	General purpose I/O port D
		P1B	PWM Output
RD6/P1C	29	RD6	General purpose I/O port D
		P1C	PWM Output
RD7/P1D	30	RD7	General purpose I/O port D
		P1D	PWM Output
Vss	31	-	Ground (GND)
Vdd	32	+	Positive Supply
RB0/AN12/INT	33	RB0	General purpose I/O port B
		AN12	A/D Channel 12
		INT	External Interrupt
RB1/AN10/C12INT3-	34	RB1	General purpose I/O port B
		AN10	A/D Channel 10
		C12INT3-	Comparator C1 or C2 Negative Input
RB2/AN8	35	RB2	General purpose I/O port B
		AN8	A/D Channel 8
RB3/AN9/PGM/C12IN2-	36	RB3	General purpose I/O port B
		AN9	A/D Channel 9
		PGM	Programming enable pin
		C12IN2-	Comparator C1 or C2 Negative Input
RB4/AN11	37	RB4	General purpose I/O port B
		AN11	A/D Channel 11
RB5/AN13/T1G	38	RB5	General purpose I/O port B
		AN13	A/D Channel 13
		T1G	Timer T1 External Input
RB6/ICSPCLK	39	RB6	General purpose I/O port B
		ICSPCLK	Serial programming Clock
RB7/ICSPDAT	40	RB7	General purpose I/O port B
		ICSPDAT	Programming enable pin
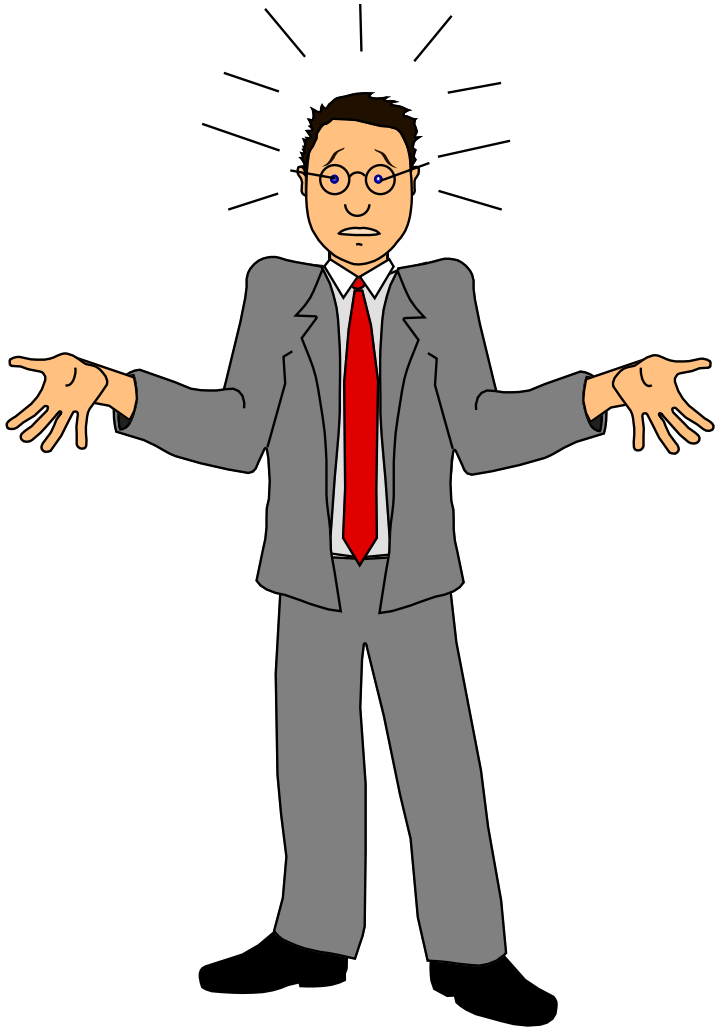
Questions