Microcontroller Basic Connecting

Microcontroller Basic Connecting

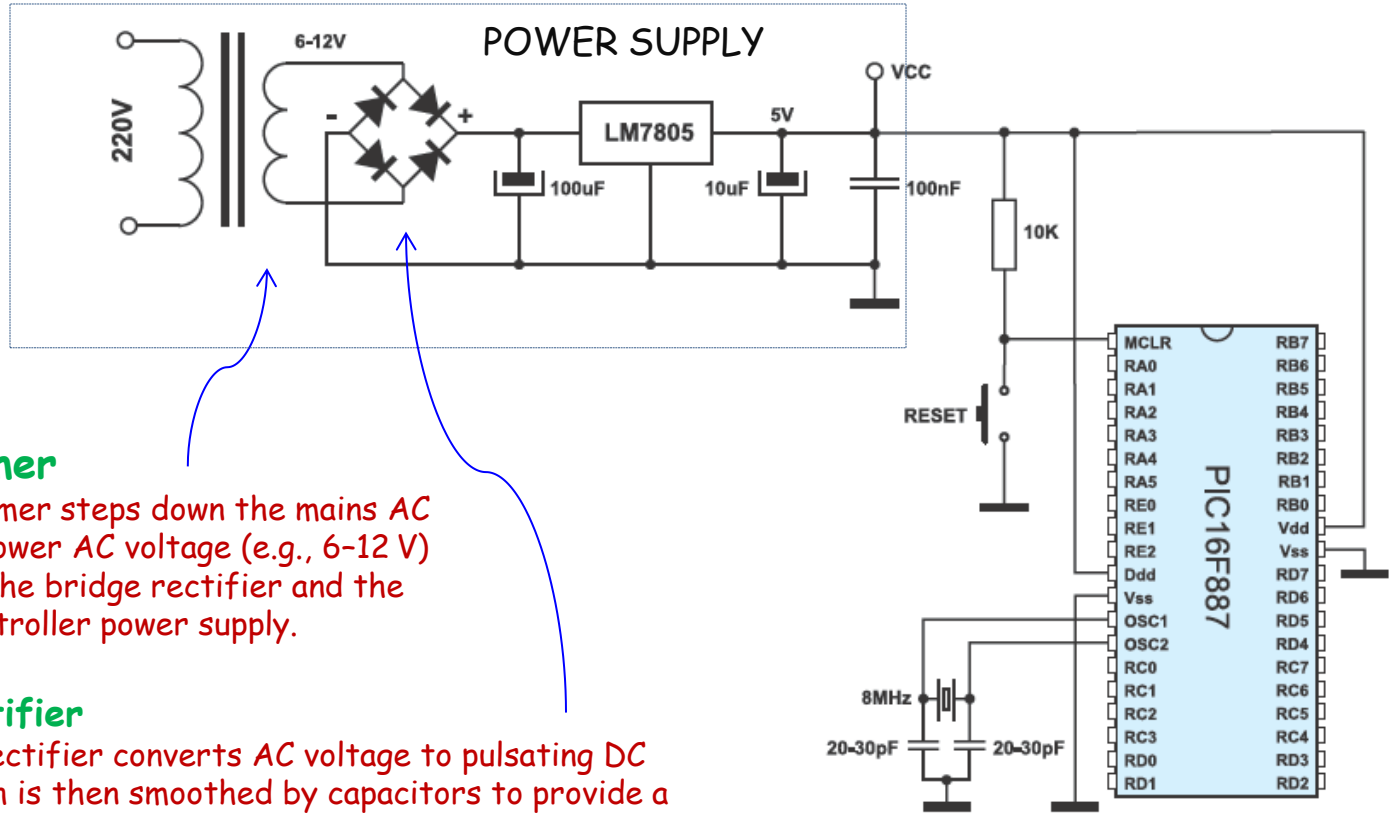

Transformer

The transformer steps down the mains AC voltage to a lower AC voltage (e.g., 6–12 V) suitable for the bridge rectifier and the PIC microcontroller power supply.

Bridge rectifier

The bridge rectifier converts AC voltage to pulsating DC voltage, which is then smoothed by capacitors to provide a stable input for the voltage regulator.

https://www.alldatasheet.com/datasheet-pdf/view/838007/TI1/LM7805.html

What's the purpose of two capacitors in parallel?

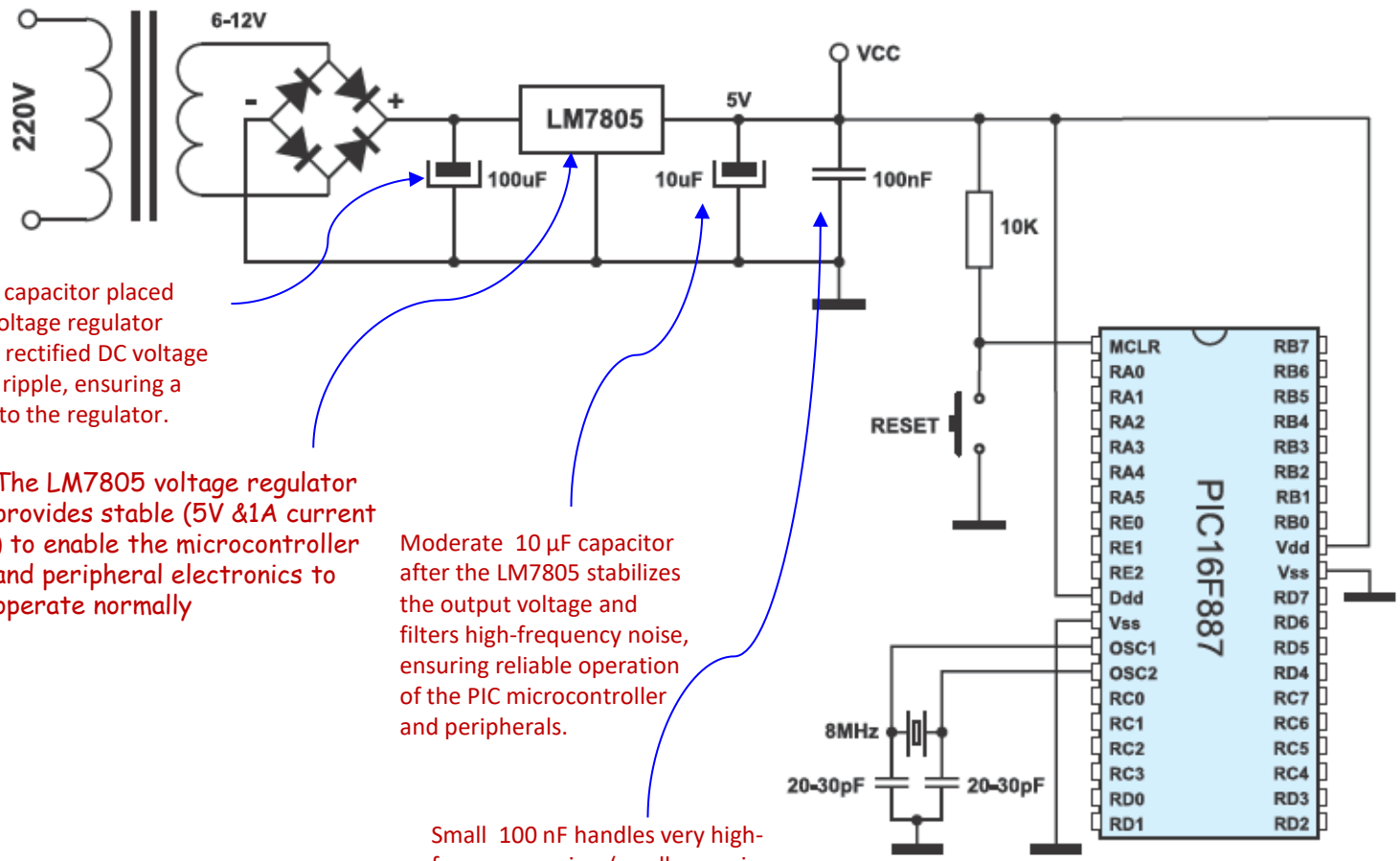

A big 100 µF capacitor placed before the voltage regulator smooths the rectified DC voltage and reduces ripple, ensuring a stable input to the regulator.

The LM7805 voltage regulator provides stable (5V &1A current) to enable the microcontroller and peripheral electronics to operate normally

Moderate 10 µF capacitor after the LM7805 stabilizes the output voltage and filters high-frequency noise, ensuring reliable operation of the PIC microcontroller and peripherals.

Small 100 nF handles very high-frequency noise. (small ceramic capacitors respond faster to very high-frequency spikes than electrolytics.)

Microcontroller Basic Connecting

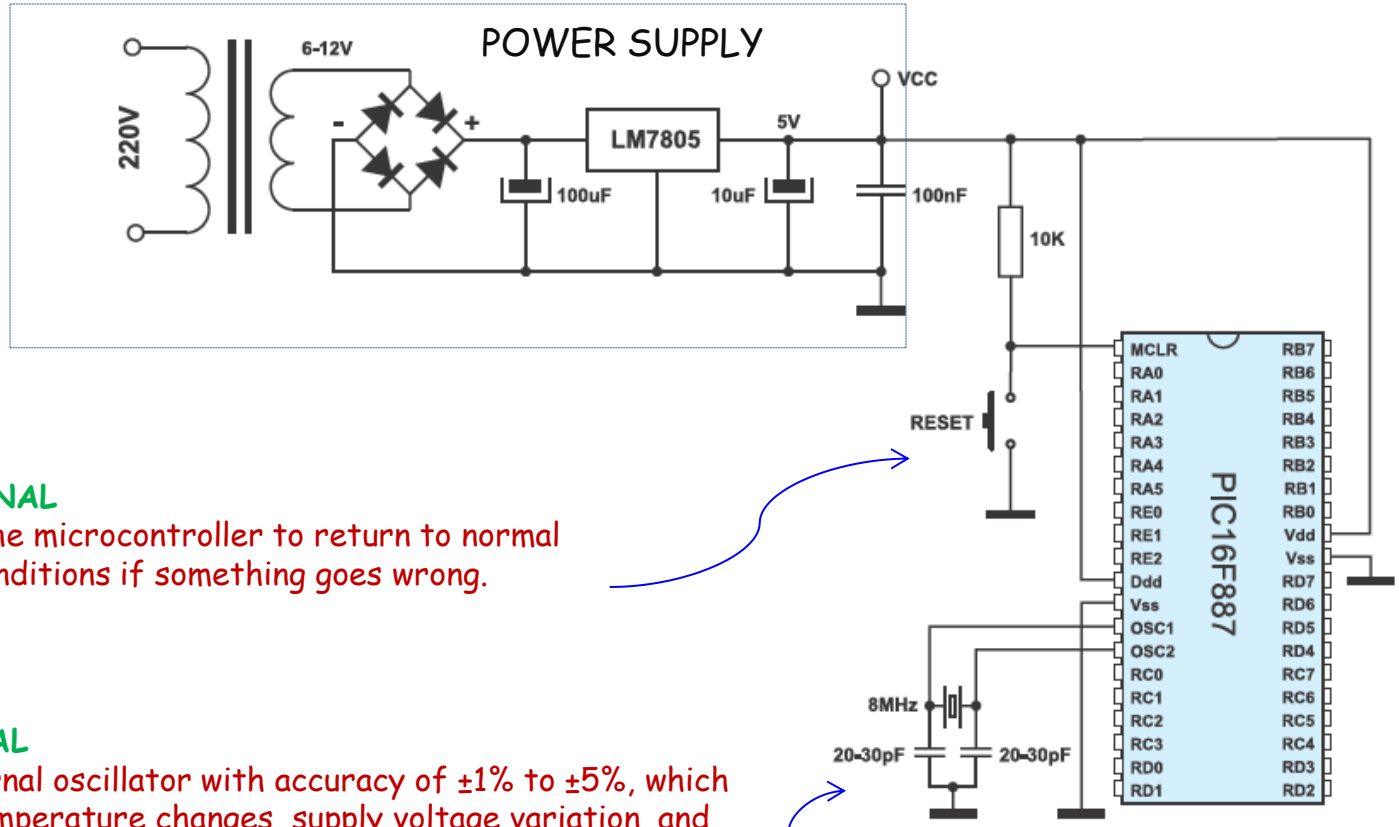

RESET SIGNAL

It enables the microcontroller to return to normal operating conditions if something goes wrong.

CLOCK SIGNAL

It has an internal oscillator with accuracy of ±1% to ±5%, which drifts with temperature changes, supply voltage variation, and device aging. It has limited speed and is suitable for simple, low-cost applications such as basic control tasks and simple timing applications.

An external oscillator (crystal or resonator) has typical accuracy of 0.002%–0.005% and is very stable over temperature and voltage. It is required for applications with strict timing tolerance.

https://www.alldatasheet.com/datasheet-pdf/view/838007/TI1/LM7805.html

The Microcontroller Oscillator

The Microcontroller Oscillator

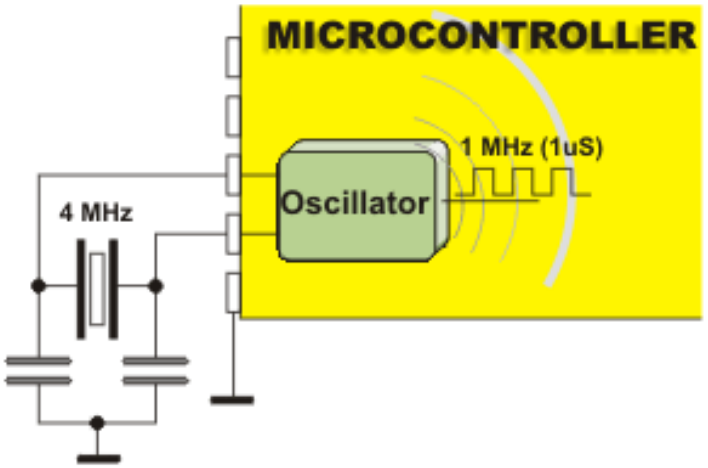

The choice of microcontroller clock source determines some of its fundamental operating characteristics. While "faster is better" in terms of operating speed and programming execution, faster is definitely worse in terms of power consumption. All timed elements within the microcontroller depend on the clock characteristics. If stable and accurate timing is required, then the clock oscillator must be stable and accurate.

Clock signal: may be generated by one of two built in External oscillator or Internal .

External oscillator: It is installed within the microcontroller and connected to the OSC1 and OSC2 pins. It is called "external" because it relies on external circuitry for the clock signal and frequency stabilization.

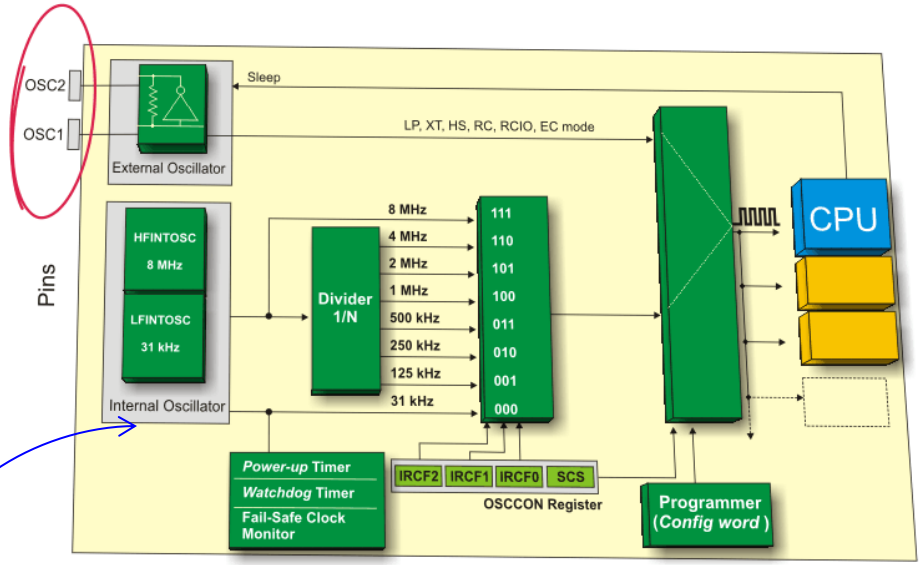

Addr.	Name
80h	INDF
81h	OPTION_REG
82h	PCL
83h	STATUS
84h	FSR
85h	TRISA
86h	TRISB
87h	TRISC
88h	TRISD
89h	TRISE
8Ah	PCLATH
8Bh	INTCON
8Ch	PIE1
8Dh	PIE2
8Eh	PCON
8Fh	OSCCON
90h	OSCTUNE
91h	SSPCON2
92h	PR2
93h	SSPADD
94h	SSPSTAT
95h	WPUB
96h	IOCB
97h	VRCON
98h	TXSTA
99h	SPBRG
9Ah	SPBRGH
9Bh	PWM1CON
9Ch	ECCPAS
9Dh	PSTRCON
9Eh	ADRESL
9Fh	ADCON1
A0h	General Purpose Registers 80 bytes
FFh	

Bank 1

Internal oscillator: consists of :

- The HFINTOSC is a high-frequency operates at 8MHz.
- The LFINTOSC is a low-frequency operates at 31 kHz.

OSCCON		R/W (1)	R/W (1)	R/W (0)	R (1)	R (0)	R (0)	R/W (0)
	-	IRCF2	IRCF1	IRCF0	OSTS	HTS	LTS	SCS
	Bit 7	Bit 6	Bit 5	Bit 4	Bit 3	Bit 2	Bit 1	Bit 0

Oscillator Control Register (OSCCON) Register

OSCCON	-	IRCF2	IRCF1	IRCF0	OSTS	HTS	LTS	SCS
		R/W (1)	R/W (1)	R/W (0)	R (1)	R (0)	R (0)	R/W (0)
	Bit 7	Bit 6	Bit 5	Bit 4	Bit 3	Bit 2	Bit 1	Bit 0

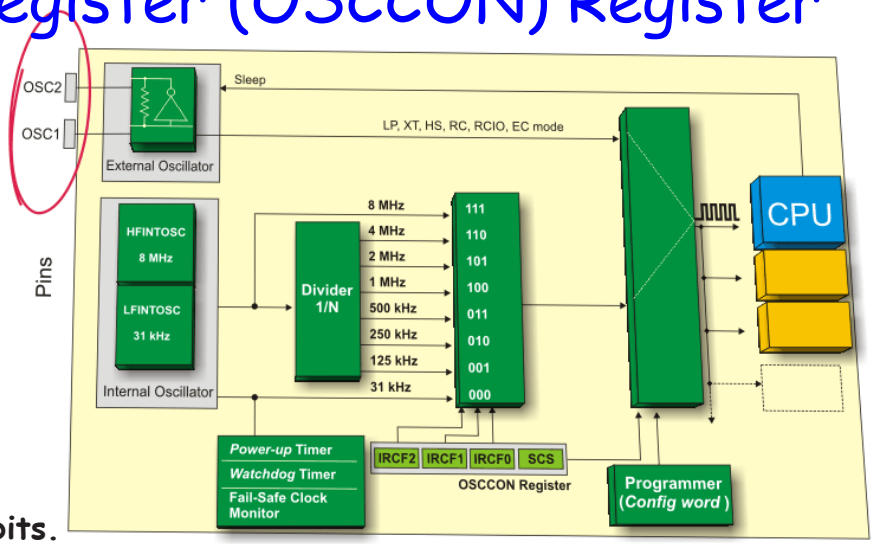

- **IRCF2-0 - Internal Oscillator Frequency Select bits.**
- **OSTS, Oscillator Status bit** indicates which clock source is currently in use
  - 1 – External
  - 0 - Internal

- **LTS.** indicates whether the **LFINTOSC** is a stable or not.
  - 1 - is stable.
  - 0 - is not stable

- **SCS - System Clock Select bit** determines which oscillator is to be used as a clock source.
  - 1 - Internal oscillator
  - 0 - External oscillator

EXTERNAL CLOCK MODES

The external oscillator can be configured to operate in one out of several modes, which enables it to operate at different speeds and use different components for frequency stabilization. Mode of operation is selected during the process of writing a program into the microcontroller.

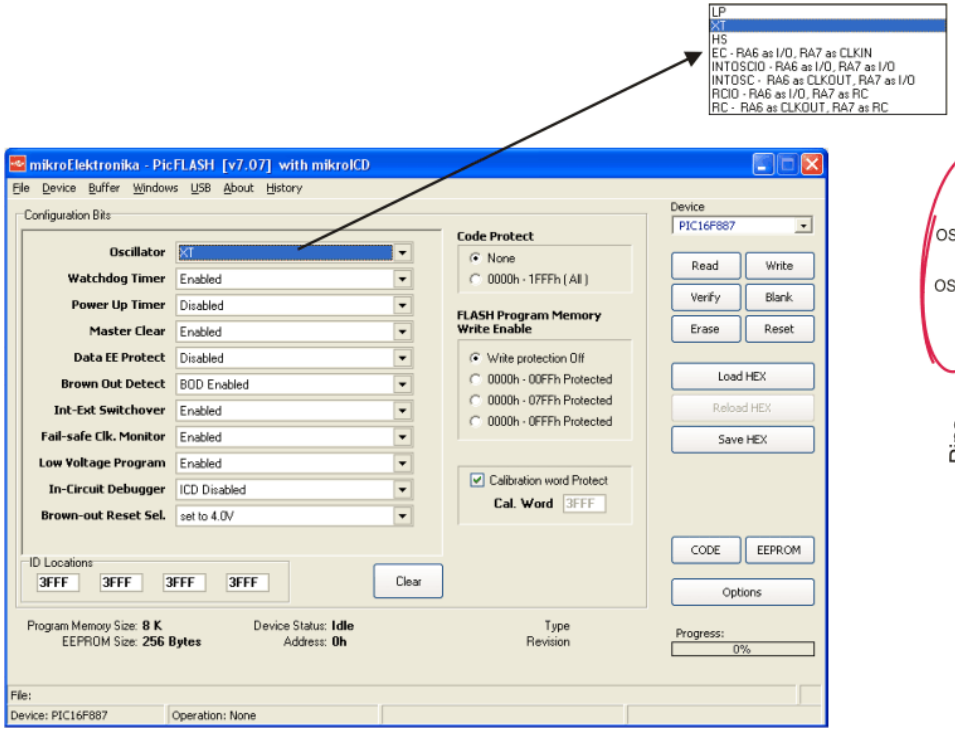

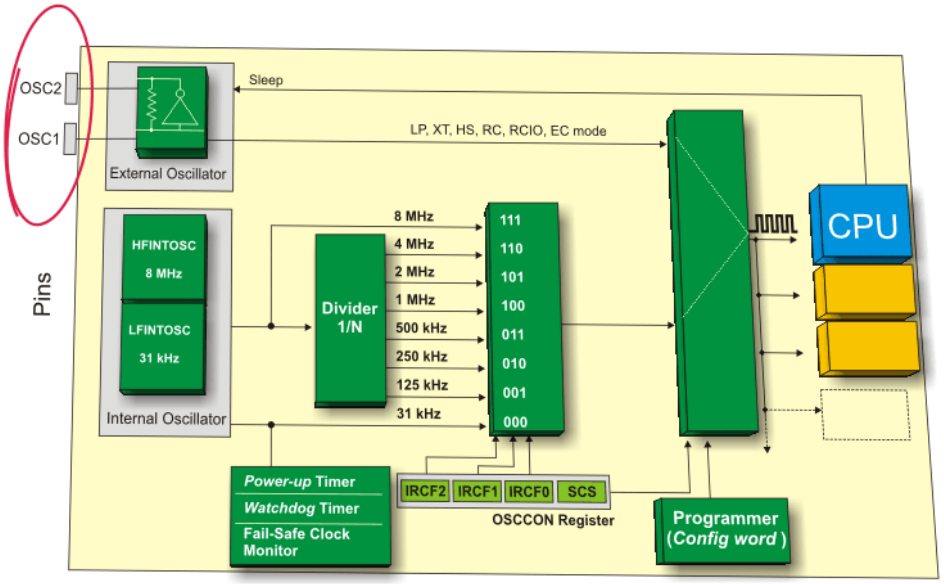

EXTERNAL CLOCK MODES

EC MODE:

- Uses external oscillator as a clock source through OSC1 pin.
- The maximum frequency of this clock is limited to 20 MHz.

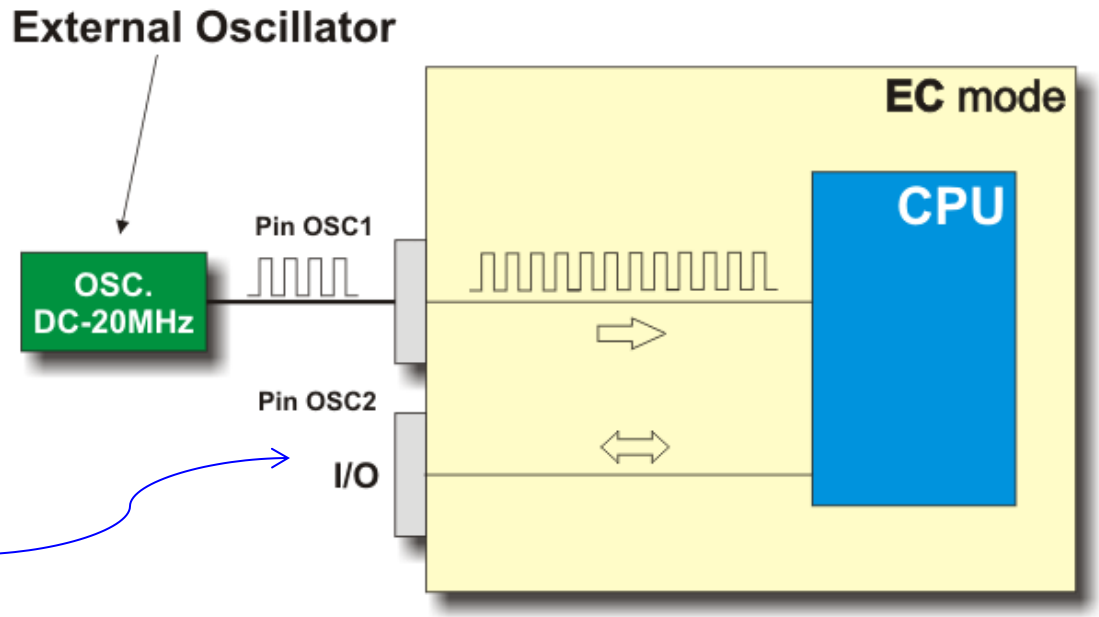

OSC2 is available as a general purpose I/O.

EXTERNAL CLOCK MODES

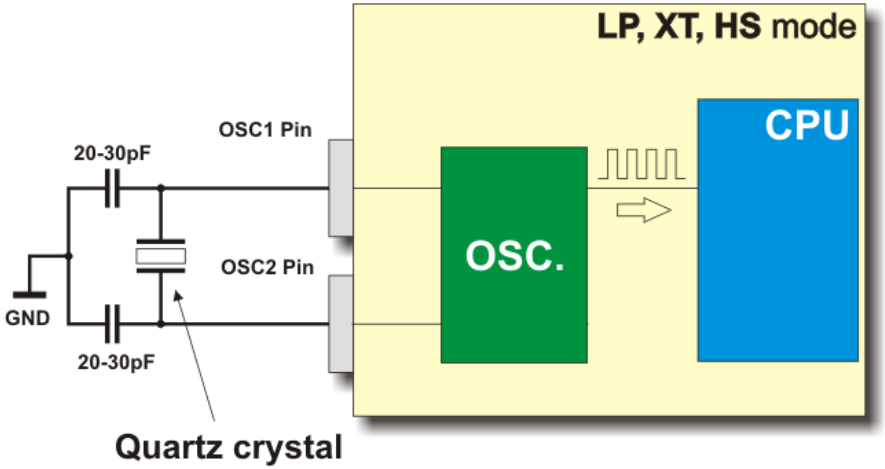

Quartz crystal: **LP, XT OR HS MODE**

LP mode - (Low Power):

1. This mode is designed to drive only 32.768 kHz crystals.
2. Gives the lowest power consumption.

XT mode:

1. Is used for intermediate-frequency quartz crystals up to 8 MHz.
2. The current consumption is the medium of the three modes.

HS mode - (High Speed):

1. Is used for high-frequency quartz crystals over 8 MHz.
2. The current consumption is the highest of the three modes.

EXTERNAL CLOCK MODES

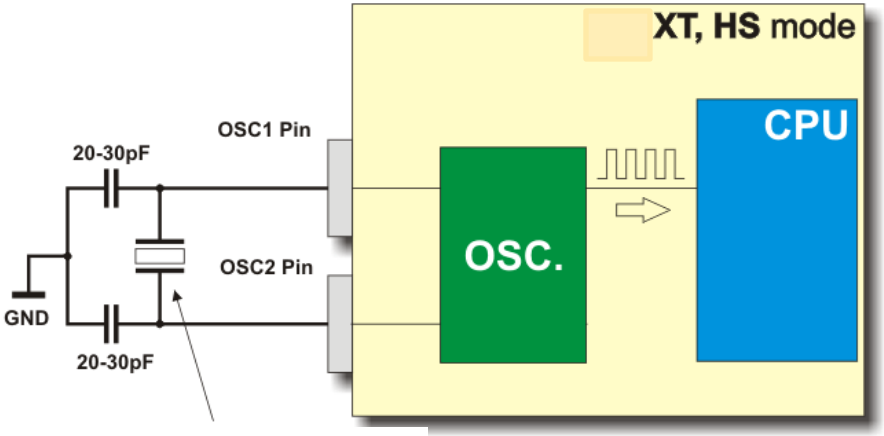

CERAMIC RESONATORS

CERAMIC RESONATORS: XT OR HS MODE

- They are used for clock frequencies ranging from 100 kHz to 20 MHz.
- Low cost oscillator (cheap).
- Have a bit poorer characteristics.

EXTERNAL CLOCK MODES

RC AND RCIO MODE

RC and RCIO modes use an external resistor and capacitor to generate the clock signal. Since the frequency is not precisely defined and varies with temperature and voltage, these modes are used in low-cost applications where precise timing is not required.

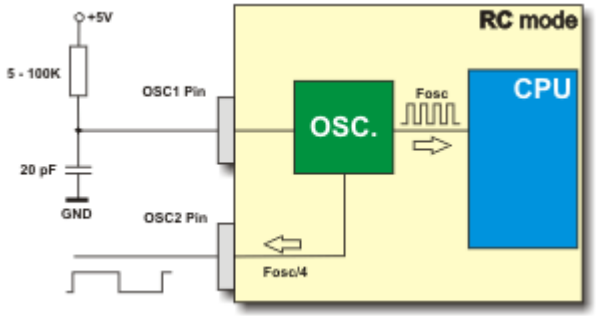

RC mode:

1. The RC circuit is connected to the OSC1 pin.
2. The OSC2 pin outputs the RC oscillator frequency divided by 4.

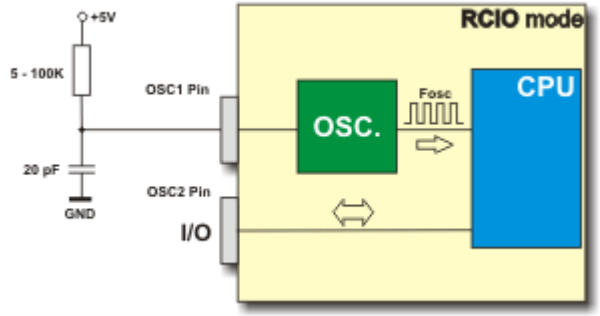

RCIO mode:

1. The RC circuit is connected to the OSC1 pin.
2. The OSC2 pin is used as an additional general-purpose I/O pin.

The frequency of such an oscillator is calculated according to this formula:

$$f = 1/T$$

f = frequency [Hz];

T = R * C = time constant [s];

R = resistor resistance [Ω]; and

C = capacitor capacity [F].

Note: Should not be used when any timing accuracy is required.

INTERNAL OSCILLATOR

consists of two separate oscillators :

- ✓ The HFINTOSC oscillator:
  - Operates at 8 MHz.
  - Its frequency can be set using bits of the OSCTUNE register.

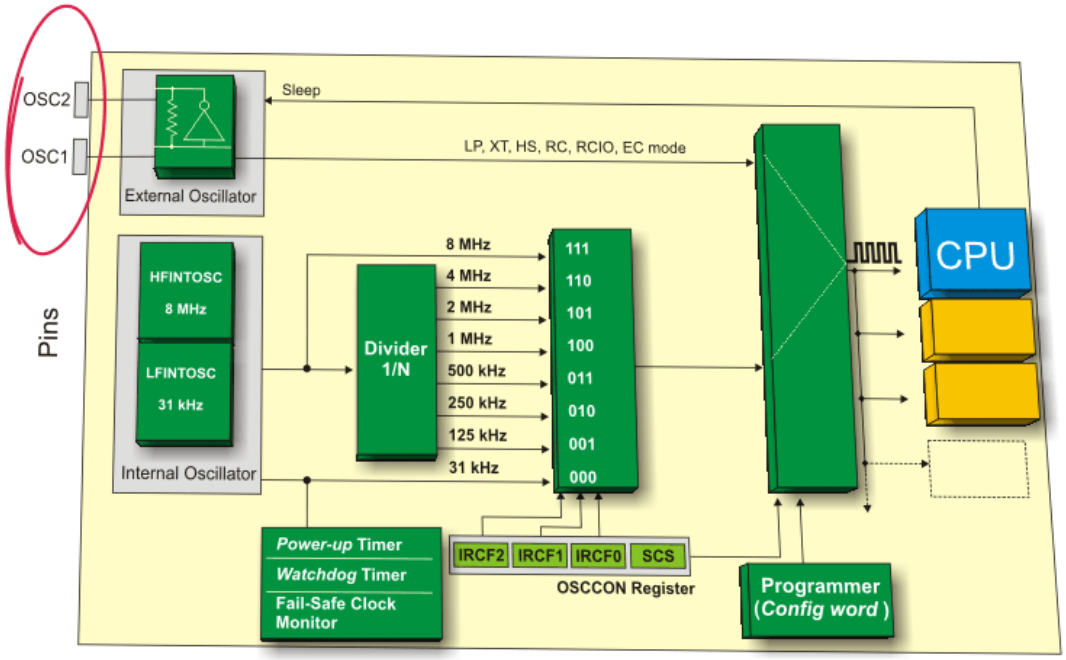

- ✓ The LFINTOSC
  - Operates at 31kHz.
  - Can operate in several modes selected using bits of the *Config Word* register. In other words, everything is performed within PC software prior to writing a program into the microcontroller.

INTERNAL OSCILLATOR MODE'S

INTOSC MODE:

- The OSC2 pin outputs selected internal oscillator frequency divided by 4.
- The OSC1 pin is available as a general purpose I/O

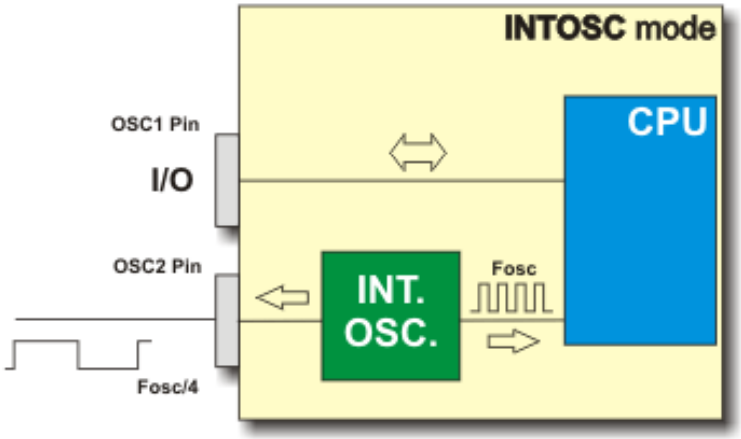

INTOSCIO MODE:

- Both pins are available as a general purpose I/O.

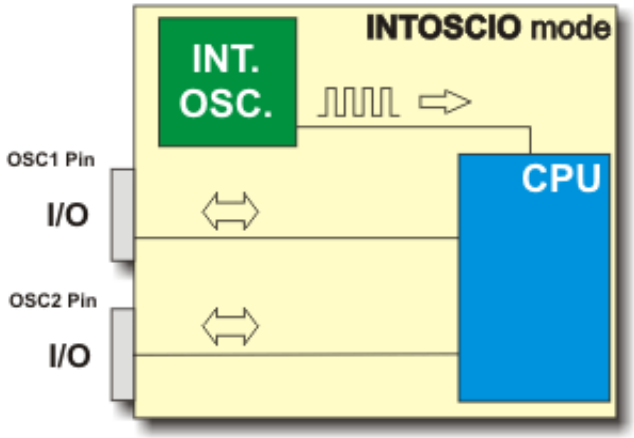

INTERNAL OSCILLATOR SETTINGS

The oscillator control register (*OSCCON*) controls the system clock and frequency selection options. It contains the following bits:

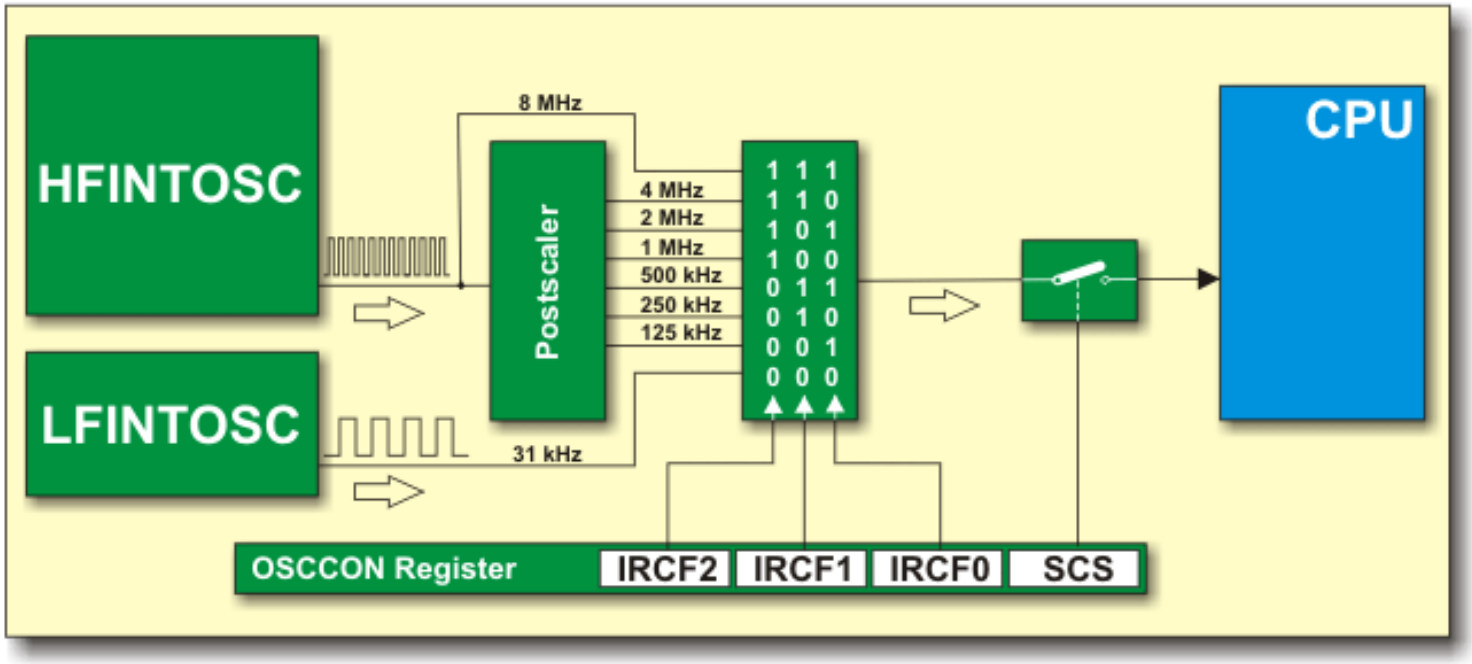

Addr.	Name
80h	INDF
81h	OPTION_REG
82h	PCL
83h	STATUS
84h	FSR
85h	TRISA
86h	TRISB
87h	TRISC
88h	TRISD
89h	TRISE
8Ah	PCLATH
8Bh	INTCON
8Ch	PIE1
8Dh	PIE2
8Eh	PCON
8Fh	OSCCON
90h	OSCTUNE
91h	SSPCON2
92h	PR2
93h	SSPADD
94h	SSPSTAT
95h	WPUB
96h	IOCB
97h	VRCON
98h	TXSTA
99h	SPBRG
9Ah	SPBRGH
9Bh	PWM1CON
9Ch	ECCPAS
9Dh	PSTRCON
9Eh	ADRESL
9Fh	ADCON1
A0h	General Purpose Registers 80 bytes
FFh	

Bank 1

INTERNAL OSCILLATOR SETTINGS

The oscillator control register (*OSCCON*):

Indicates whether (8 MHz - 125 kHz) high frequency internal oscillator operates in a stable way.
1 :HFINTOSC is stable; and
0 : HFINTOSC is not stable.

System Clock select bit:
1: Internal oscillator is used.
0 : External oscillator is used.

OSCCON	-	IRCF2	IRCF1	IRCF0	OSTS	HTS	LTS	SCS
		R/W (1)	R/W (1)	R/W (0)	R (1)	R (0)	R (0)	R/W (0)
	Bit 7	Bit 6	Bit 5	Bit 4	Bit 3	Bit 2	Bit 1	Bit 0

frequency selection bits

Indicates which oscillator is currently in use.
1 - External oscillator is in use
0 - One of internal oscillators is in use

Indicates whether (31 kHz) high frequency internal oscillator operates in a stable way.
1 : LFINTOSC is stable
0 : LFINTOSC is not stable
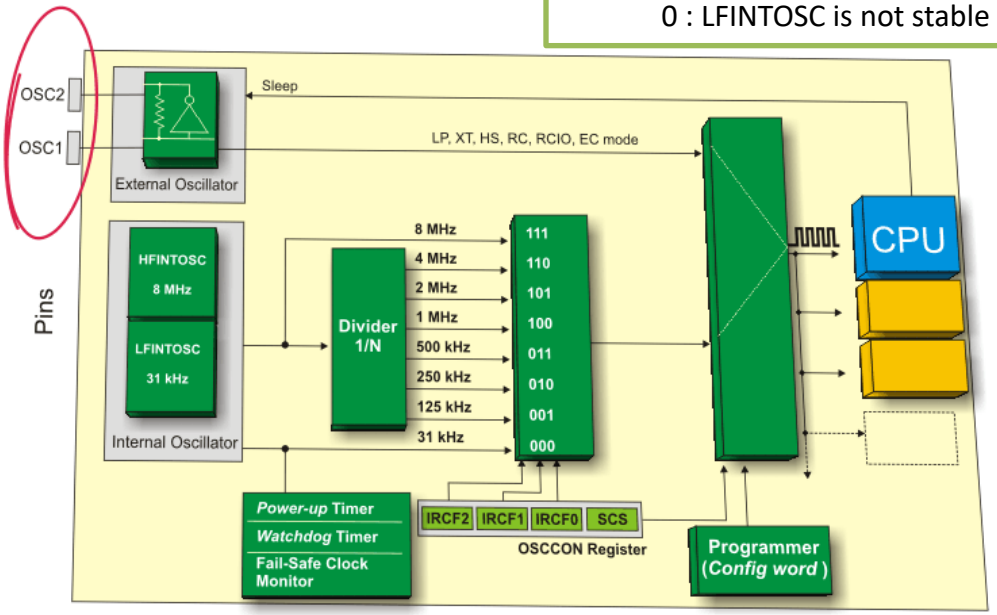
IRCF2	IRCF1	IRCF0	Frequency	OSC.
1	1	1	8 MHz	HFINTOSC
1	1	0	4 MHz	HFINTOSC
1	0	1	2 MHz	HFINTOSC
1	0	0	1 MHz	HFINTOSC
0	1	1	500 kHz	HFINTOSC
0	1	0	250 kHz	HFINTOSC
0	0	1	125 kHz	HFINTOSC
0	0	0	31 kHz	LFINTOSC