Programming Languages,

Programming in C

Embedded C

- Embedded C is a C-based programming language adapted for Microcontrollers.
- Embedded C follows American National Standards Institute (ANSI) C standards but it removes unnecessary features (like file handling) and adds specific functionalities for microcontrollers.
- Embedded C allows direct control of GPIOs, ADCs, PWM, UART, timers, interrupts, and other peripherals.
- If you already know C programming, learning MikroC is straightforward.
- Used Across Different Various microcontroller compilers Like: (MikroC, MPLAB XC8, IAR Embedded Workbench, and GCC for ARM) all use Embedded C with some minor variations.

Programming Languages, Programming in C

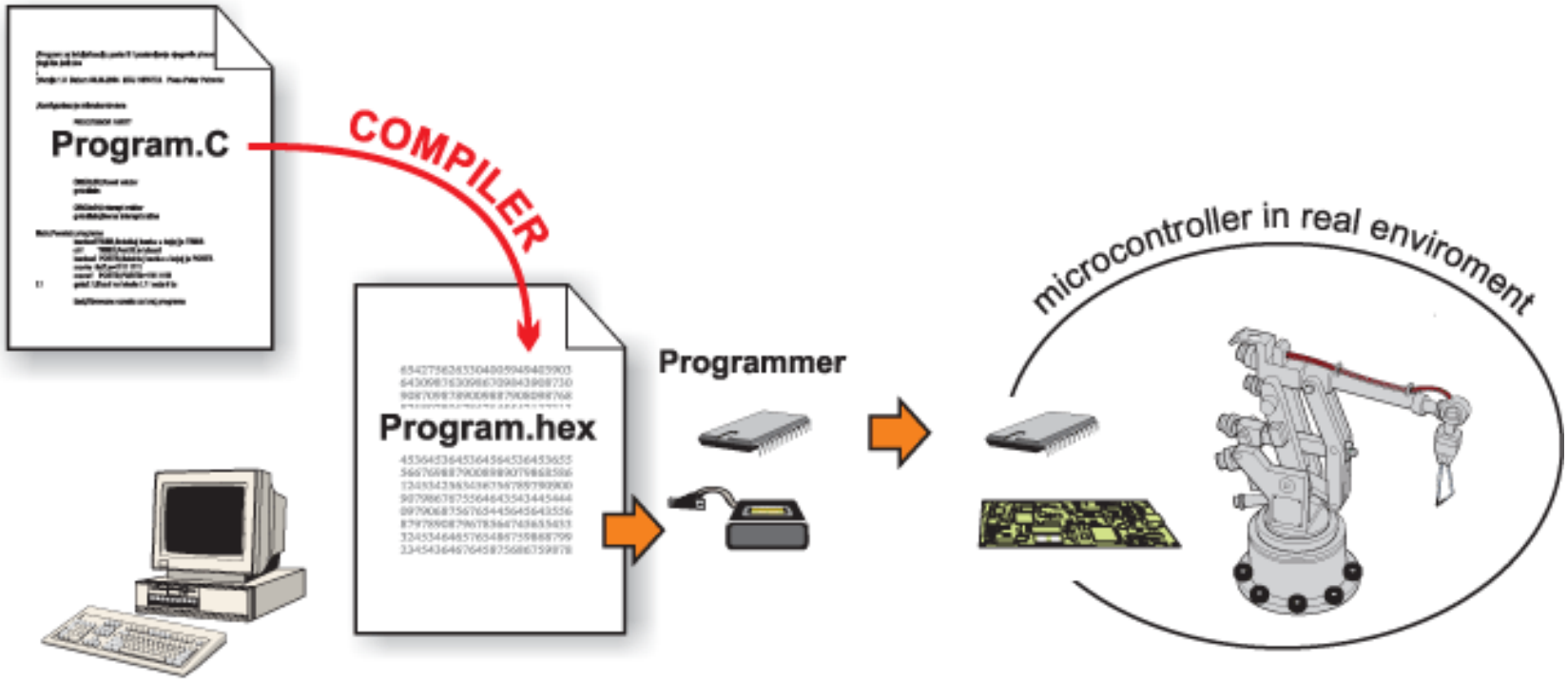

Programming Languages, Programming in C

The microcontroller needs to be programmed to be capable of performing anything useful.

The microcontroller executes the program loaded in its Flash memory.

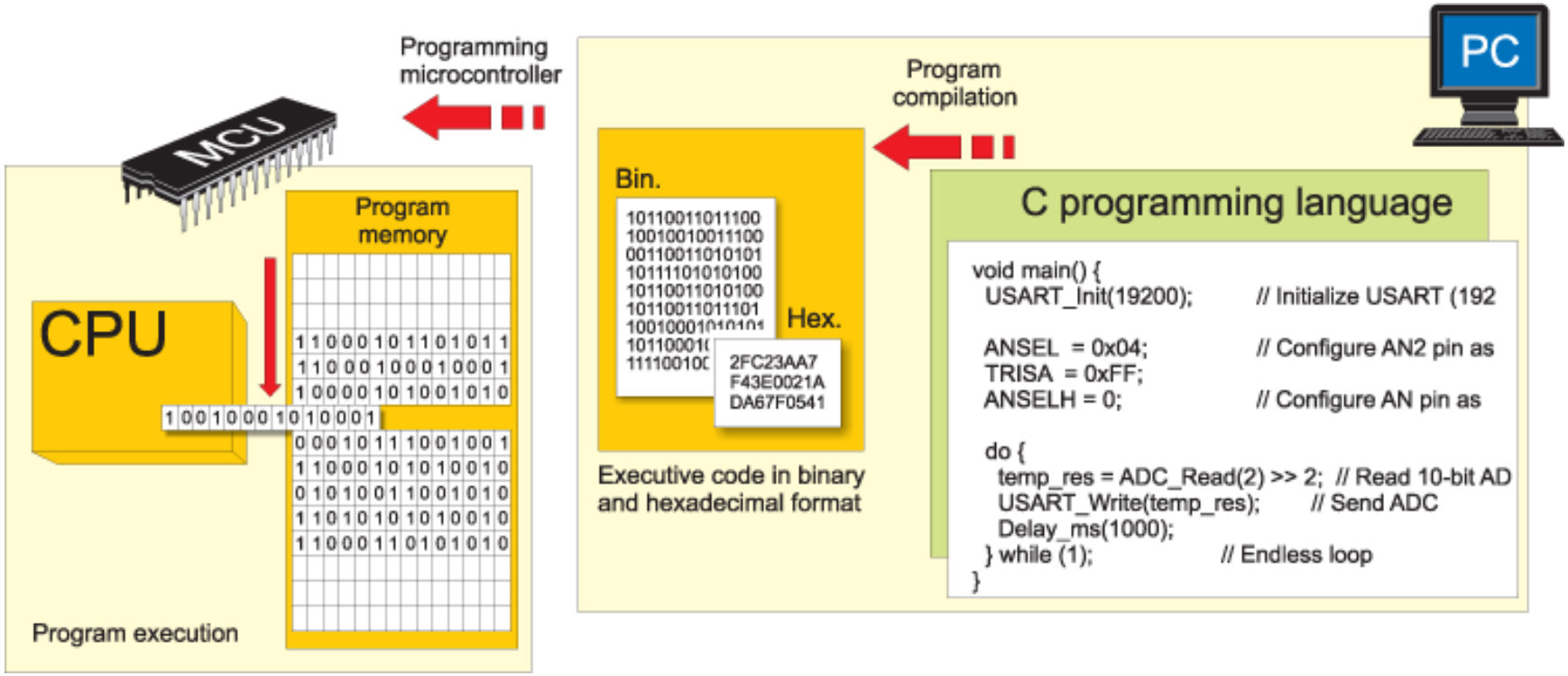

Programming Languages, Programming in C

Three basic level of programming language:

- Machine Languages.
- Assembly Languages.
- High level Languages.

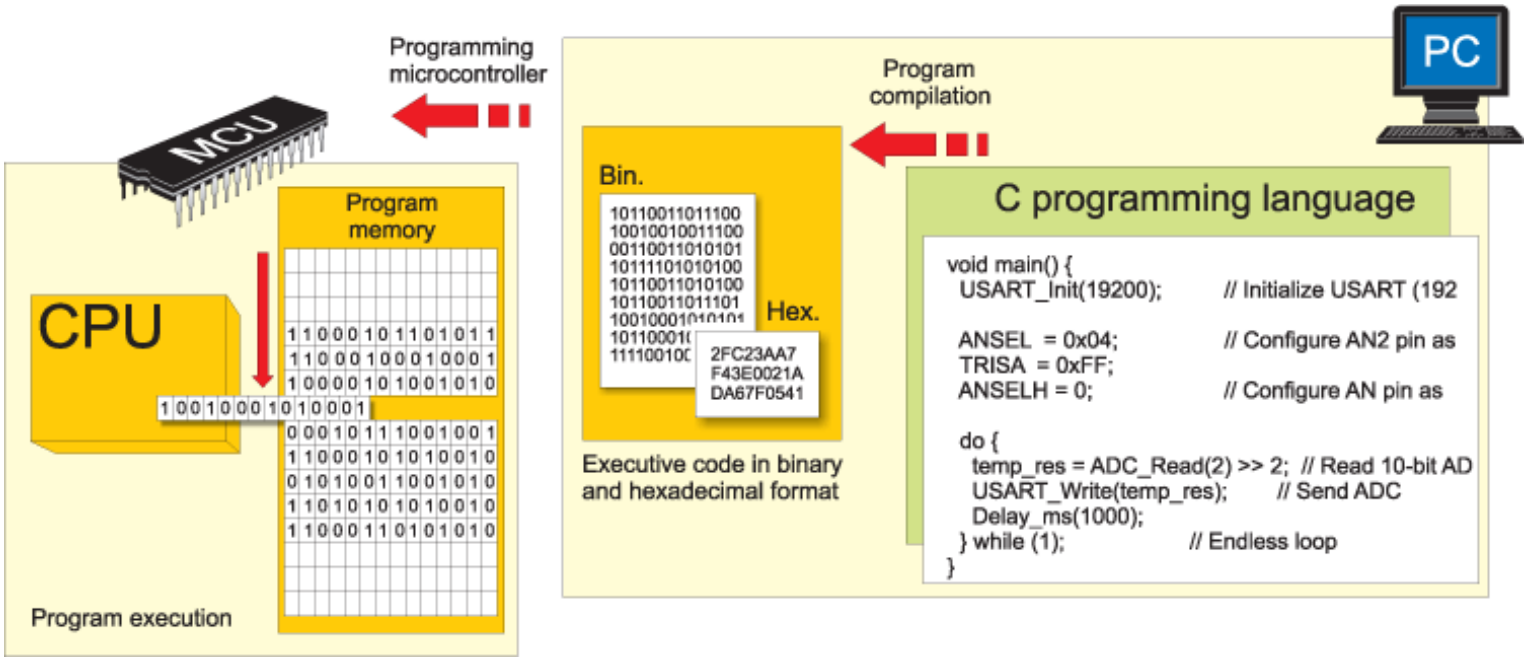

Machine Language: Represent the very early, primitive computer languages that consisted entirely of 1's and 0's - the actual language that the computer understands (machine language).

Assembly Language:
Represent a step up from the first generation languages. Allow for the use of symbolic names instead of just numbers. Code written in an assembly language is converted into machine language .

High Level Language: These languages were designed to make programming far easier, less error-prone and to remove the programmer from having to know the details of the internal structure of a particular computer. These high-level languages were much closer to human language.

Simple program written in C language:

When a C program runs it always executes the main() procedure first.

```c
void main() {

   TRISB = 0;              // All port B pins are configured as
                           // outputs
   PORTB = 0b01010101;     // Logic state on port B pins
}
```

Program written in C

```
; ADDRESS     OPCODE        ASM
; ---------------------------------------------
$0000         $2804         GOTO    _main
$0004         $       _main:
;Test.c,1 :: void main() {
;Test.c,3 :: TRISB = 0;             // All port B pins
$0004         $1303         BCF     STATUS, RP1
$0005         $1683         BSF     STATUS, RP0
$0006         $0186         CLRF    TRISB, 1
;Test.c,4 :: PORTB = 0b01010101; // Logic state
$0007         $3055         MOVLW   85
$0008         $1283         BCF     STATUS, RP0
$0009         $0086         MOVWF   PORTB
;Test.c,5 :: }
$000A         $280A         GOTO    $
```

Compiled Program

```
:100000000428FF3FFF3FFF3F03138316860155304F
:10001000831286000A28FF3FFF3FFF3FFF3FFF3F5D
:04400E00F22FFFFF8F
:00000001FF
```

Executable Code of the program (HEX code)

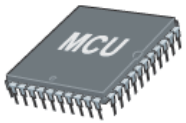

structure of a simple program, pointing out the parts it consists

```
/* Text between these signs is not compiled into exe-
cutable code and represents a comment. */
```

```
// This sign is used for short comments
// within one program line
```

Comments

```
/* Program name:      LED_demo

 * Configuration:
     MCU:            PIC16F887
     Oscillator:     HS, 08.0000 MHz
   Notes: - This example demonstrates change
   of PORTB pins logic state      */
```

Function

```
void main() {

  TRISB = 0;
  PORTB = 0b01010101;
}
```

Comments

```
// All PORTB pins are configured as outputs
// Logic state of port B pins
```

Type of function

Function name

```
void main () {

  Command;
  Command;

}
```

Start of function

No parameters in this function

End of command

End of function

Programming the PIC

```
Void main ()
  {
     ANSEL=0x00; ANSELH=0x00;
     TRISB=0B00000000;
     PORTB=0B10100011;
  }
```

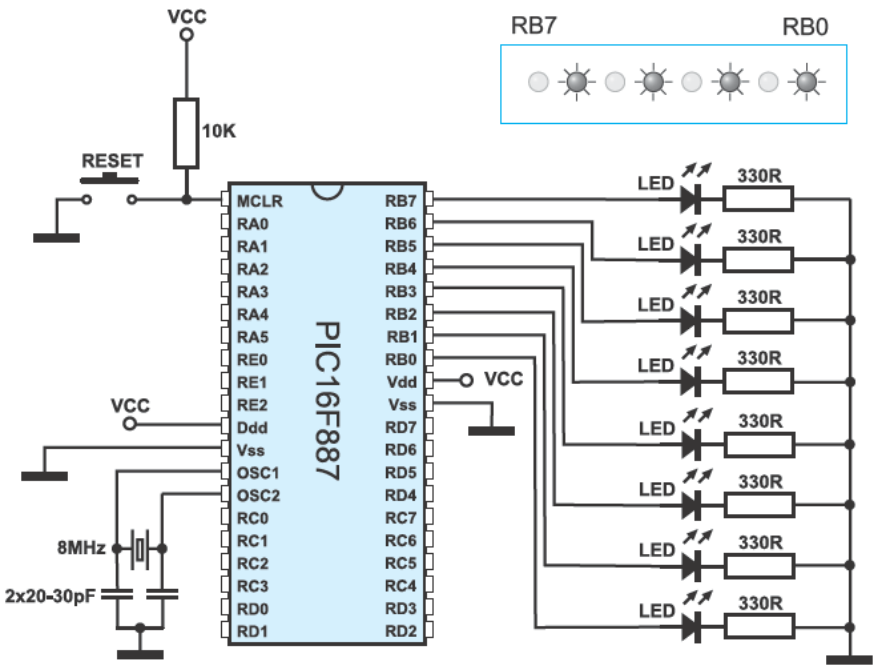

Infinite loops:

Loop:

.....

.....

.....

Goto LOOP;

While(1)

{

.....

.....

}

for(;;)

{

.....

.....

}

Programming the PIC

Loop:

……

……

……

Goto LOOP;

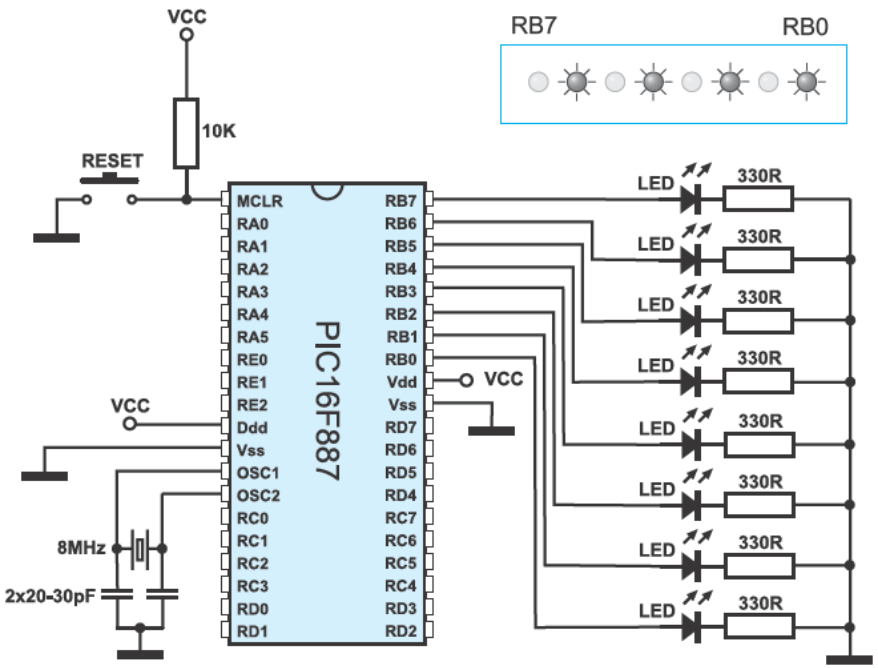


```
Void main ()
  {ANSEL=0x00;  ANSELH=0x00;
   TRISB=0;
     Loop:
        PORTB=0XFF;
        delay_ms(1000);
        PORTB=0;
        delay_ms(1000);
        Goto Loop;
   }
```

```
Void main ()
{ANSEL=0x00;  ANSELH=0x00;
 TRISB=0;  PORTB = 0;
  Loop:
     PORTB=~ PORTB; delay_ms(1000);
   Goto loop;
 }
```

```
Void main ()  {   TRISB=0; Loop:  PORTB=0XFF; delay_ms(1000); PORTB=0; delay_ms(1000); Goto Loop; }
```

Programming the PIC

For Loops

for-loops are ***counter-controlled***, they are normally used whenever the number of iterations is known in advance.

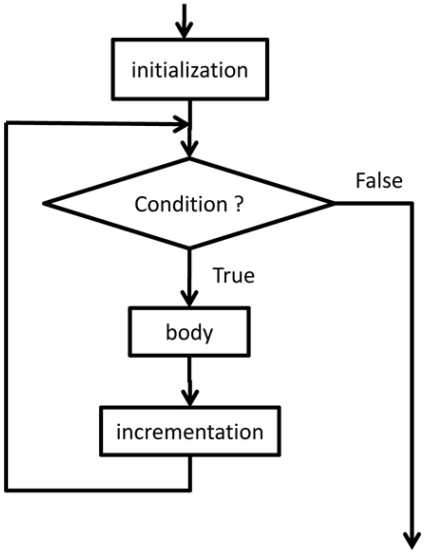

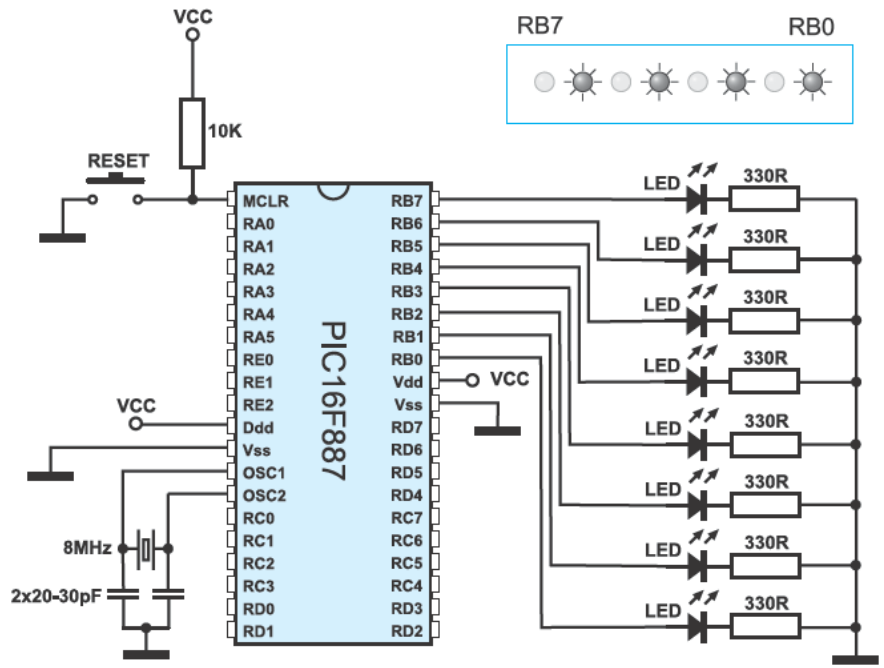


```
void main(){int x; ANSEL=0x00;  ANSELH=0x00;
TRISB=0;
for(x=0;x<18;x++)
{ PORTB=0XFF; delay_ms(1000); PORTB=0; ; delay_ms(1000);
}
```

for (<initial>; <condition>; <increment>)

Programming the PIC

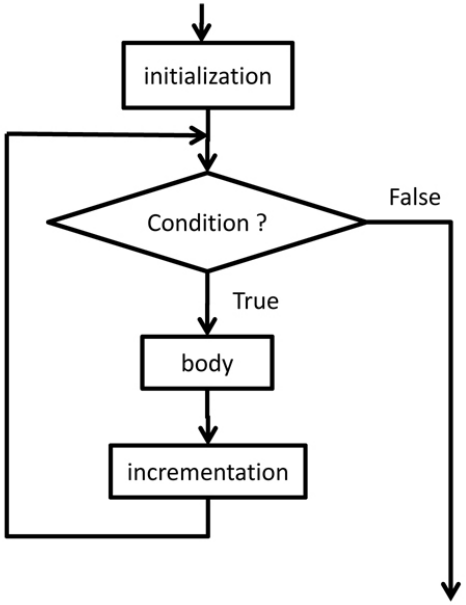

- for (y = 0; y<12; y++) { ……..}
- for (m = 5; m < 10 ; m++ { ……..}
- for (x = 10; m > 0 ; m-- { ……..}
- for (sami = 3; sami < 18 ; sami++ { ……..}

Programming the PIC

Pushbutton Switch Circuit

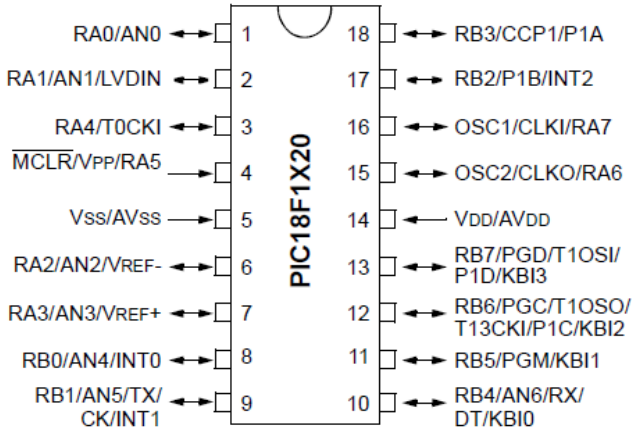

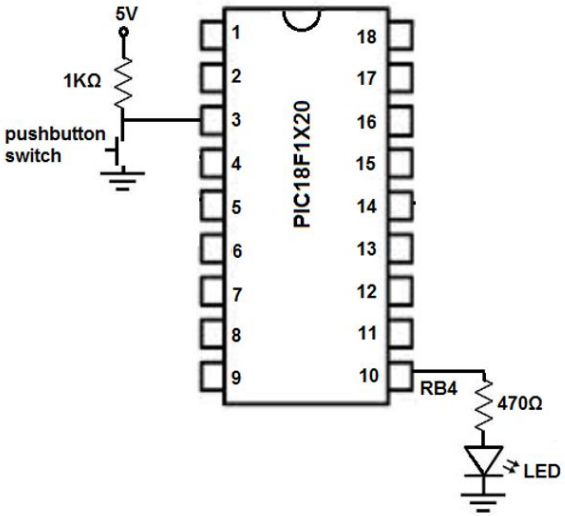


```
Void main ()
  {ANSEL=0x00;  ANSELH=0x00;
   TRISA=0B00011111;
     TRISB=0;
     Loop:
        If(PORTA.F4==0);
           {
             PORTB.F4=1;
           }
         If(PORTA.F4==1);
           {
             PORTB.F4=0;
           }
        Goto Loop;
  }
```

Programming the PIC

Pushbutton Switch Circuit

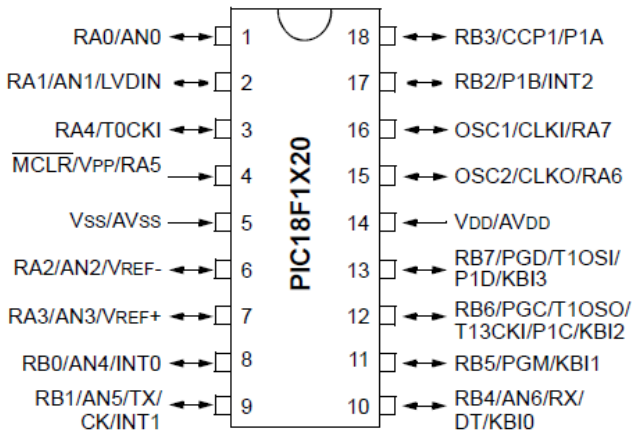

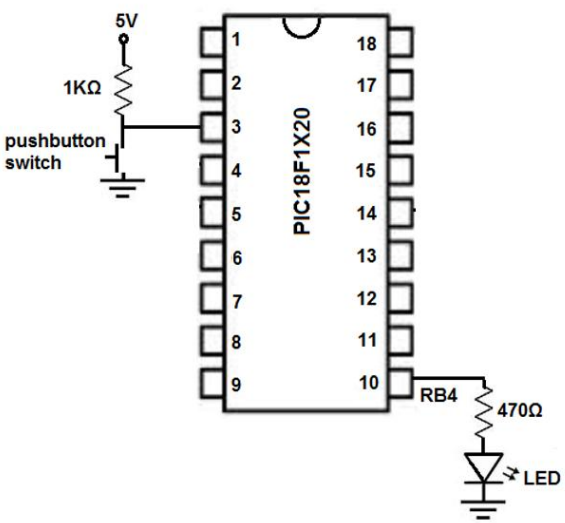


```
Void main ()
  {ANSEL=0x00;  ANSELH=0x00;
   TRISA=0B00011111;
     TRISB=0;
     Loop:
       If (PORTA.F4 == 0)  PORTB.F4=1;
       else PORTB.F4=0
    goto Loop;
  }
```

Programming the PIC

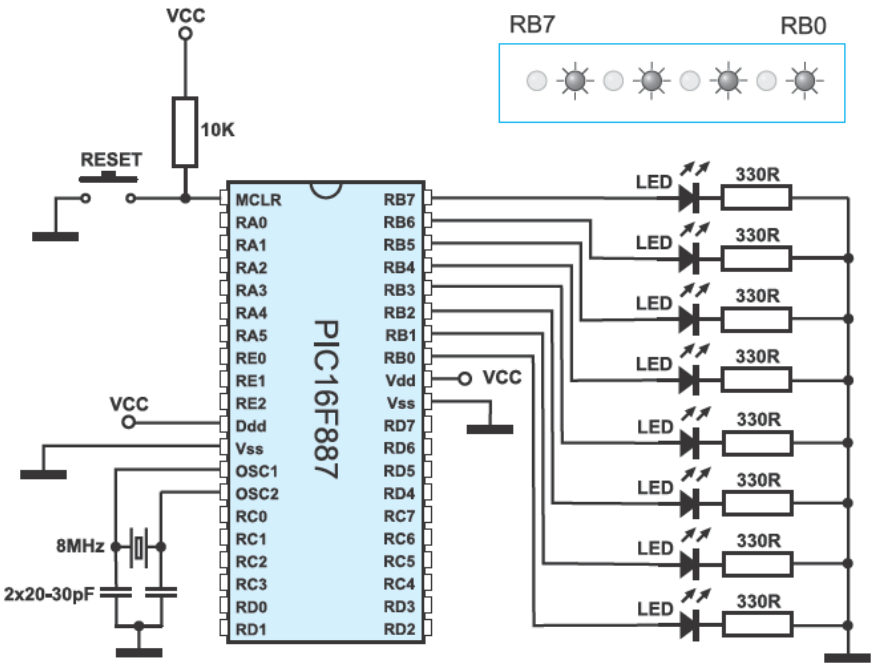


```
Void main ()
  {ANSEL=0x00;  ANSELH=0x00;
   TRISB=0;
     PORTB=0; delay_ms(1000);
     Loop:
        PORTB++
        Delay_ms(1000);
    goto Loop;
   }
```

Example: Suppose, 8 LEDs are connected with PORTB of PIC16F887. Write a program in C to show binary numbers 0 to 255 on LEDs. Use 200ms time delay between two numbers.

```
unsigned char i;
void main()
{
  ANSEL=0x00;
  ANSELH=0x00;
  TRISB=0x00;
  while(1)
  {
    for(i=0;i<=255;i++)
    {
      PORTB=i;
      delay_ms(200);
    }
  }
}
```

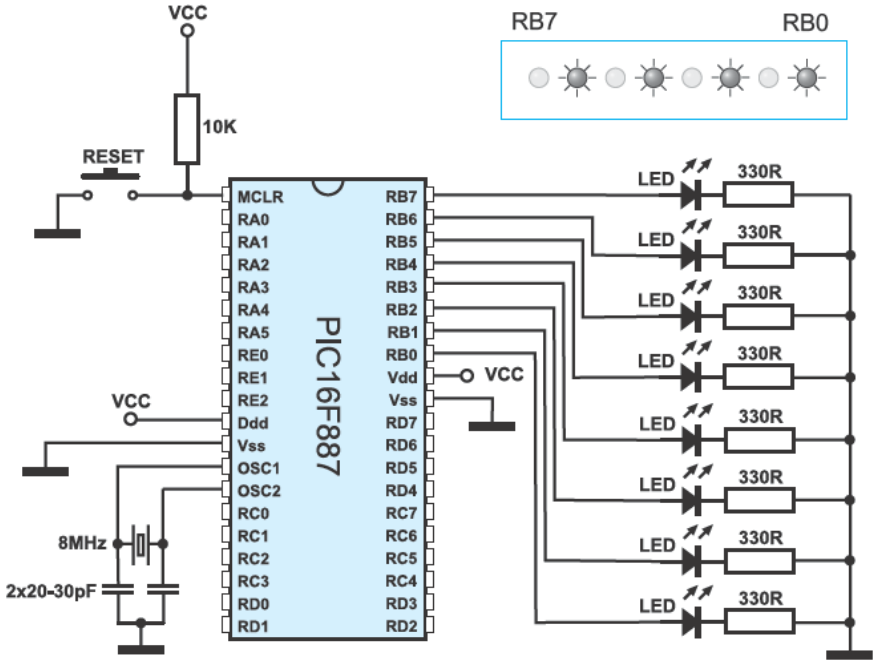

Counter 0 to 9

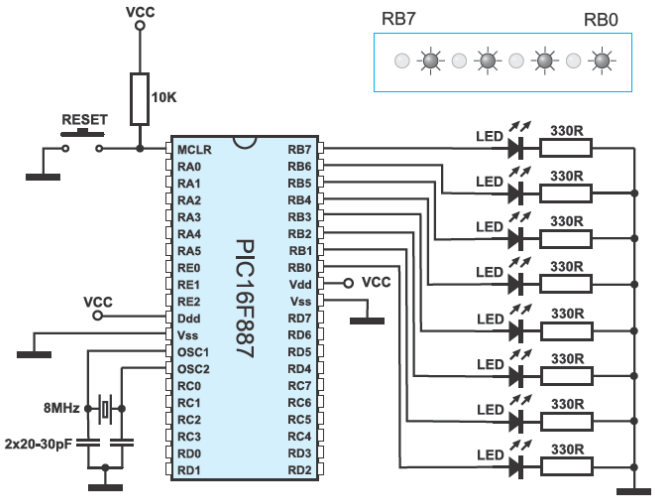

Counter 0 to 9 using IF statement

```
void main()
{   TRISB=0;
    PORTB=0; delay_ms(1000);
while(1){
    PORTB++;
    delay_ms(1000);
    if(portb==9) {portb=0; delay_ms(1000);}
            }
}
```

Counter 0 to 9 Using For statement

```
void main(){
char x;
 TRISB=0; PORTB=0;
 delay_ms(1000);
 while(1){
for(x=0;x<9;x++){ PORTB++; delay_ms(1000);}
portb=0;delay_ms(1000);
            }
}
```

Down counter

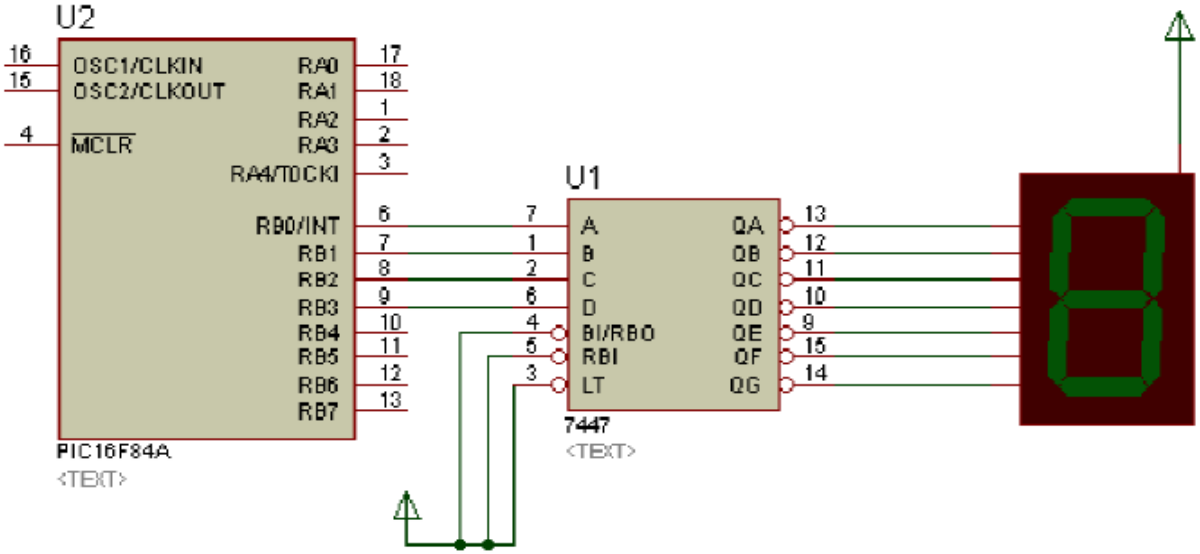


```
void main()
{   TRISB=0;
    PORTB=9; delay_ms(1000);
while(1){
    PORTB--;
    delay_ms(1000);
    if(portb==0) {portb=9; delay_ms(1000);}
            }
}
```

=

```
void main()
{   TRISB=0;
    PORTB=9;
while(1){   delay_ms(1000);
            PORTB--;
            if(portb==0) { delay_ms(1000); portb=9;}
        }
}
```

Even number counter (2 – 8)

Example : Suppose, 7-segment display is connected with PORTB as shown. Write a program in two C programs to show

a. The even binary numbers from 2 to 8 on the display (up counting).
b. The even binary numbers from 8 to 2 on the display (down counting).

Use 1000ms time delay between two numbers

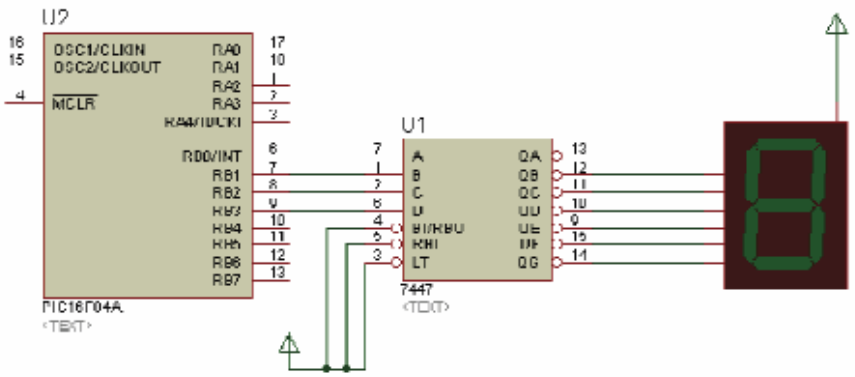

Even number up counter (2 – 8)

```
void main()
{ TRISB=0;portb=2;
while(1){
        delay_ms(1000);
        portb++;
        portb++;
if (portb==8){ delay_ms(1000);portb=2;}
        }
}
```

portb=portb+2;

Even number down counter (8 – 2)

```
void main()
{ TRISB=0;portb=8;
while(1){
        delay_ms(1000);
        portb=portb-2;
        if (portb==2){ delay_ms(1000);portb=8;}
        }
}
```

Up/Down Binary counter , depends on the input switches

depends on the input switches

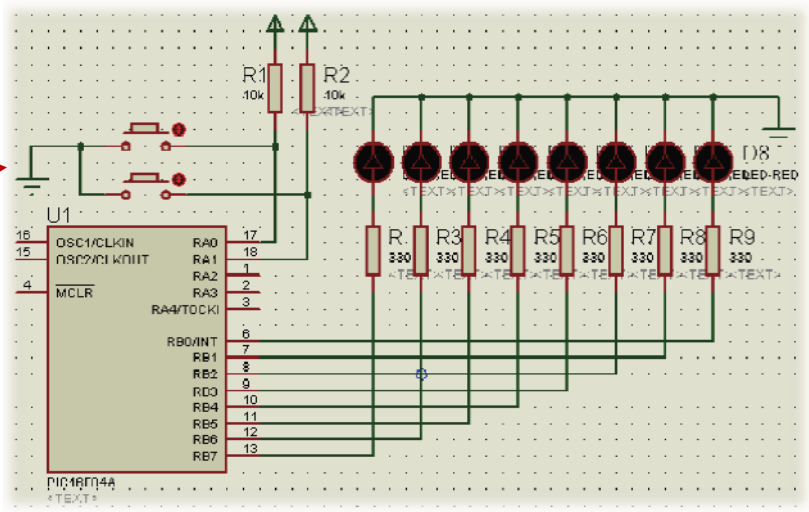


```
void main()

{

 TRISB=0; TRISA=0XFF;

 PORTB=0;

while(1){

            if(porta.f0==0) { portb++; delay_ms(500);}

            if(porta.f1==0){portb--; delay_ms(500);}

        }
}
```

(0-9 Up/Down) counter , depends on the input switches

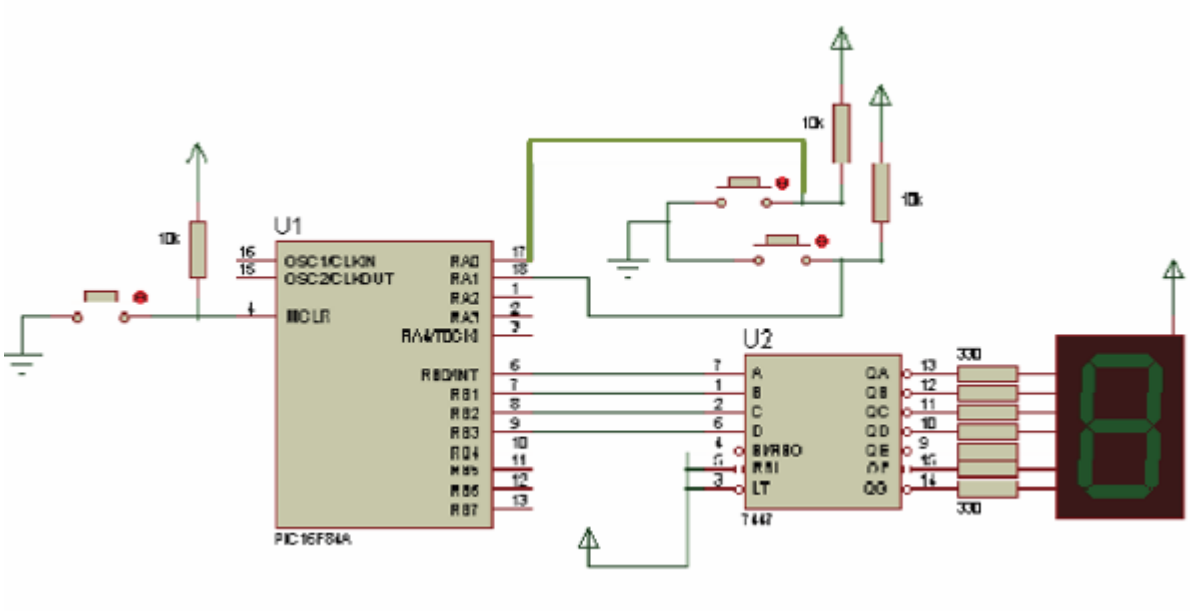


```
void main()
{
 TRISB=0; TRISA=0XFF;
 PORTB=0;
while(1){
            if(porta.f0==0) { portb++; delay_ms(500);}
            if(porta.f1==0){portb--; delay_ms(500);}
        }
}
```

Example : Suppose, Initial value of PORTB is A7H. Write a program in C to shift the values in left direction until all bits of PORTB becomes clear. Hold the value of PORTB for 1sec after a shift. Repeat the sequence.

```
void main()
{
  ANSEL=0x00;
  ANSELH=0x00;
  TRISB=0x00;
  PORTB=0xA7;
  while(1)
  {
    delay_ms(1000);
    PORTB<<=1;
    if(PORTB==0)
    PORTB=0xA7;
  }
}
```

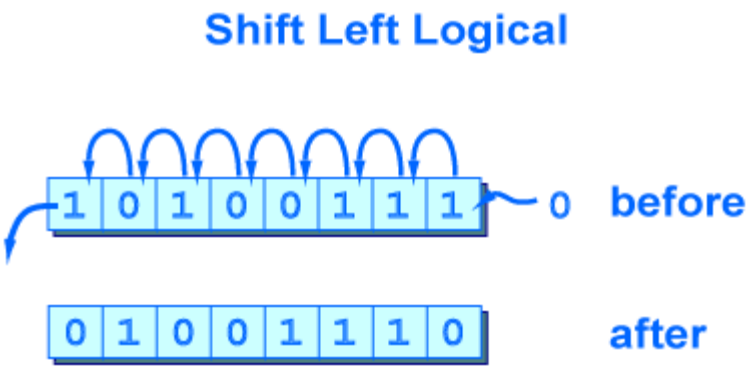

Example : Suppose, Initial value of PORTB is F1H. Write a program in C to rotate the value in right direction. Use 200ms time delay between two shifts.
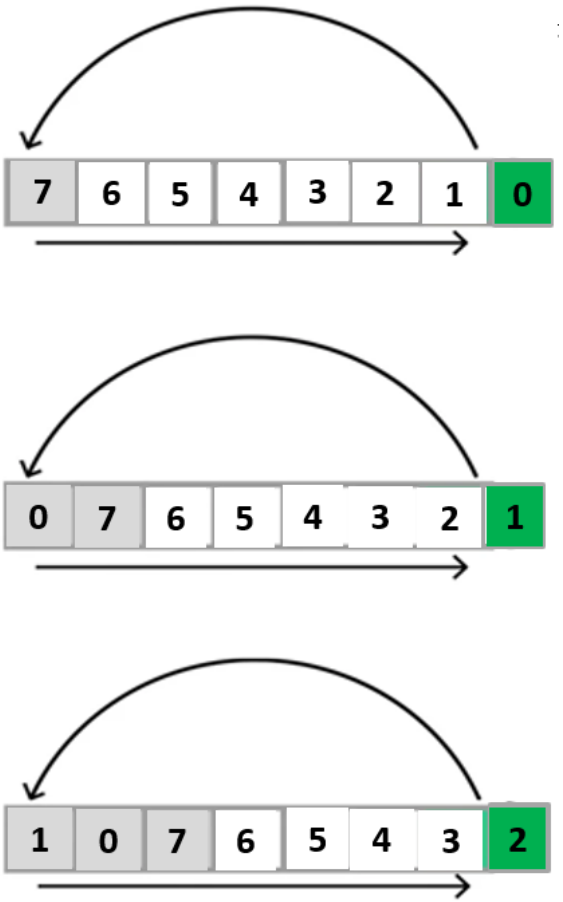
```
bit a;
void main()
{
   ANSEL=0x00; ANSELH=0x00;
   TRISB=0x00;
   PORTB=0xF1;
   while(1)
   {
      a=PORTB.F0;
     delay_ms(200);
     PORTB>>=1;
      PORTB.F7=a;
   }
}
```