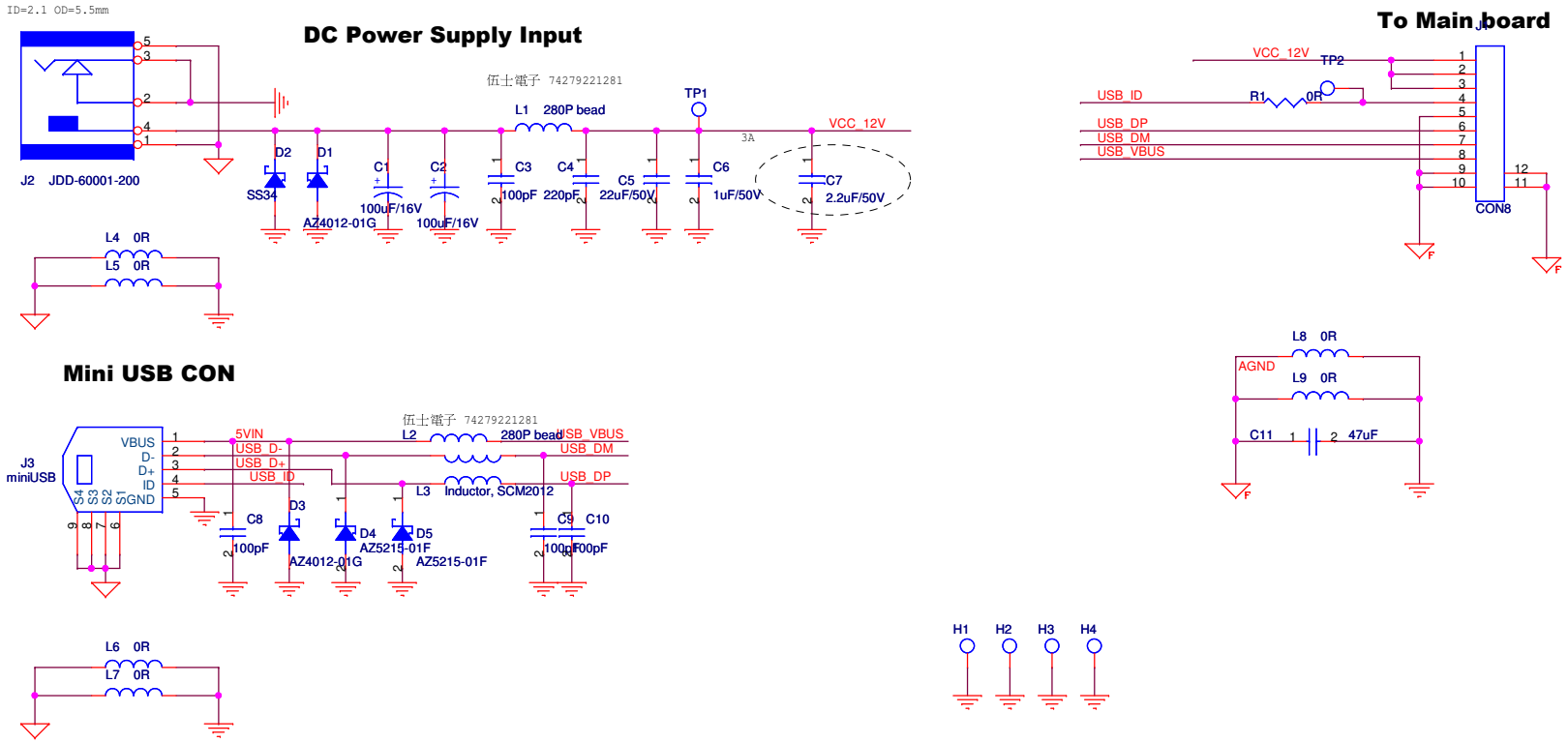

MIIS

Title: DAB100 Power Adapter Board

Size	Document Number	Rev
B	DAB100 Power Adapter Board_A0.DSN	A0

Date: Wednesday, January 02, 2019 Sheet 1 of 1