ROBOTICS
01PEEQW

Basilio Bona

DAUIN – Politecnico di Torino

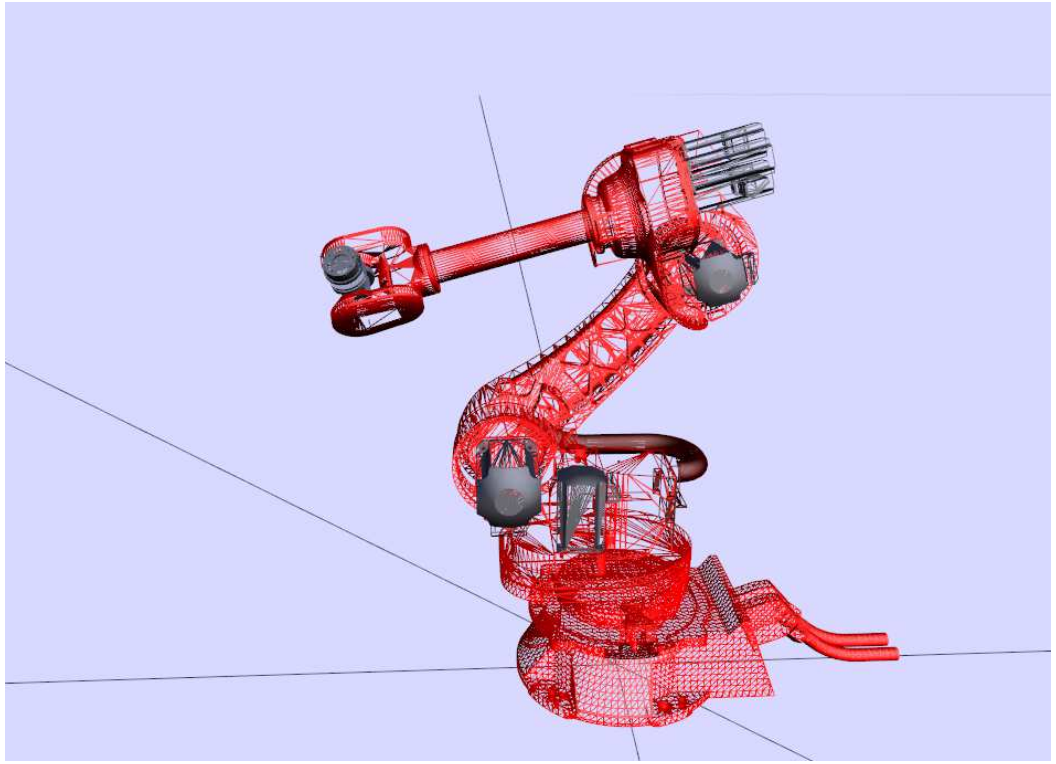

Kinematic chains

Readings & prerequisites

From the MSMS course one shall already be familiar with

- Reference systems and transformations
- Vectors
- Matrices
- Rotations, translations, roto-translations
- Homogeneous matrices

These concepts are basic for building the mathematical models of a robot, i.e., **kinematic** and **dynamic functions**

Kinematic chains

- **Kinematics** allows to represent positions, velocities and accelerations of specified points in a multi-body structure, independently from the causes that may have generated the motion (i.e., forces and torques)

- To describe the kinematics of manipulators or mobile robots, it is necessary to define the concept of **kinematic chains**

- A ***kinematic chain*** is a series of ideal arms/links connected by ideal joints

Kinematic chains

- A kinematic chain KC is composed by a variable number of
  - Arms/links (rigid and ideal), connected by …
  - Joints (rigid and ideal)
- KC is defined only as a geometric entity (no mass, friction, elasticity, etc. are considered)
- A reference frame (RF) is placed on each arm/link
- DH conventions are used (see later for definition)
- Every possible point of the arm/link may be represented in this RF
- This means **link ↔ one RF** and **KC ↔ many RFs**

Kinematic chains

- Links/arms are idealized geometrical bars connecting two or more joints
- Joints are idealized physical components allowing a relative motion between the attached links
- Joints allow a single "degree of motion" (DOM) between the connected links
- Joints may be of two types (in the present context)
  - *Revolute* (or rotational) joints; they allow a rotation between the connected links
  - *Prismatic* (or translation) joints; they allow a translation between the connected links
  - Other types are possible, but will not be considered

Joints: example

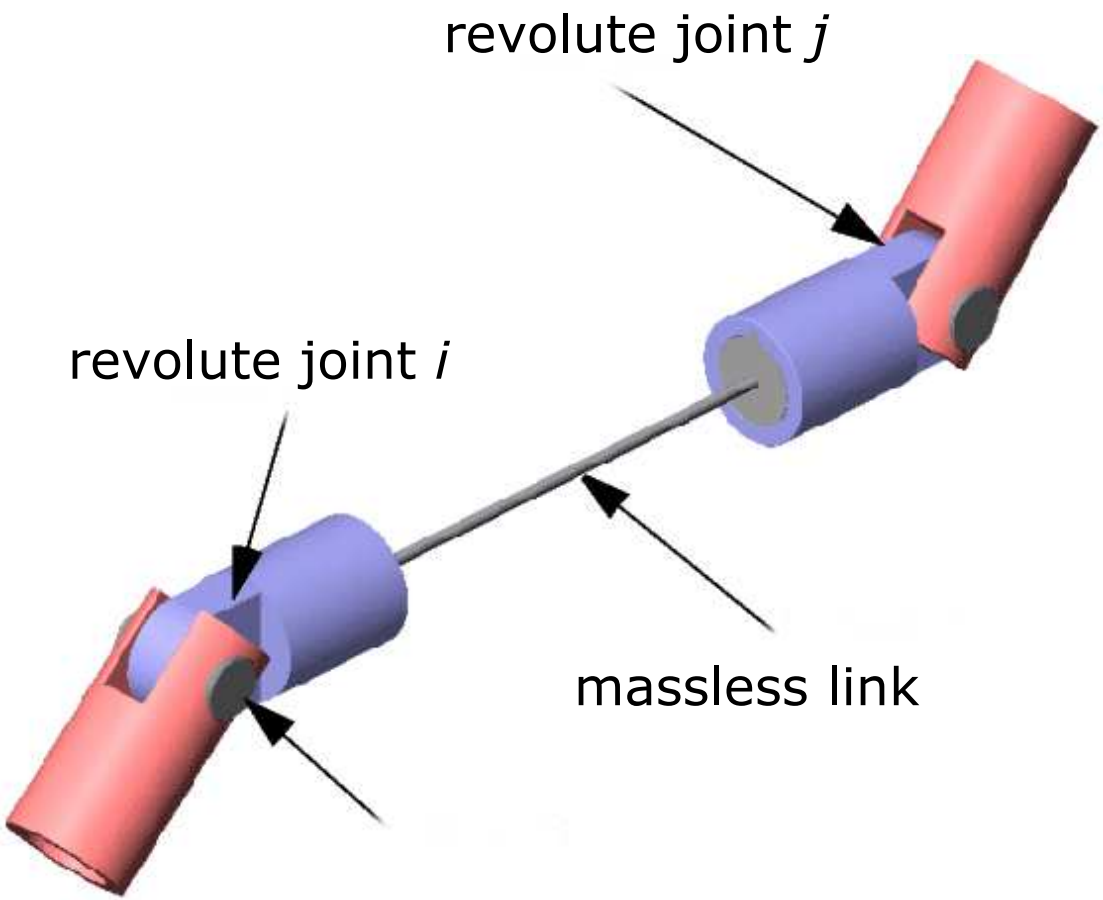

The robot joints are moved by actuators
(electric, hydraulic, pneumatic, piezo, etc.)

When a joint is not actuated, it is called a **passive joint**

Joints: other Examples

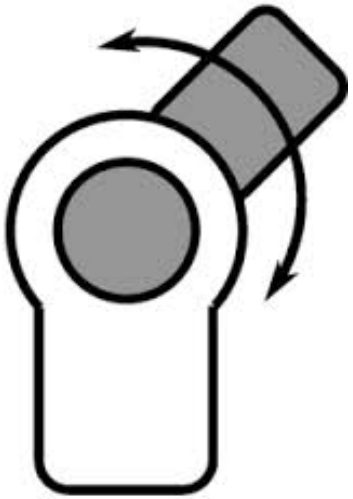

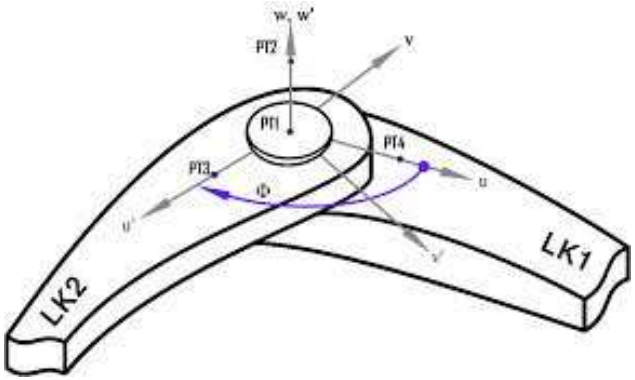

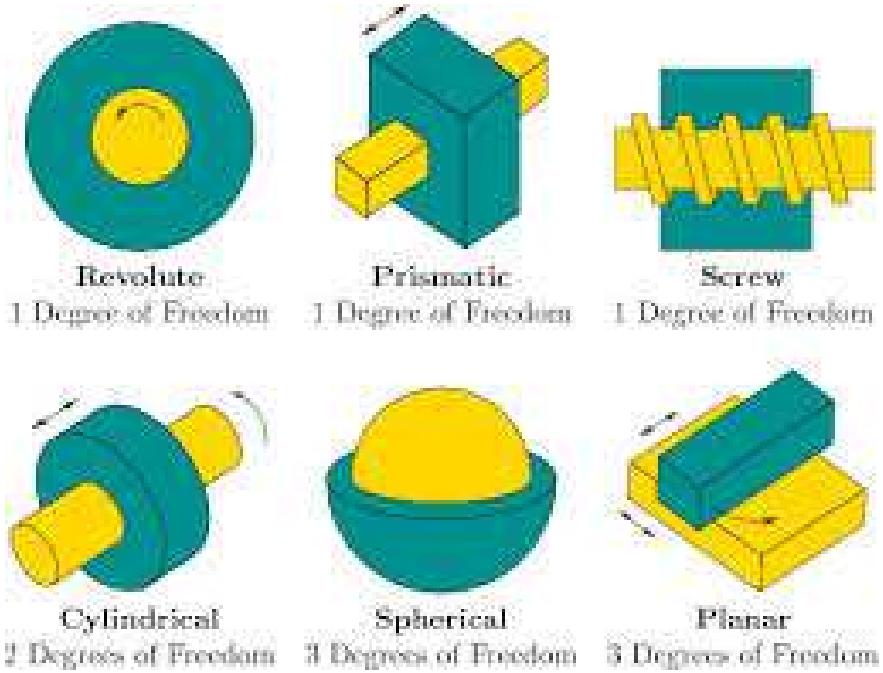

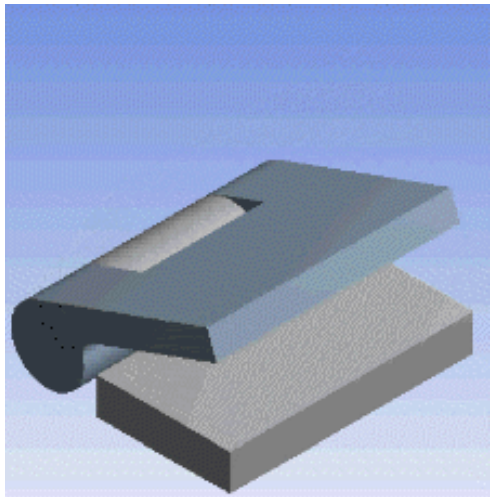

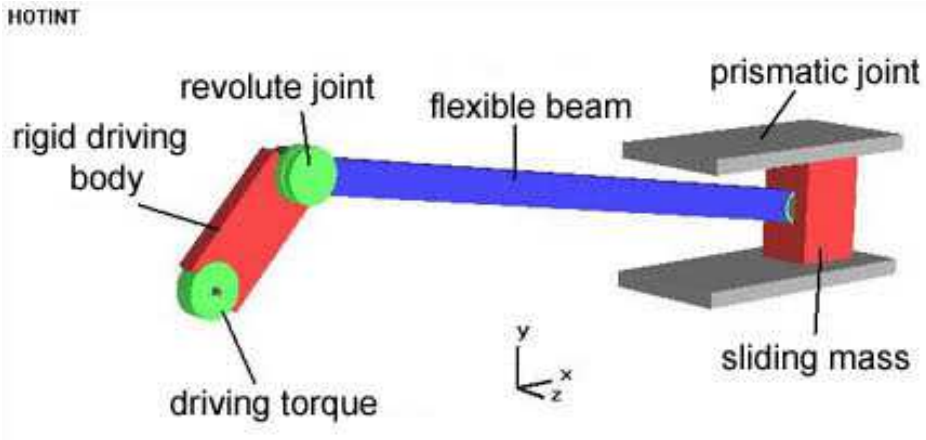

Joint types

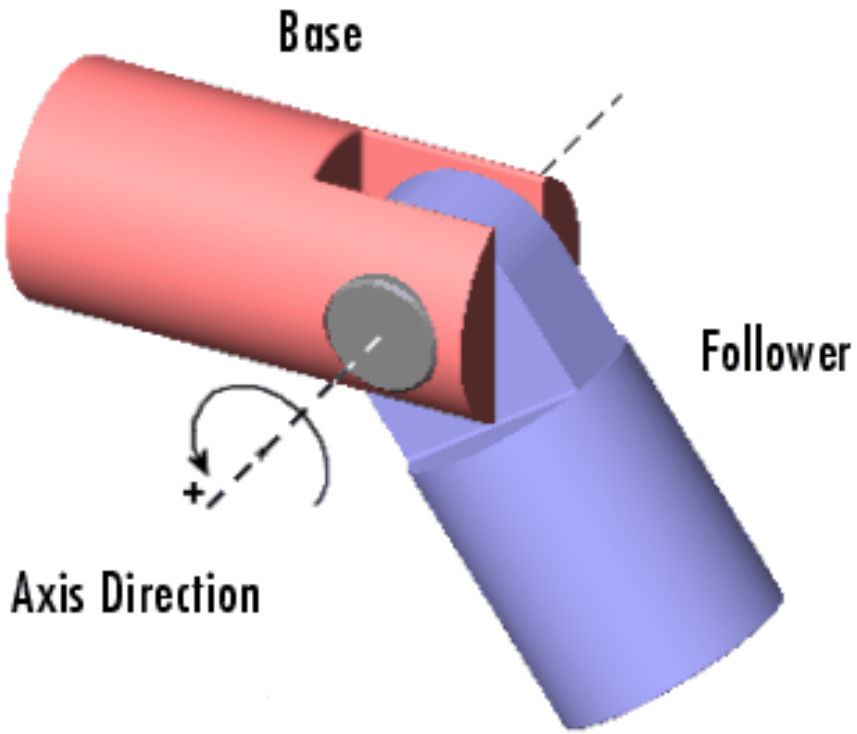

Revolute

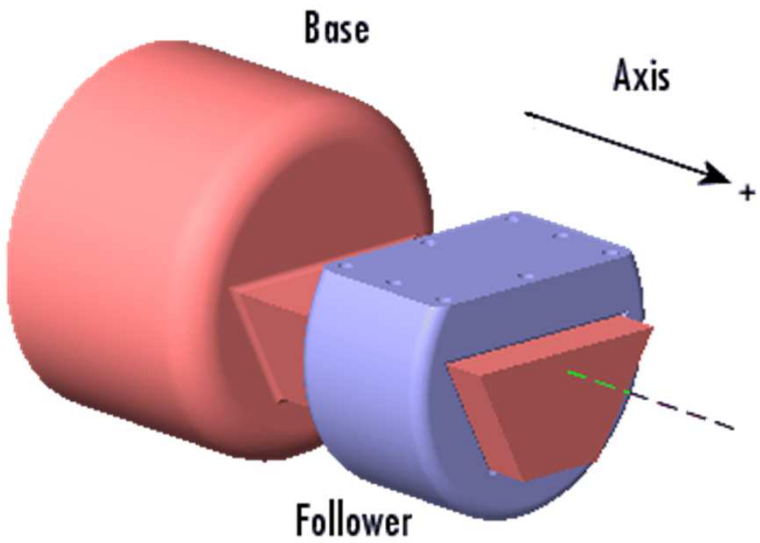

Prismatic

KC types

- ***Open chains***: when there is only one link between any two joints. The KC has the tree-like structure

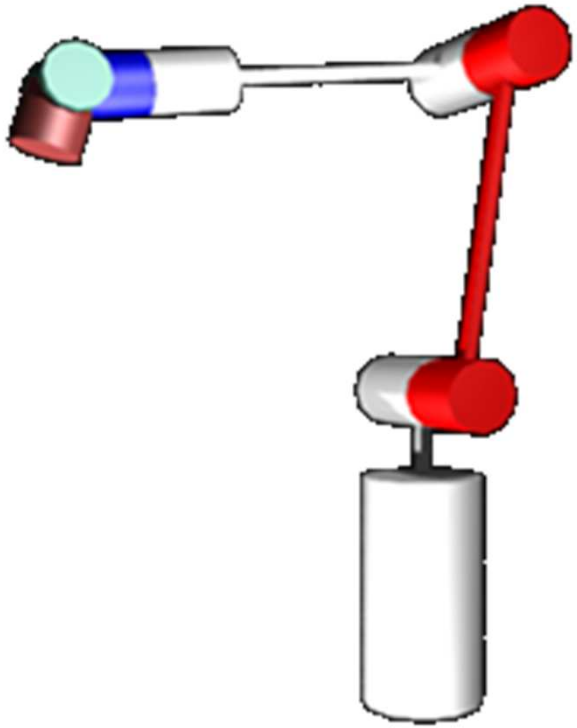

- ***Closed chains***: when there are more than one link between two joints. The KC has the cycle-like structure

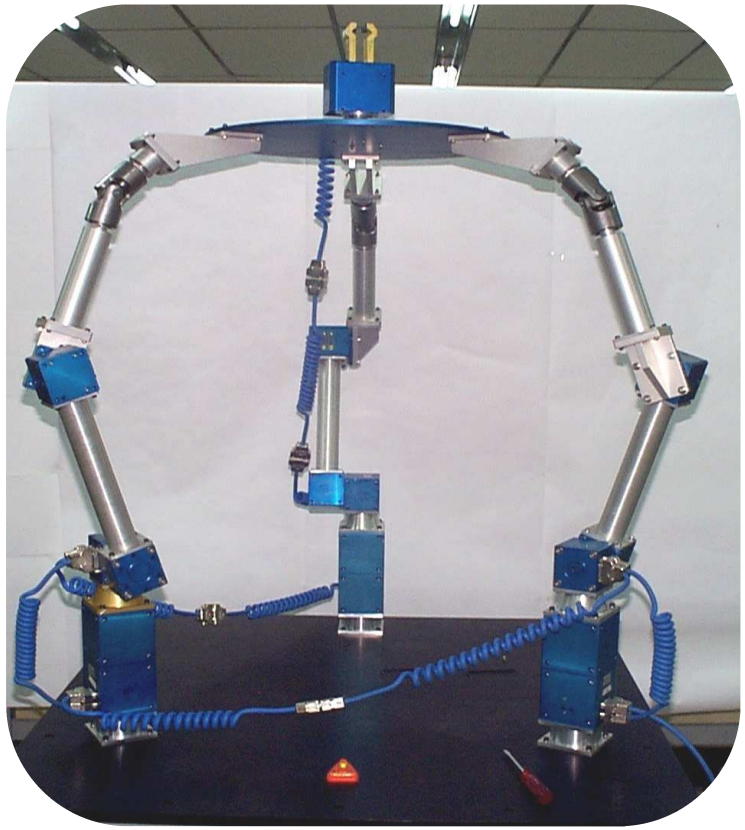

Example: revolute joints, open chain

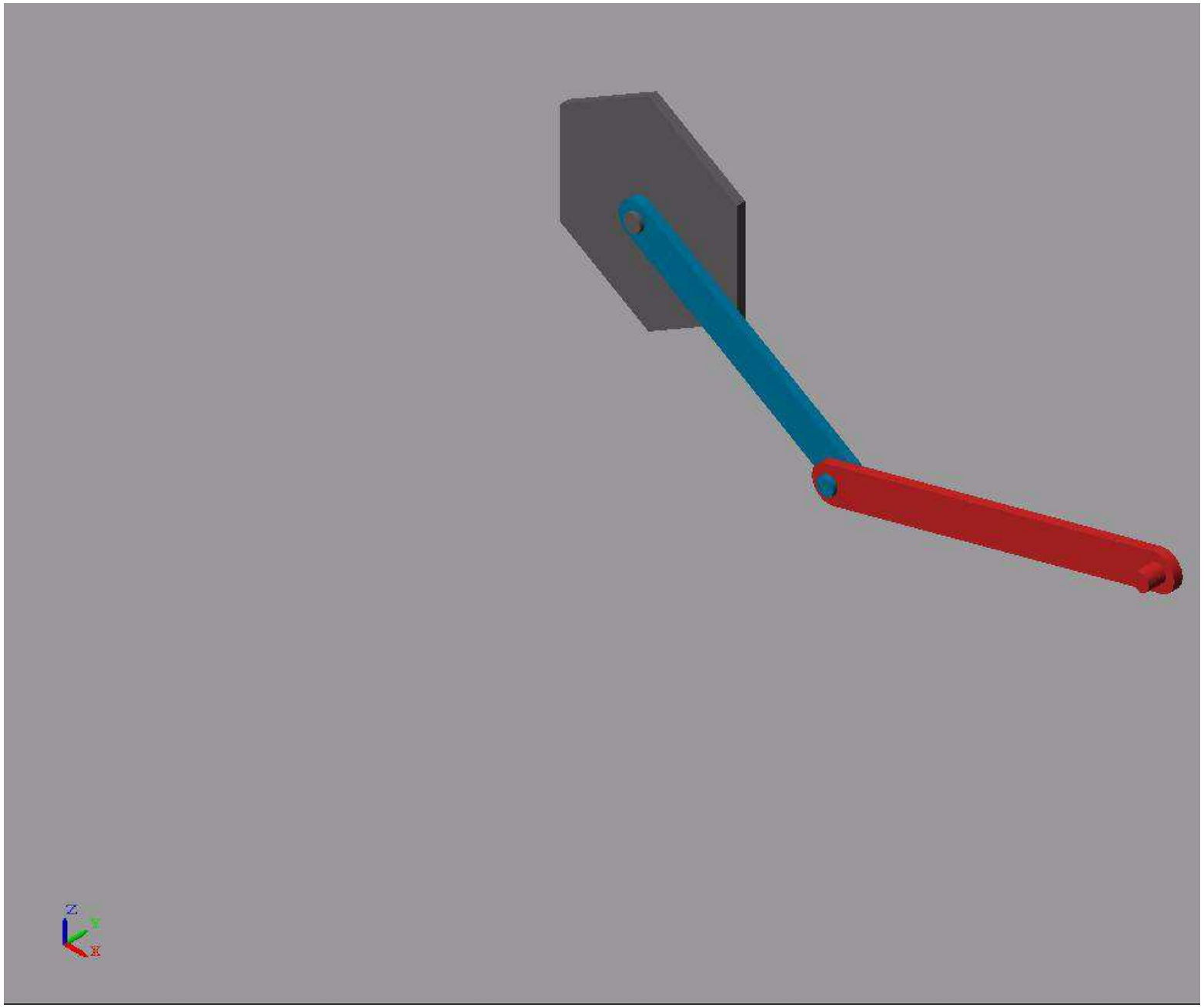

Example: revolute joints, closed chain

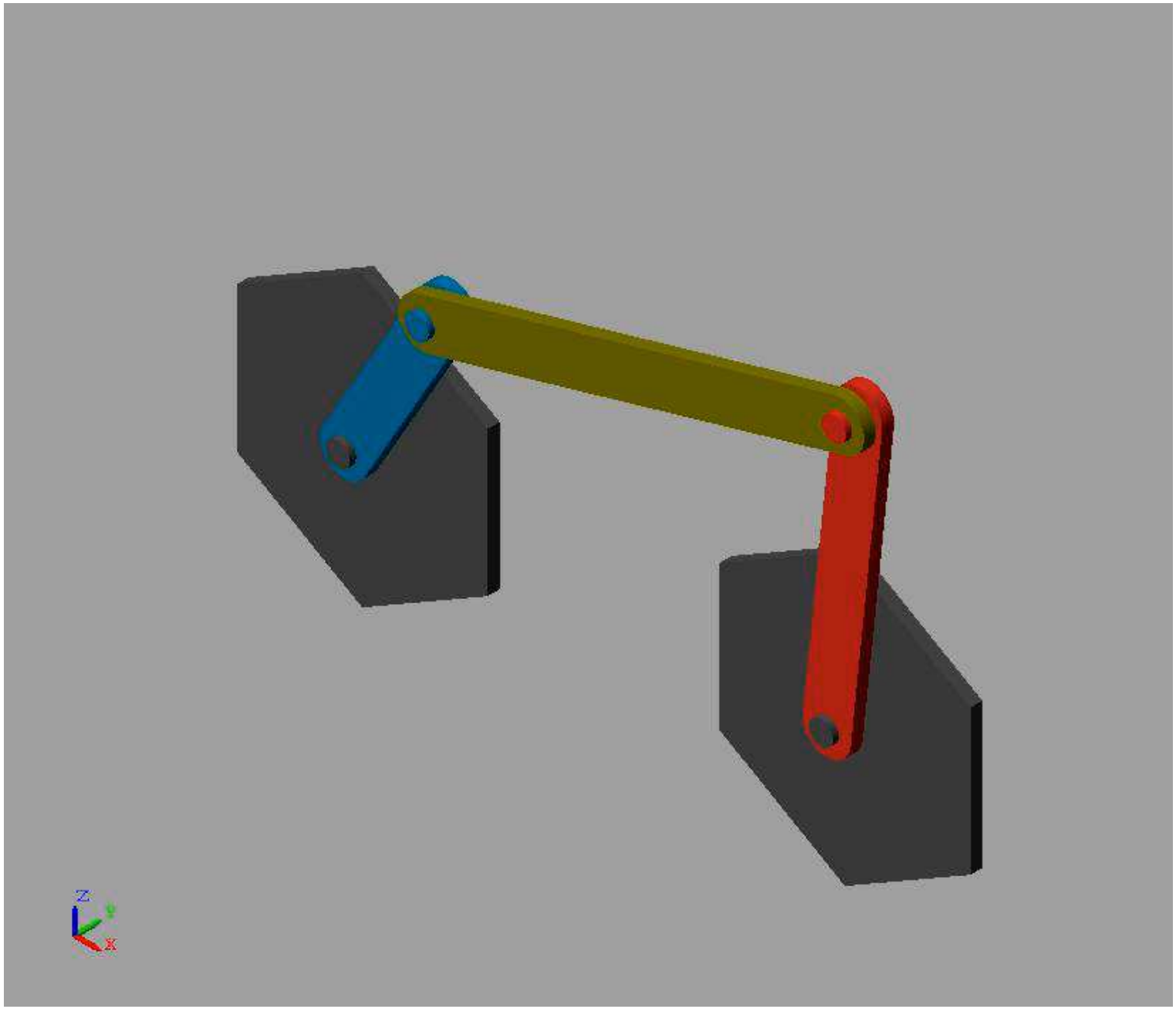

Example: complex structure, closed chain

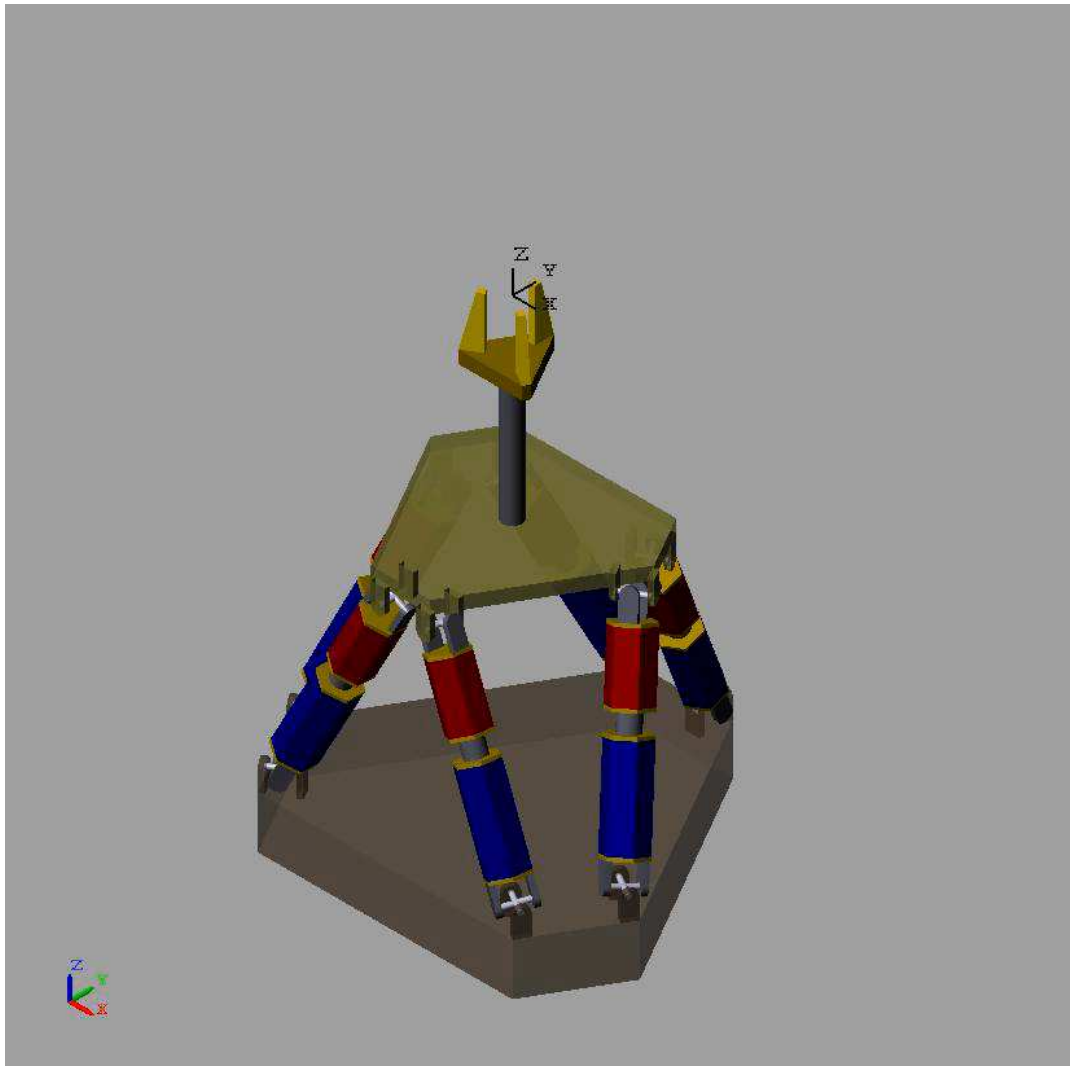

Graphical representation

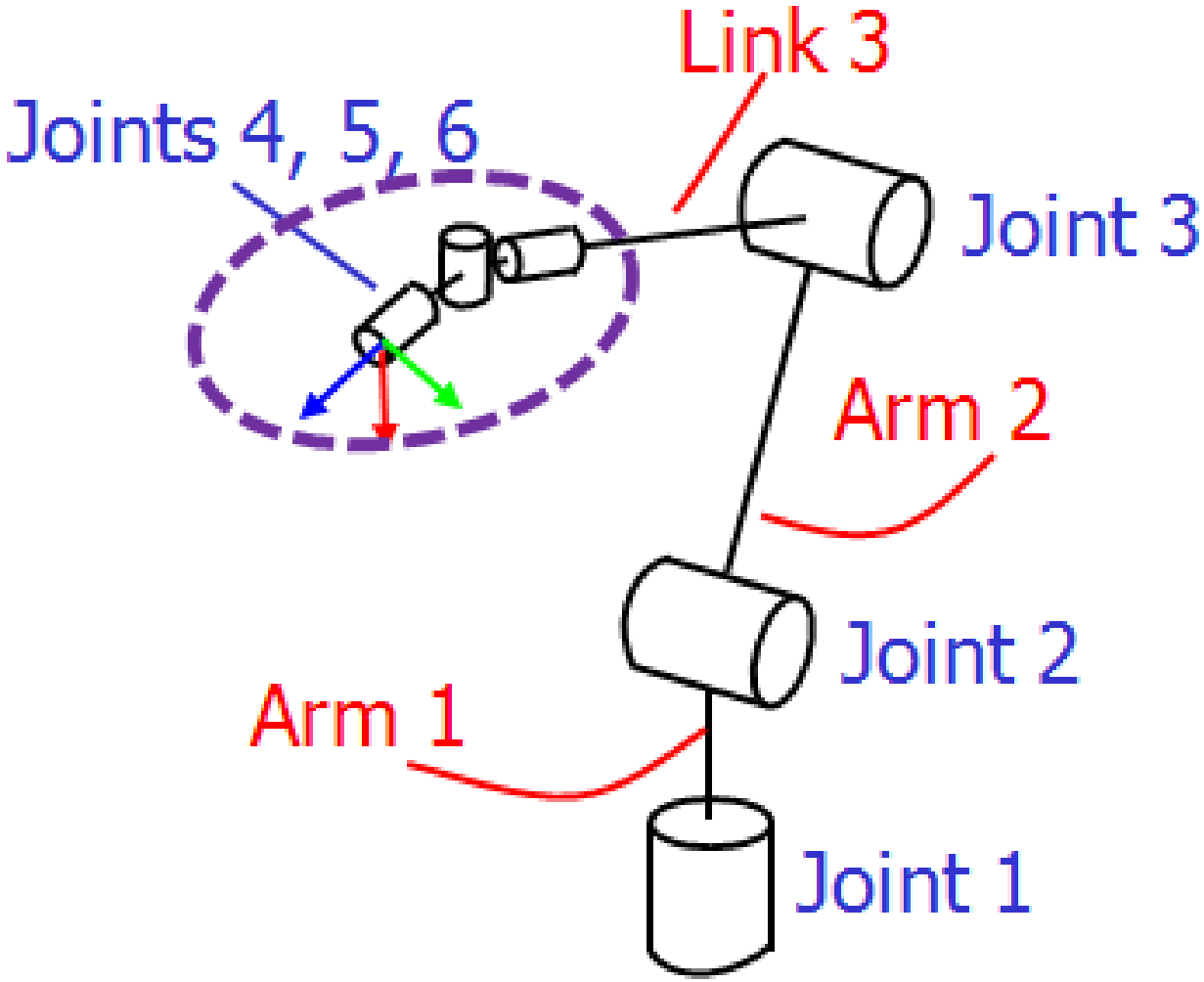

Rotation joints

Rotation joints are drawn in 3D as small cylinders with axes aligned along each rotation axis

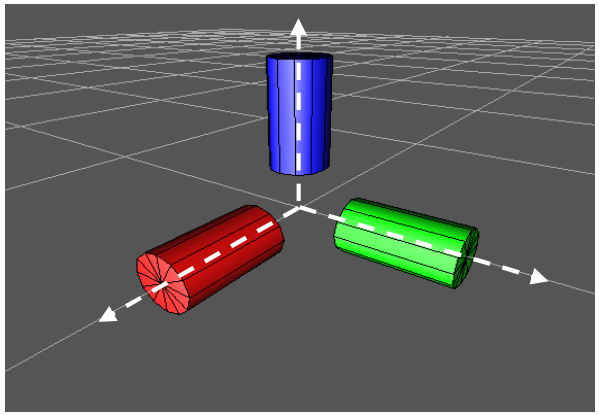

Red Green Blue
for the three axis

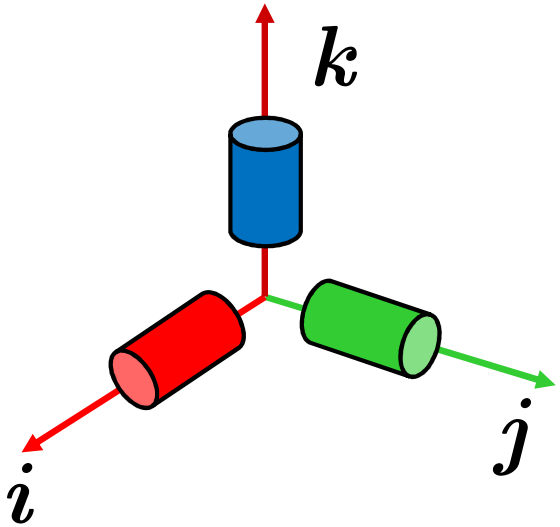

in 2D **rotation joints** are drawn as small circles or small hourglasses

axis is normal to the plane
pointing toward the observer

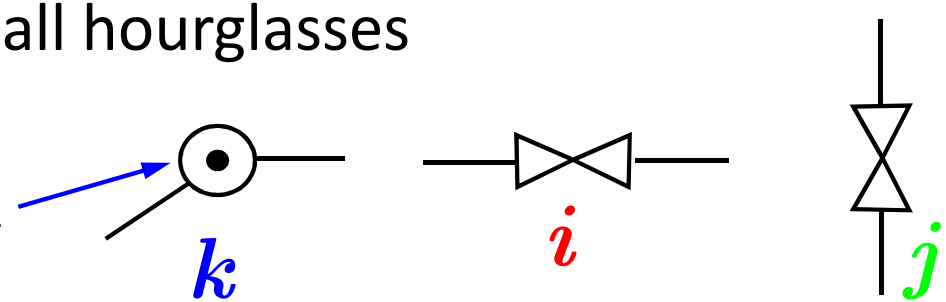

Prismatic joints

Prismatic joints are drawn in 3D as small boxes with each axis aligned along the translation axis

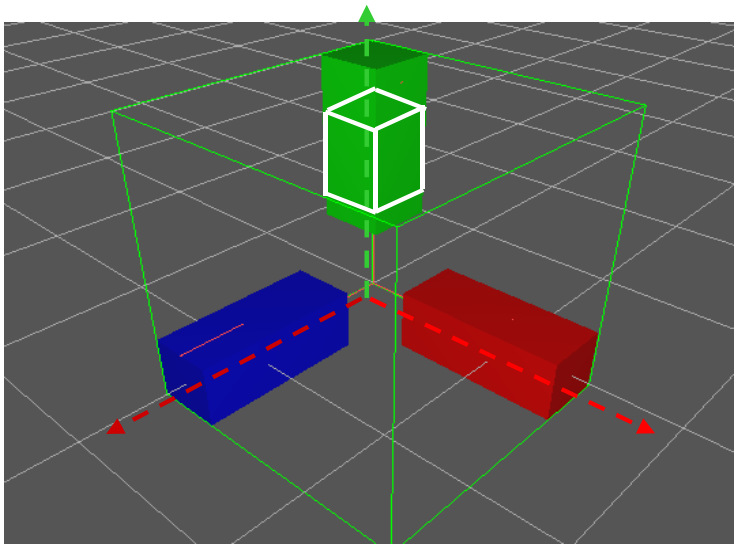

in 2D **prismatic joints** are drawn as small squares with a point in their centers or as small rectangles with a line showing the two successive links

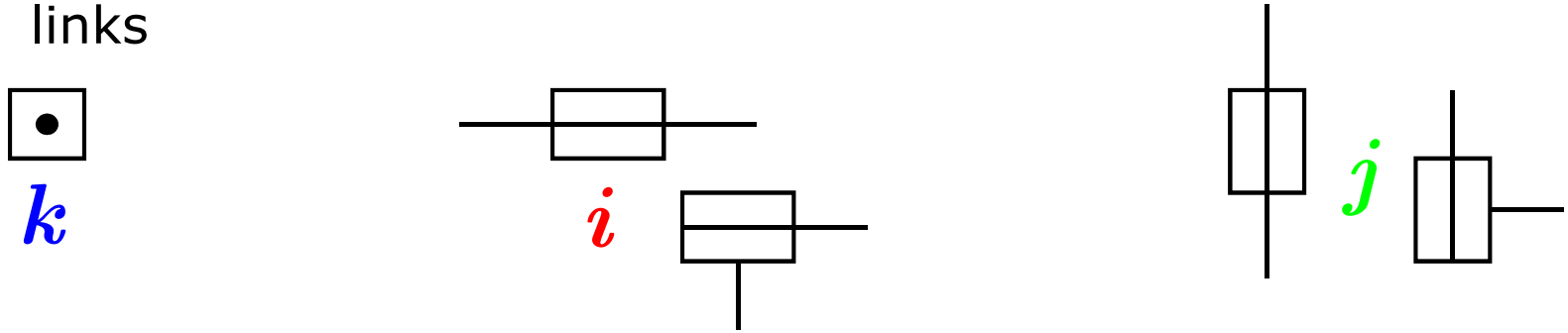

Graphical representation: example

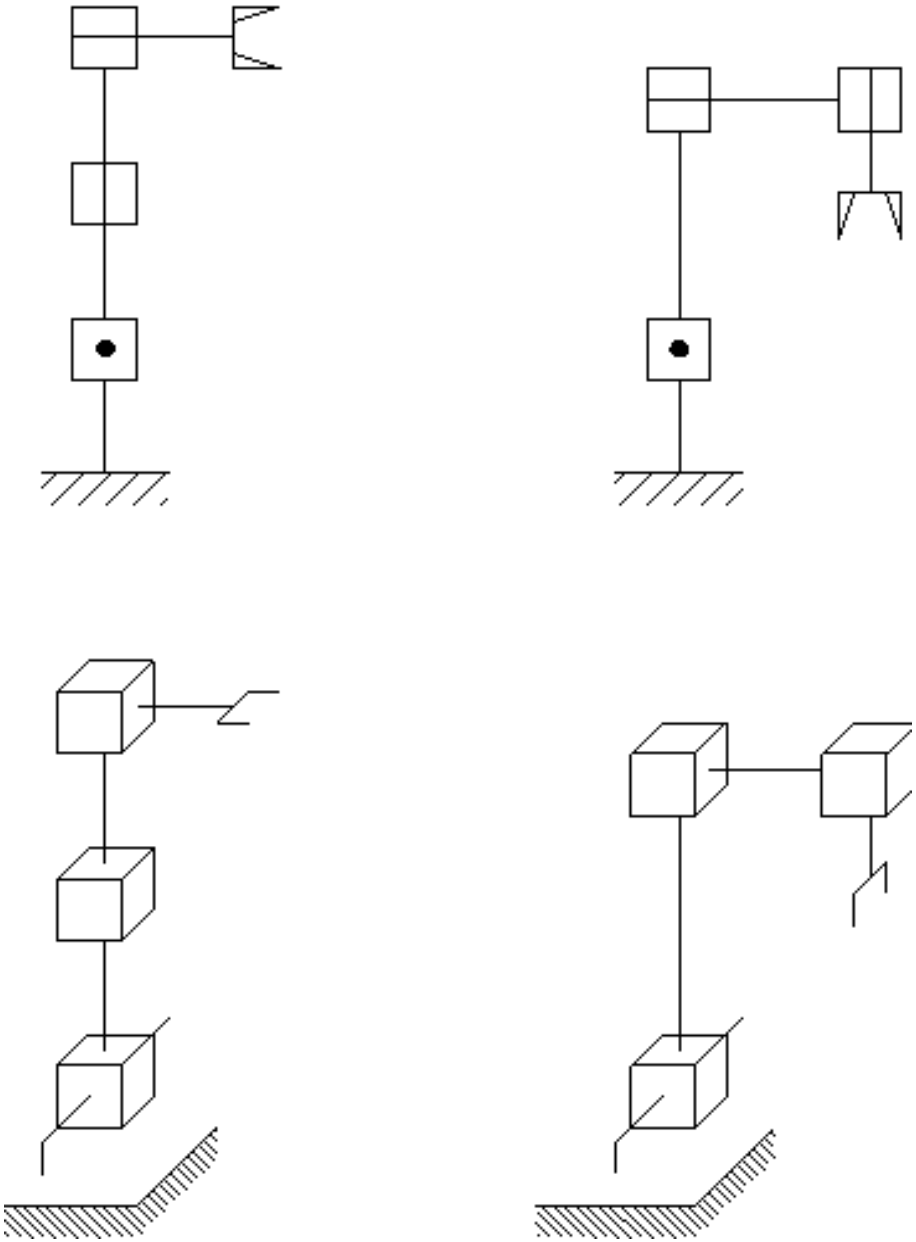

Example: 1 prismatic + 2 revolute joints, open chain

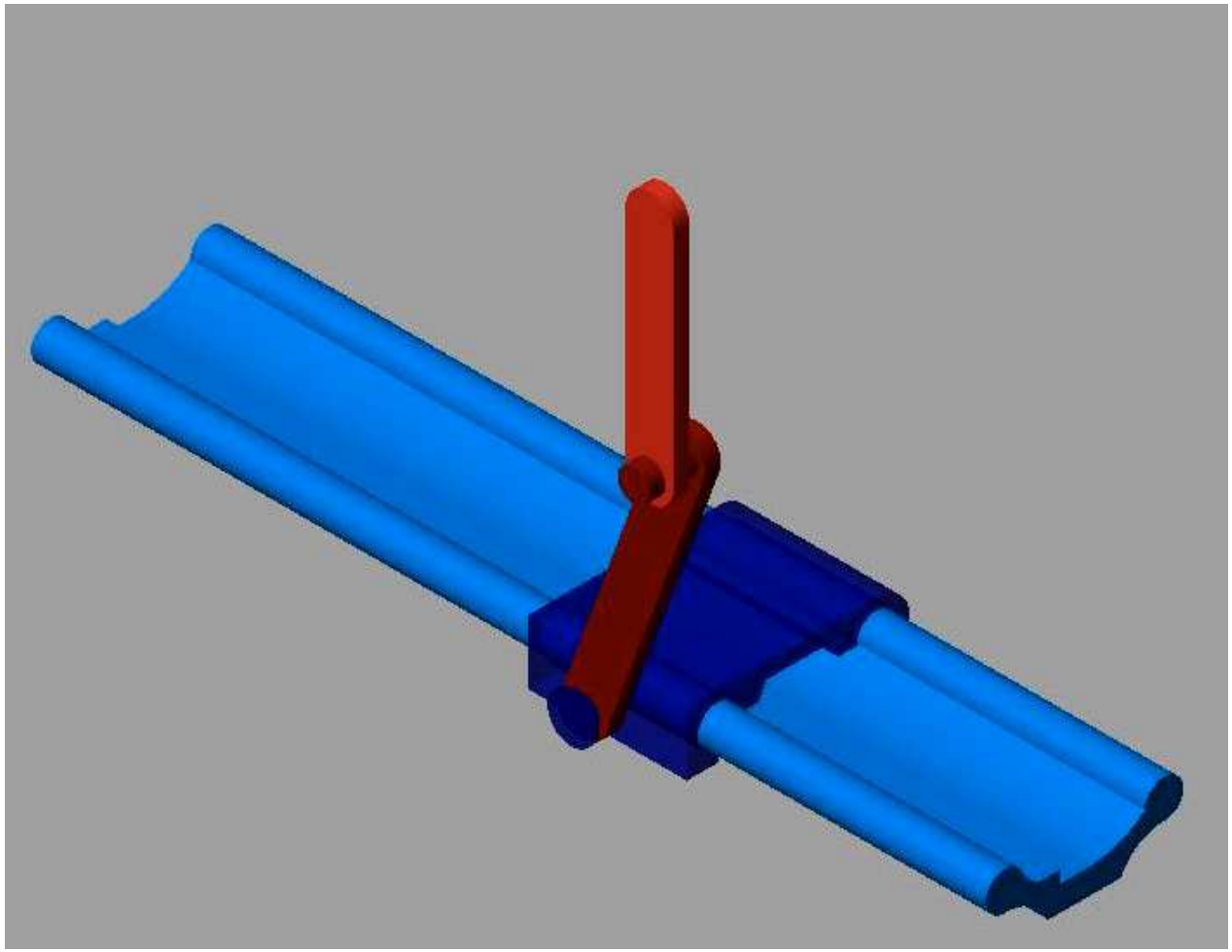

Example: a 3D printer - 3 prismatic

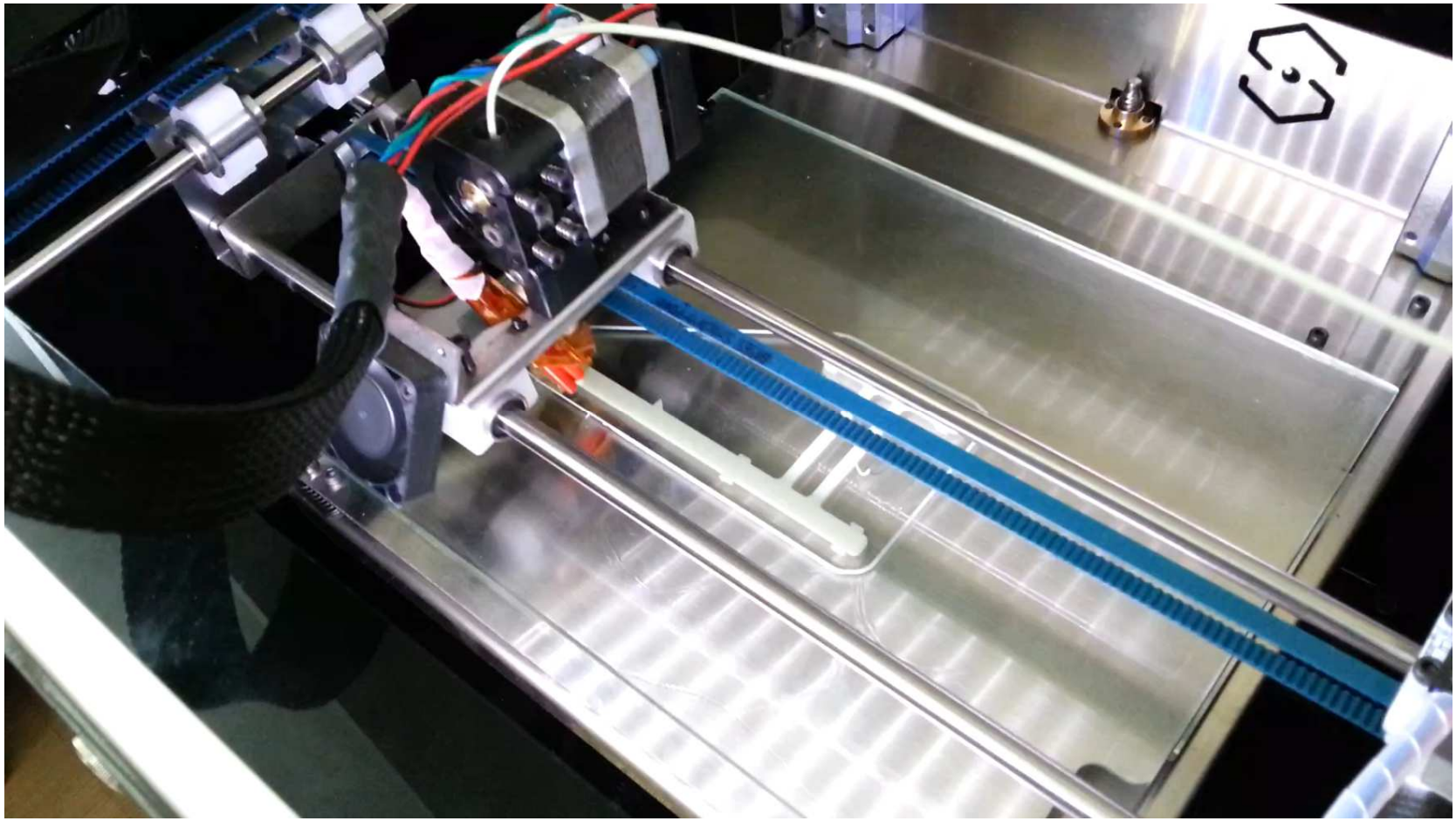

End effectors

End effector – gripper – hand – end tool are synonymous

- It identifies the structure at the end of the last link that is able to perform the required task or can hold a tool

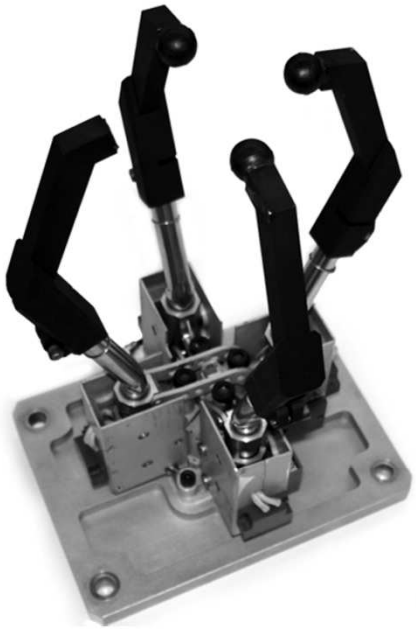

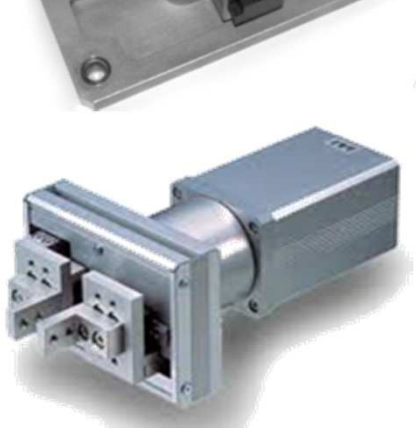

Tool center point – TCP

The **TCP** (Tool Center Point) is the ideal point on the end effector that the robot software moves through space

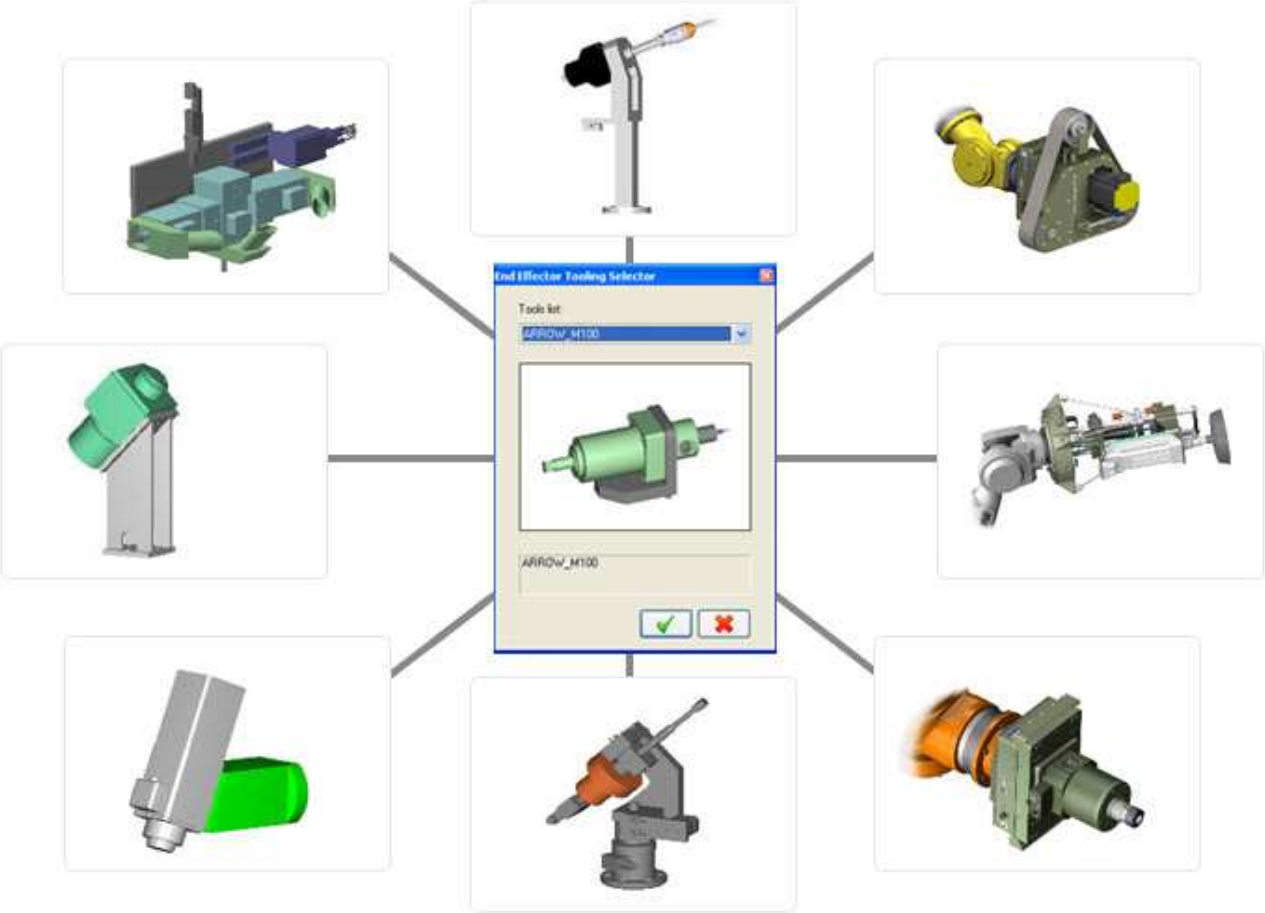

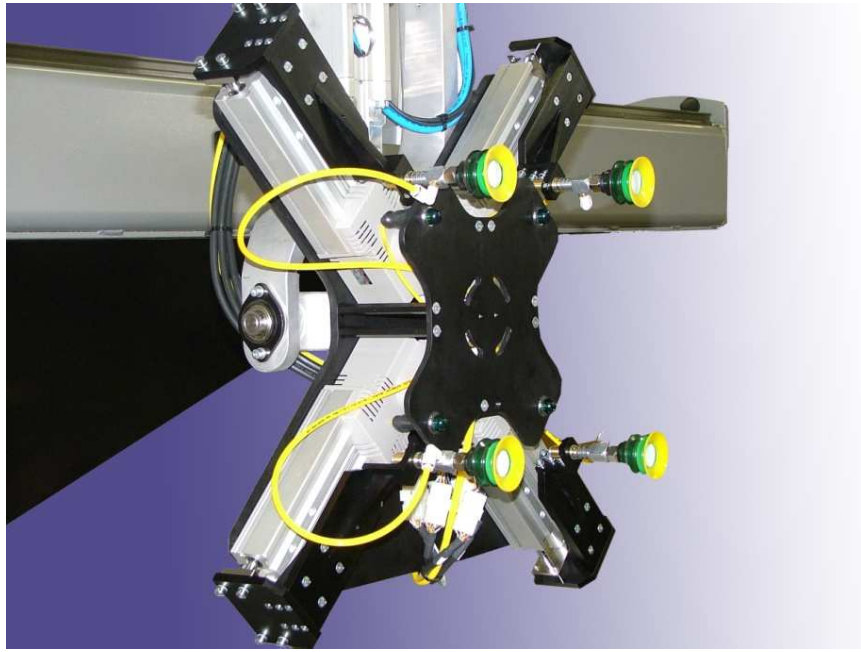

The **TCP** has an associated reference frame

Example

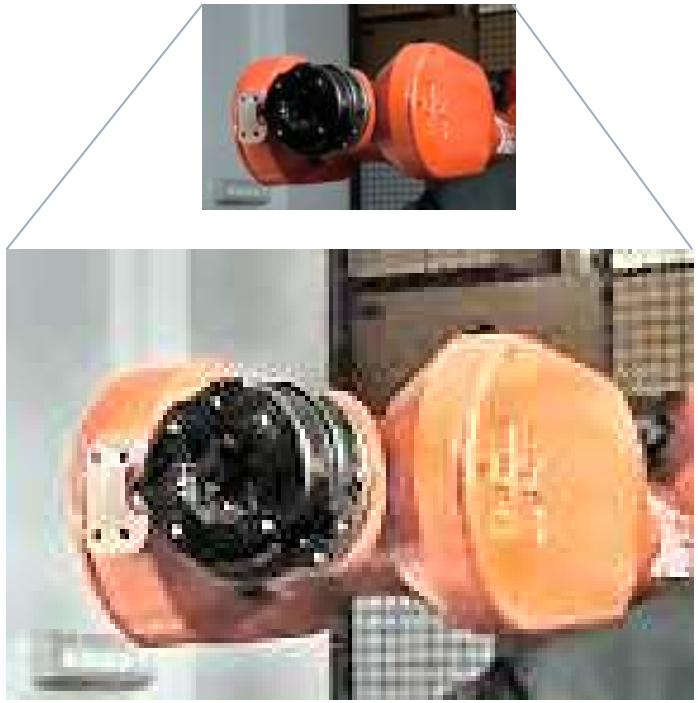

This is the TCP

Graphical representation

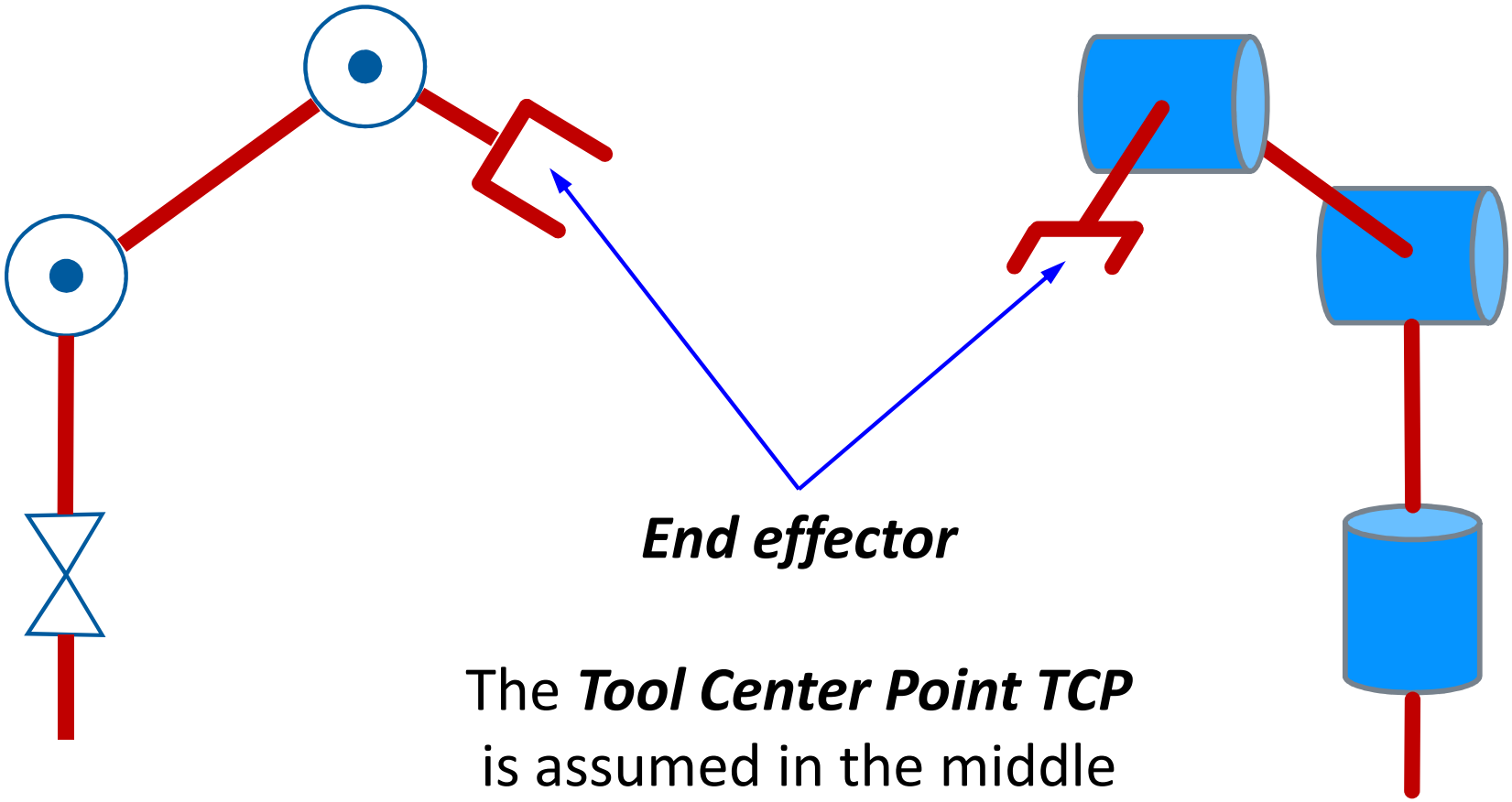

The ***Tool Center Point TCP***
is assumed in the middle

Task space

The TCP moves in a 3D cartesian/euclidean space called

Task Space

The Task space is the subset of the cartesian space that can be reached by the TCP

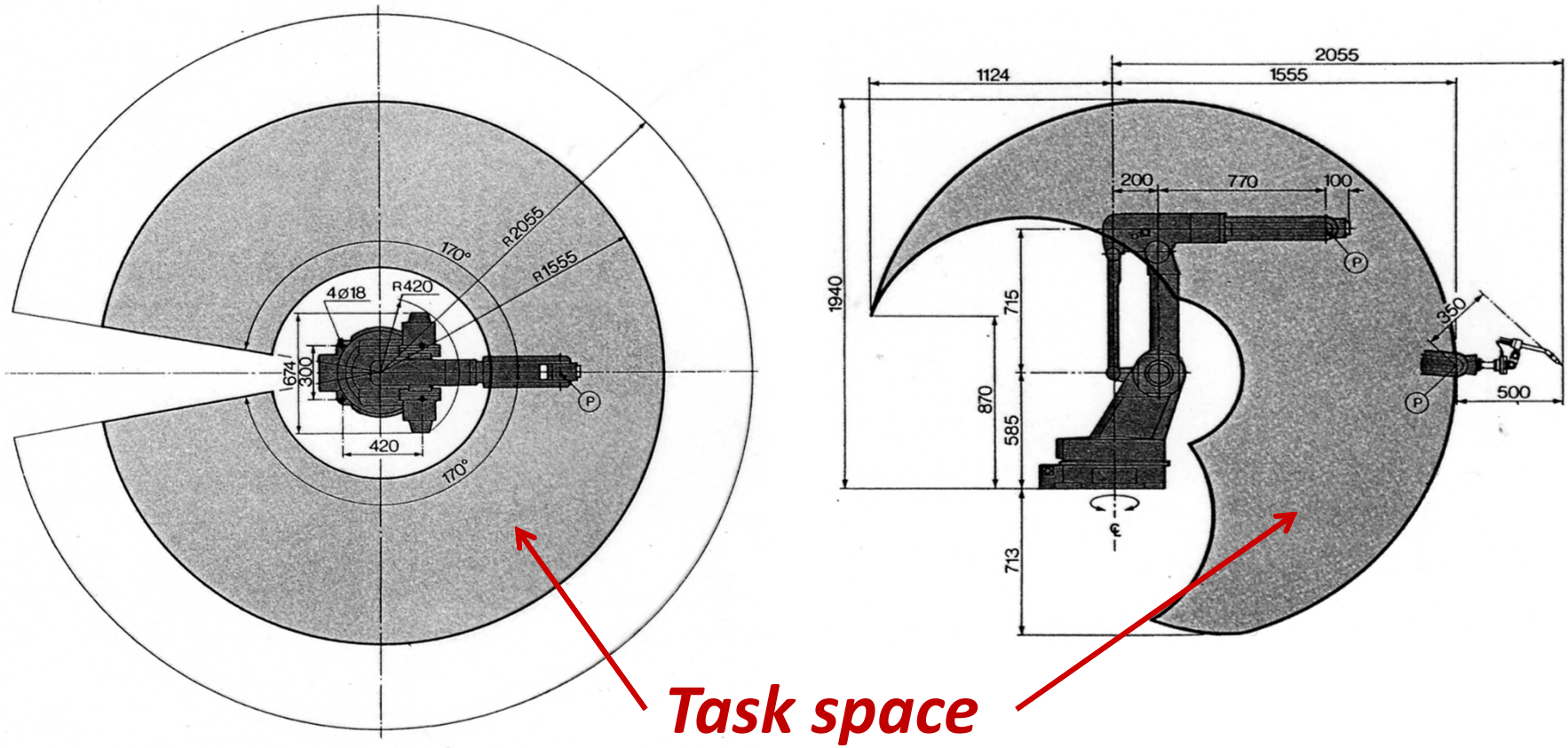

Joint space

The ***Joint Space*** is the mathematical structure ($\longrightarrow$ vector space) whose elements are the joint values

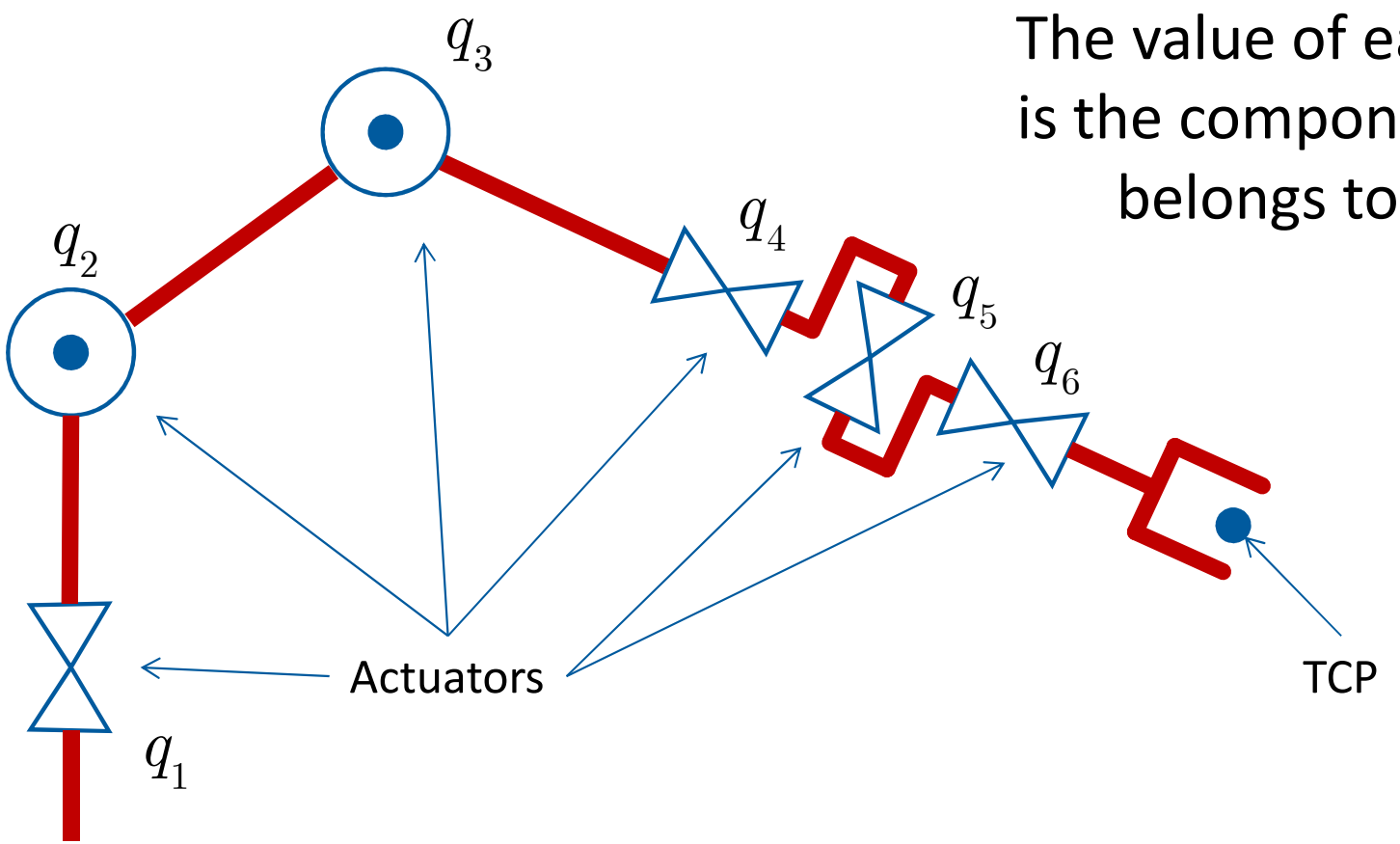

The value of each joint variable q_i is the component of a vector that belongs to the **<u>joint space</u>**

Joint space vs Task space

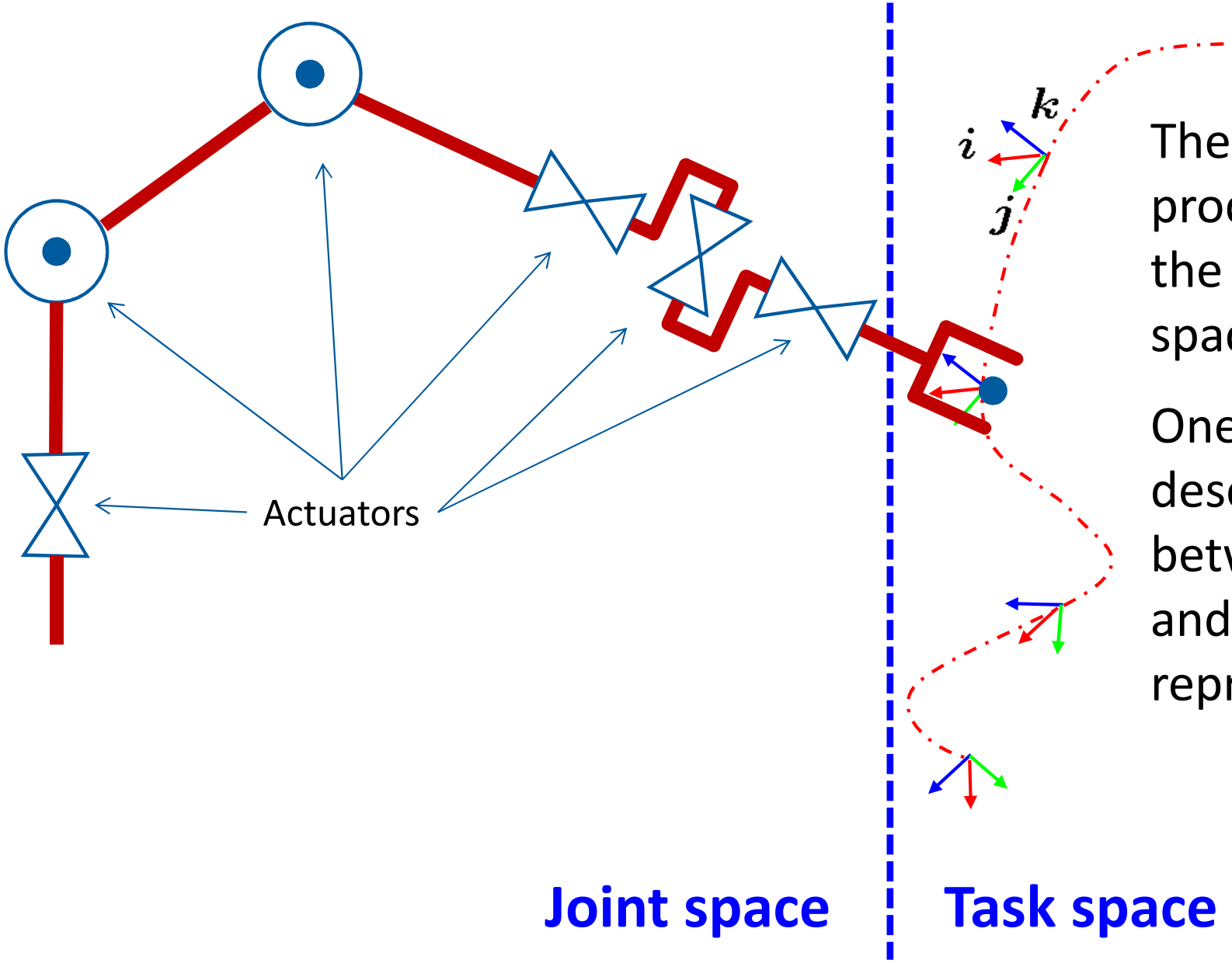

The joint motion produces a motion of the TCP in the task space.

One shall be able to describe the relation between the joint space and the task space representations

Tasks space $\leftrightarrow$ Joint space = kinematic functions

This vector is called the ***pose*** of an object in the TS

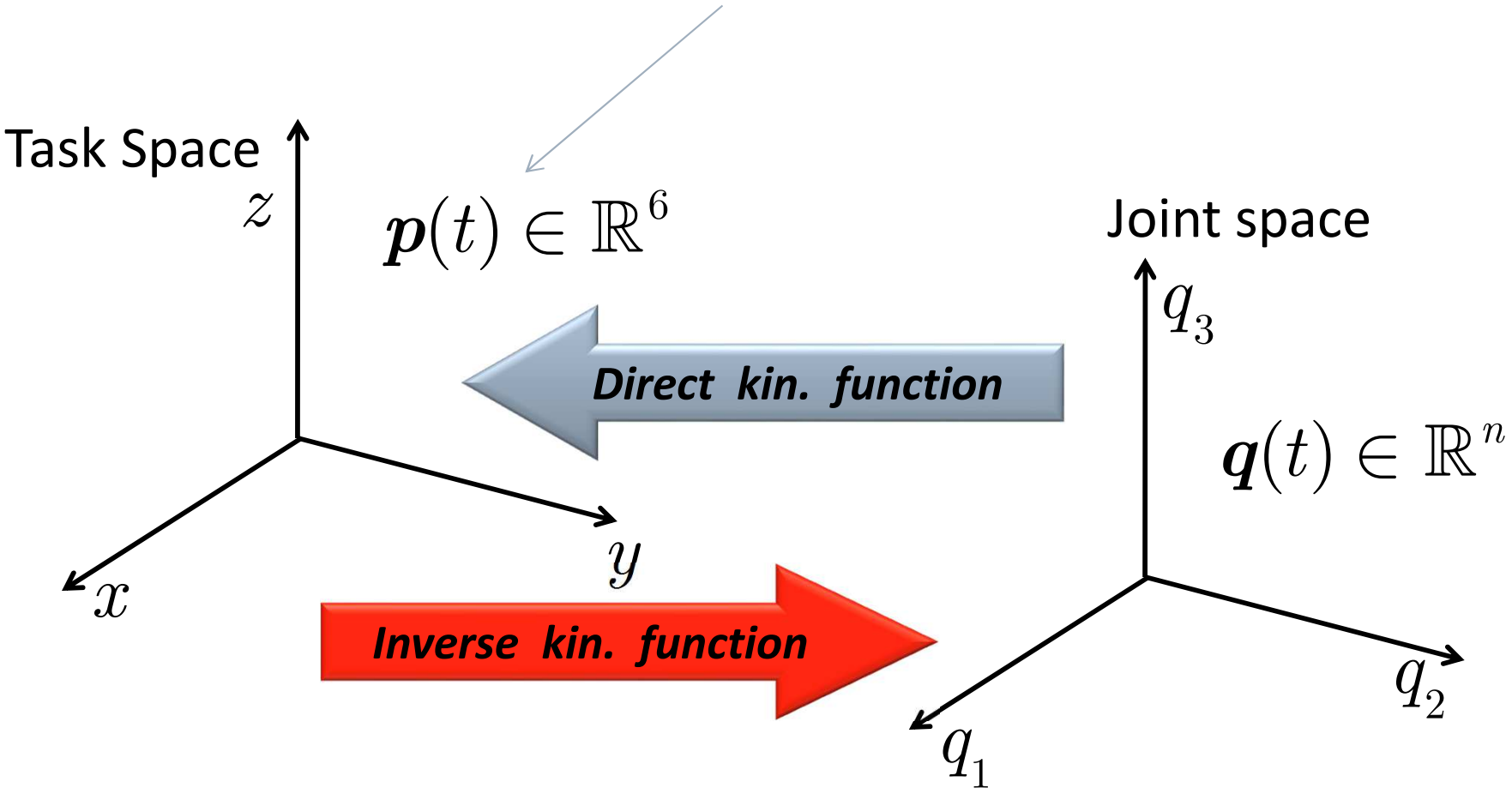

Direct kinematic function is easier than inverse kinematic function

Degrees of freedom – redundancy

1. Each added joint increases the ***degree of motion*** (DOM)

<u>Robot DOM</u> $= n$

2. The number of independent variables that describe the TCP reference frame is called the TCP degree of freedom (DOF).

<u>TCP DOF</u> = $n' \leq 6$

3. The number of independent variables that characterize or are required by the task reference frame is called the task DOF

<u>Task DOF</u> = $m \leq 6$

n can be as large as desired, but

$m, n' \leq 3$ in the 2D plane,

$m, n' \leq 6$ in the 3D space

$$\boldsymbol{p}_{2D}(t) = \left[x, y, \theta\right]^{\mathsf{T}} \in \mathbb{R}^2 \oplus SO(2) \qquad \boldsymbol{p}(t)_{3D} = \left[x, y, z, \phi, \theta, \psi\right]^{\mathsf{T}} \in \mathbb{R}^3 \oplus SO(3)$$

Degrees of freedom

A robot with n DOMs does not always have a TCP with n' = n DOFs

Since the TCP DOF should be equal to the task DOF (otherwise the robot is useless for that task …) one can consider the following cases

$$\text{Case 1: } n = n' = m$$
$$\text{Case 2: } n = n' > m$$
$$\text{Case 3: } n = n' < m$$
$$\text{Case 4: } n > n' = m$$

<u>Case 1</u> is the most common case; the robot is called ***non-redundant***. It has as many TCP DOF as required by the task

<u>Case 3</u> is an unlikely case; the robot TCP has less DOF than those required by the task. Therefore it is a useless robot (for that task)

<u>Case 2</u> and <u>Case 4</u> are particular cases. <u>Case 4</u> represents a ***redundant*** robot; <u>Case 2</u> is impossible for m = 6, but is possible for m < 6; in this case the robot is ***redundant*** again

Redundancy

The kinematic chains called ***redundant chains*** have more TCP DOF that those required by the task.

Some authors also consider Case 4 as a redundant chain, since in both cases $n > m$

Why redundant robots are important or useful ?

They improve manipulability or dexterity, i.e., the ability to reach a desired pose avoiding obstacles, like the human arm does

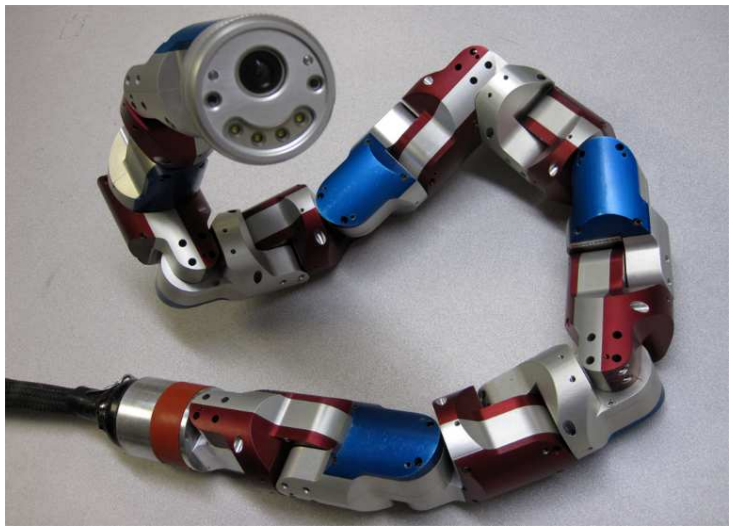

$$n - m \text{ is the redundancy degree}$$

Example of redundancy

This KC has three prismatic joints (all parallel) that allow only one DOF to the TCP

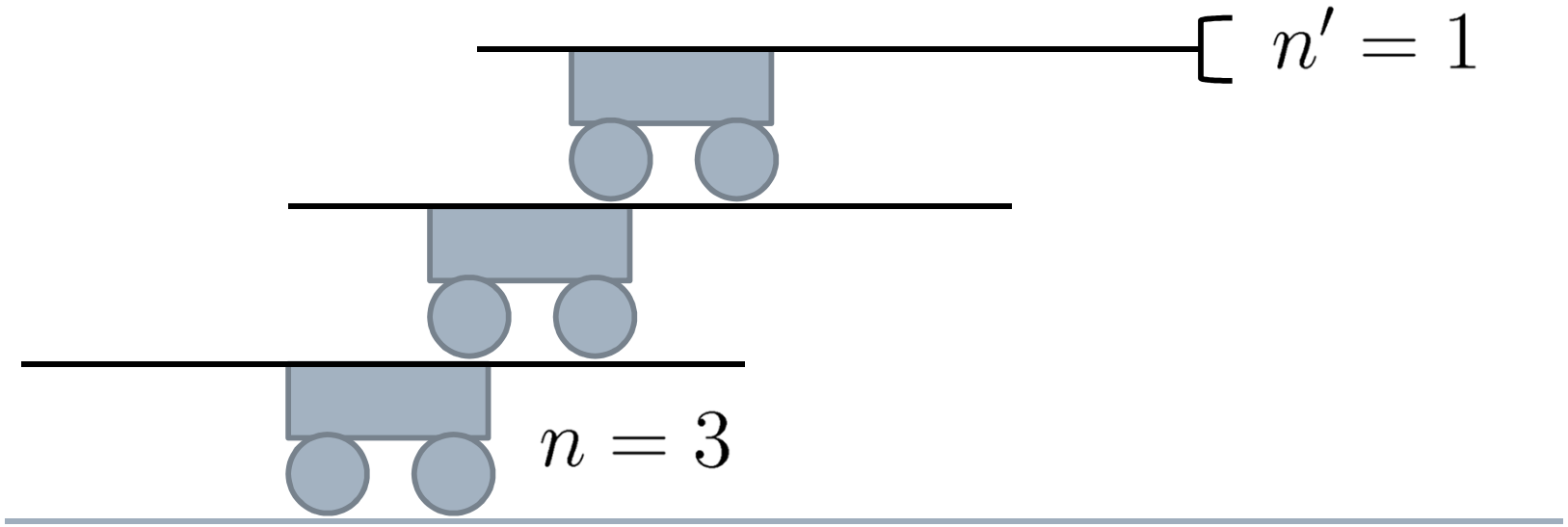

This “robot” has three motors, when only one would be sufficient for the same purpose (apart from other considerations related to redundancy)

Example of redundancy

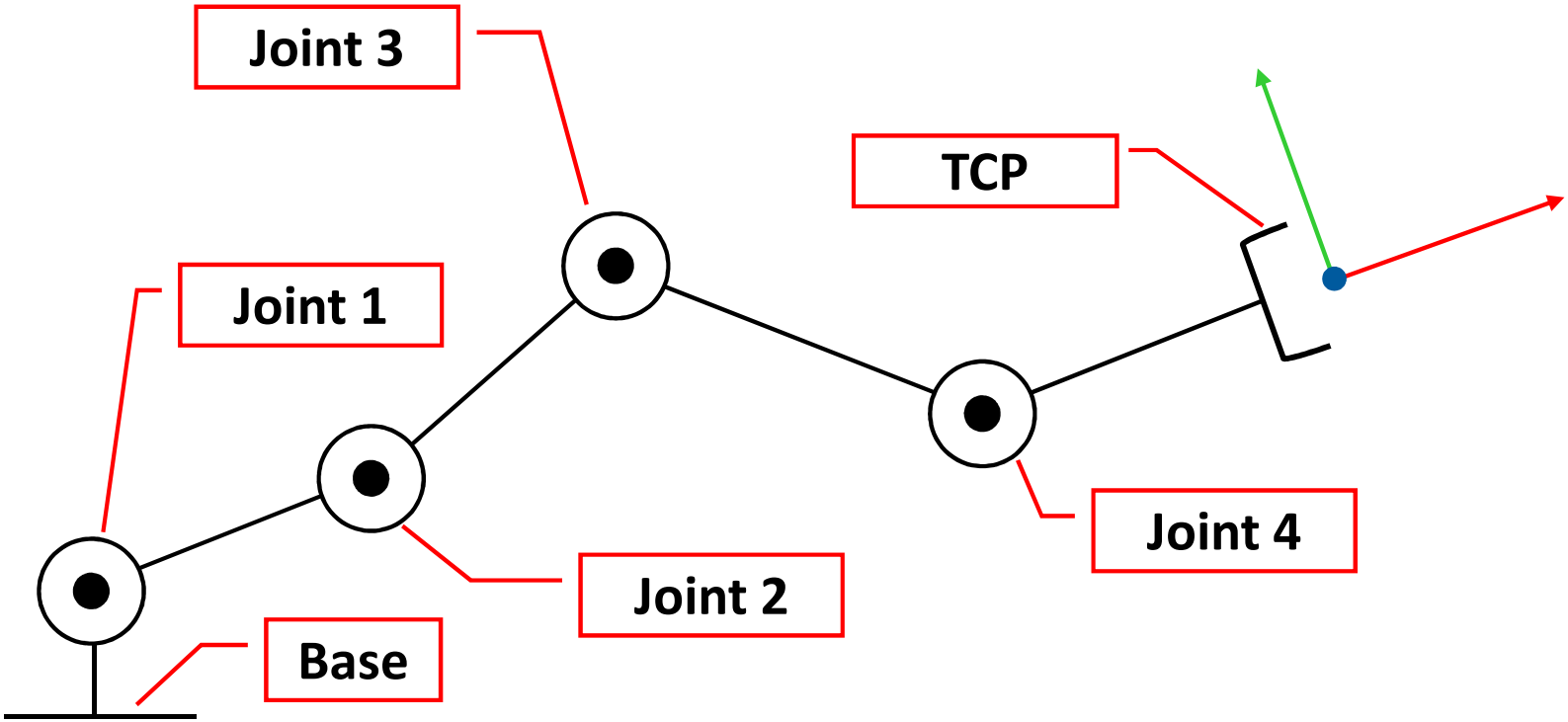

The KC has 4 DOM since there are 4 rotating joints; an object in a plane has only 3 DOF (two positions + one angle). Therefore this KC is redundant (redundancy degree 4-3 = 1).

If the task requires only to position an object, with no particular constraint on the orientation, the DOF will reduce to 2 and the redundancy increases to 4-2=2

Redundancy of the human arm

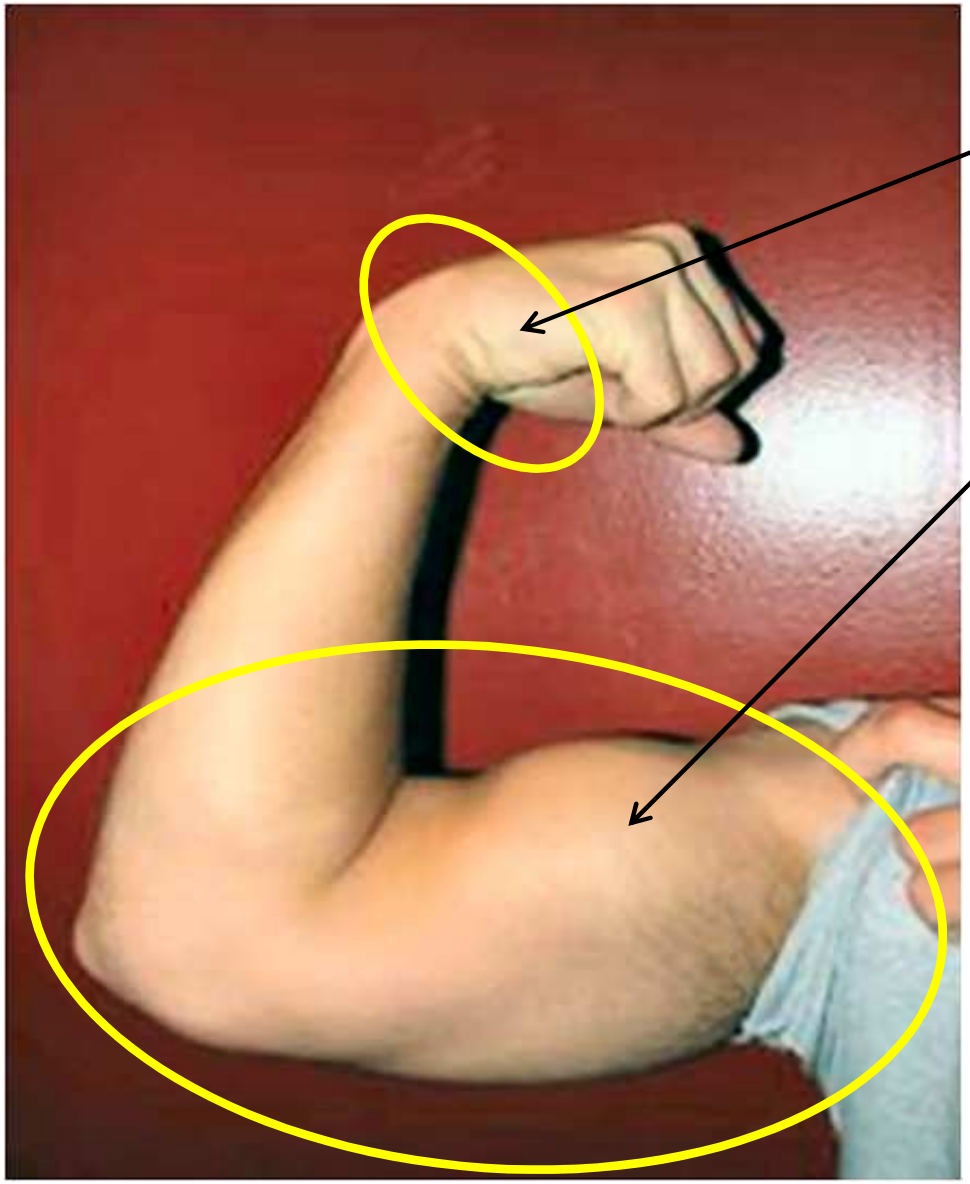

The human (arm + wrist) has 7 **DOFs**

But it is not ideal, since it is composed by muscles, bones and other tissues; it is not a rigid body, the joint are elastic, etc.

Redundancy of the human arm

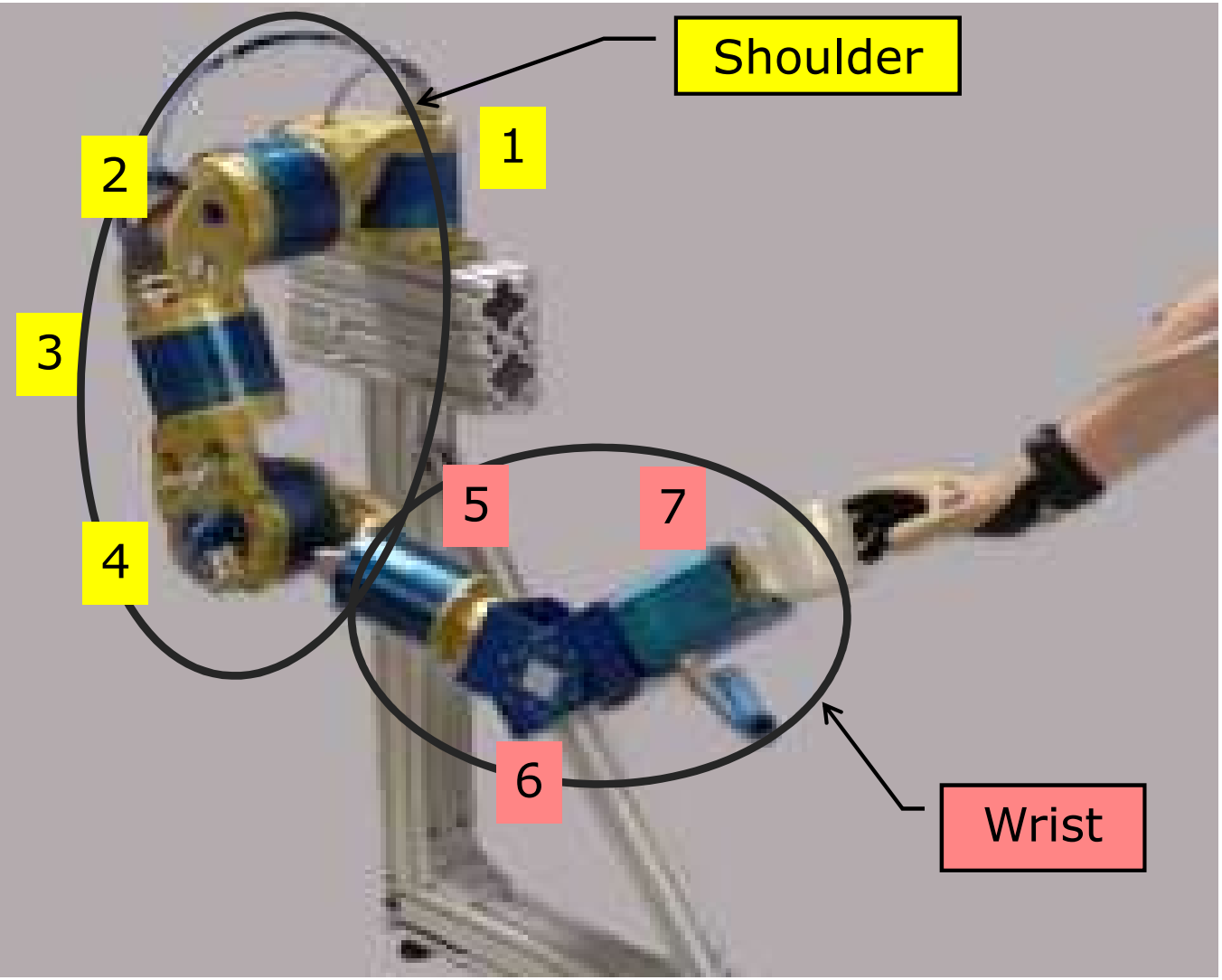

This mechanical arm simulates the human arm

Shoulder = 4 DOM

Wrist = 3 DOM

Industrial robots have a shoulder with 3 DOM (joint 3 is missing), and a wrist similar to this one with 3 DOM

Robot types

Types of robots

Industrial robots are usually composed by a ***shoulder*** and a ***wrist***

The robot types are defined by the arm configuration, based on the type of its joints

P = prismatic joint

R = revolute joint

Robots are classified according to the following classes

- **Cartesian** = **3P**
- **Cylindrical** = **1R-2P**
- **Polar** or **Spherical** = **2R-1P**
- **SCARA** = **2R-1P**; (SCARA = Selective Compliance Assembly Robot Arm)
- **Articulated** or **Anthropomorphic** = **3R**

There are also **parallel** robots, but they belong to a separate class

Cartesian

- **Cartesian** = 3P = P-P-P
  - The shoulder is composed by three prismatic joints, with mutually orthogonal axes
  - Each DOM corresponds to a cartesian task variable
  - The task space is a sort of parallelepiped
  - They provide an accurate positioning in the whole task space, but have a limited dexterity
  - The most common structures are lateral columns or suspended bridges

Cartesian

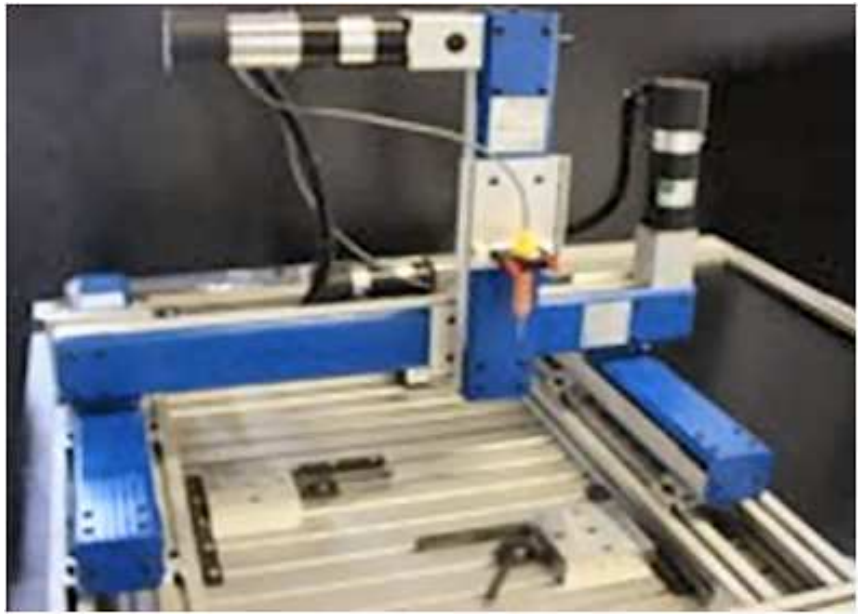

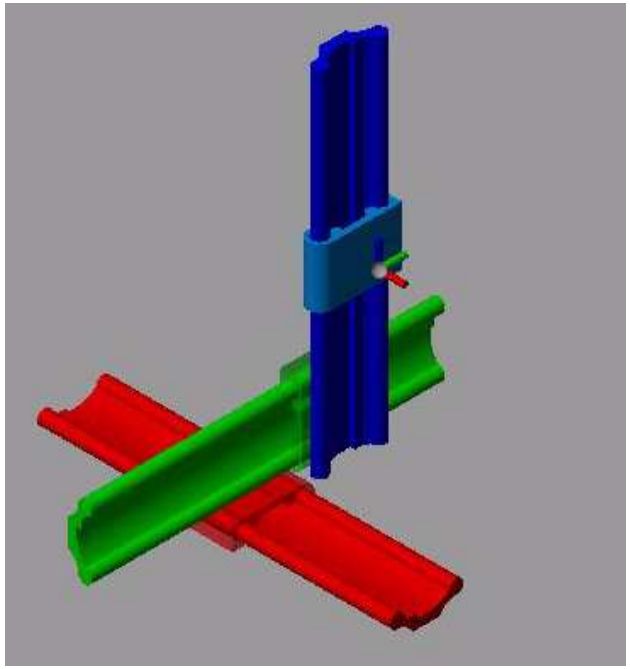

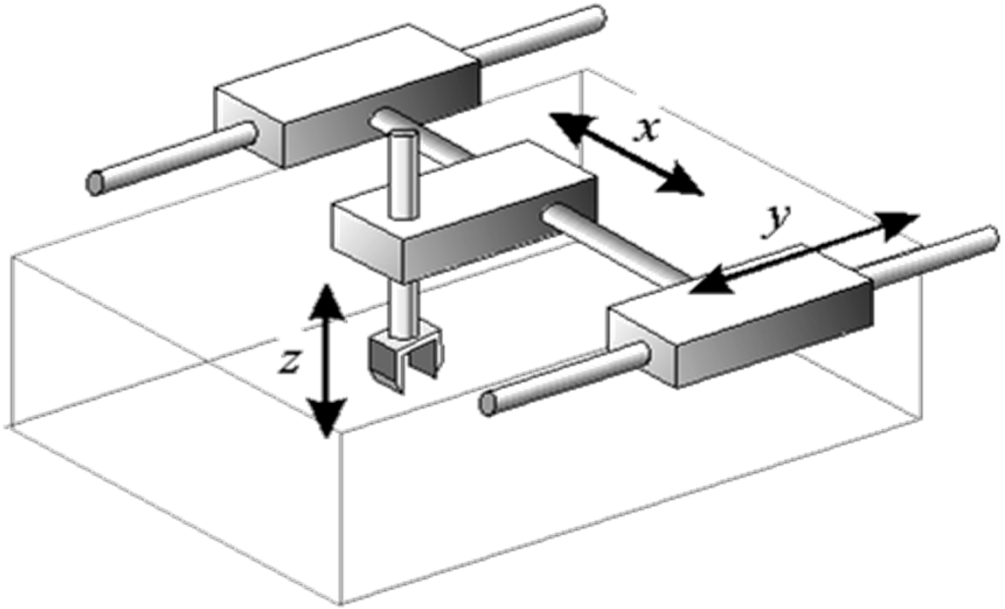

Cylindrical

- **Cylindrical** = 1R-2P = R-P-P
  - The shoulder has one revolute joint with vertical axis followed by two prismatic joints (one vertical the other horizontal)
  - Each DOM corresponds to one cylindrical coordinate
  - The task space is a cylindrical sector
  - The horizontal prismatic joint allows to reach horizontal spaces, but the accuracy decreases toward the arm ends
  - They are used mainly to move large objects

Cylindrical

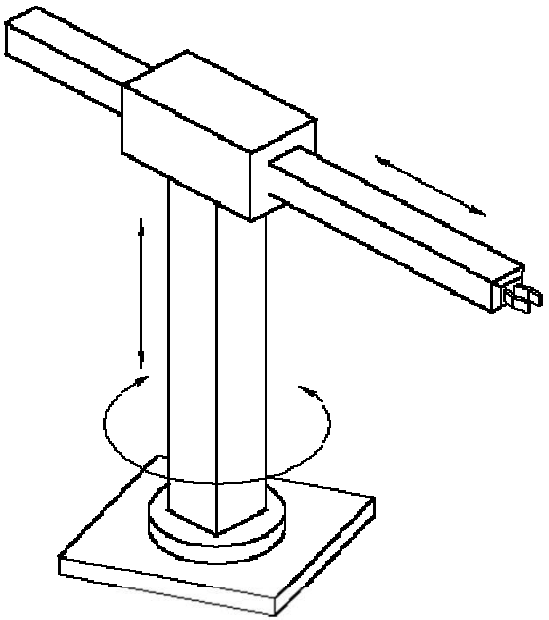

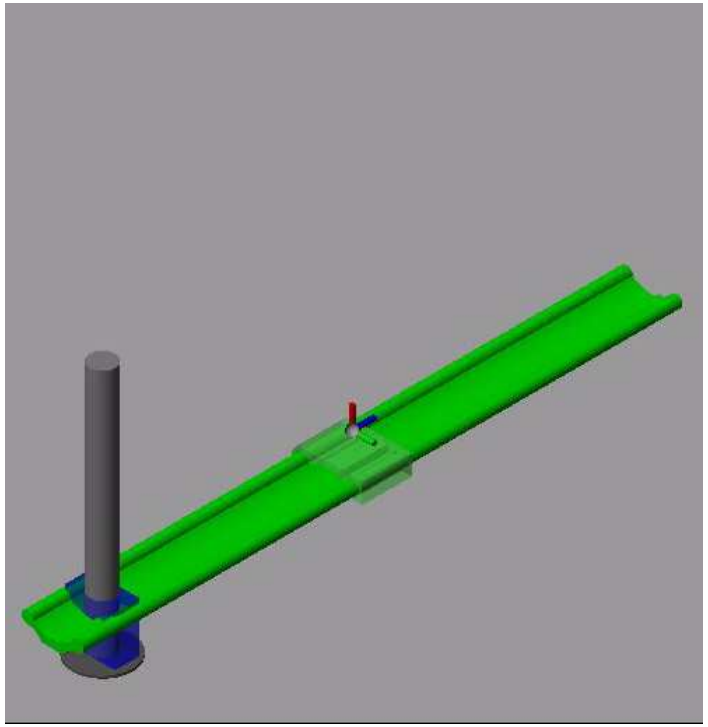

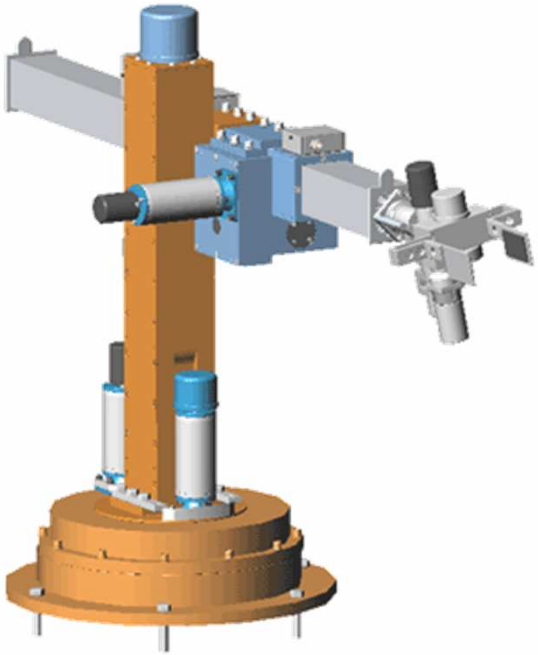

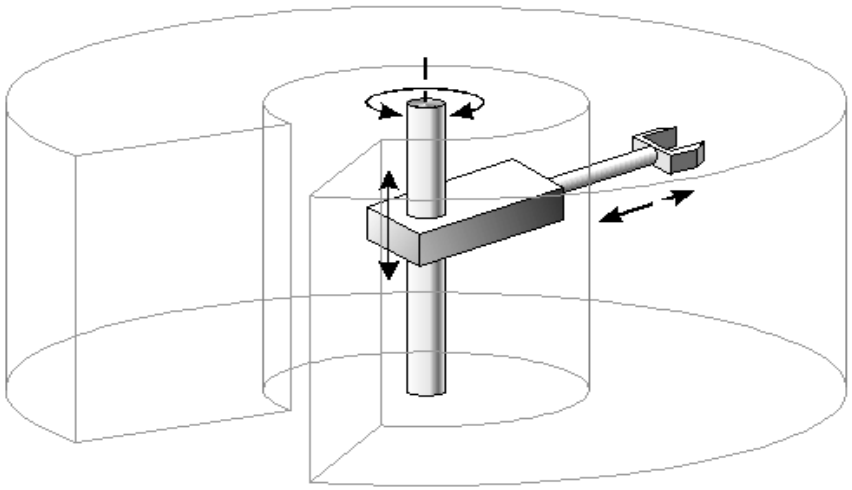

Polar or spherical

- **Polar** or **spherical** = 2R-1P = R-R-P
  - The shoulder has two revolute joints (one vertical, one horizontal axis) followed by a prismatic joints (with axis orthogonal to the last one)
  - Each DOM corresponds to one polar coordinate
  - The task space is a spherical sector that may include part of the floor, to allow the manipulation of objects there
  - The structure is less rigid than the previous ones, and the accuracy decreases with the elongation of the prismatic arm

Polar or spherical

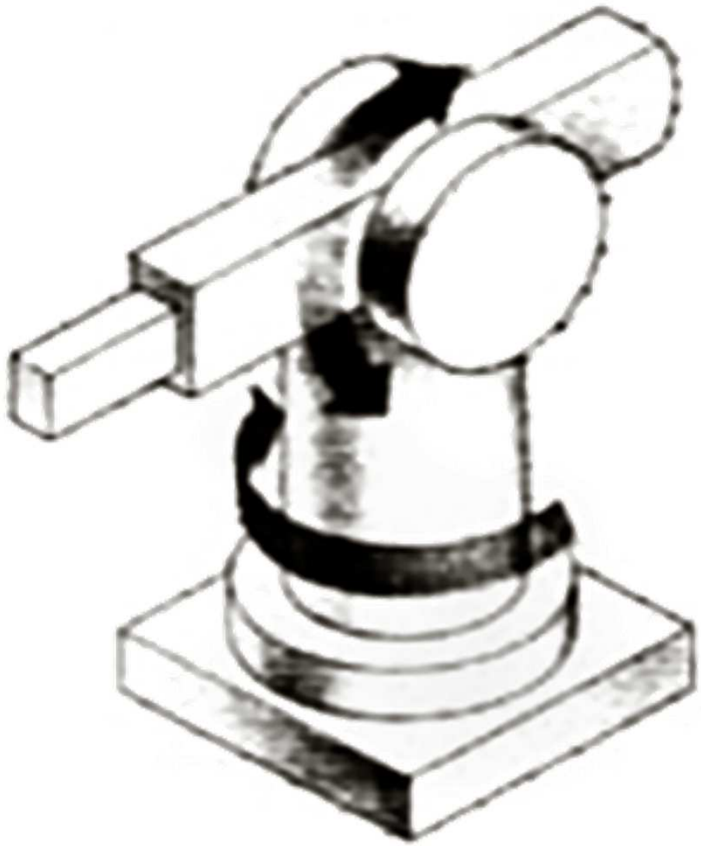

Example

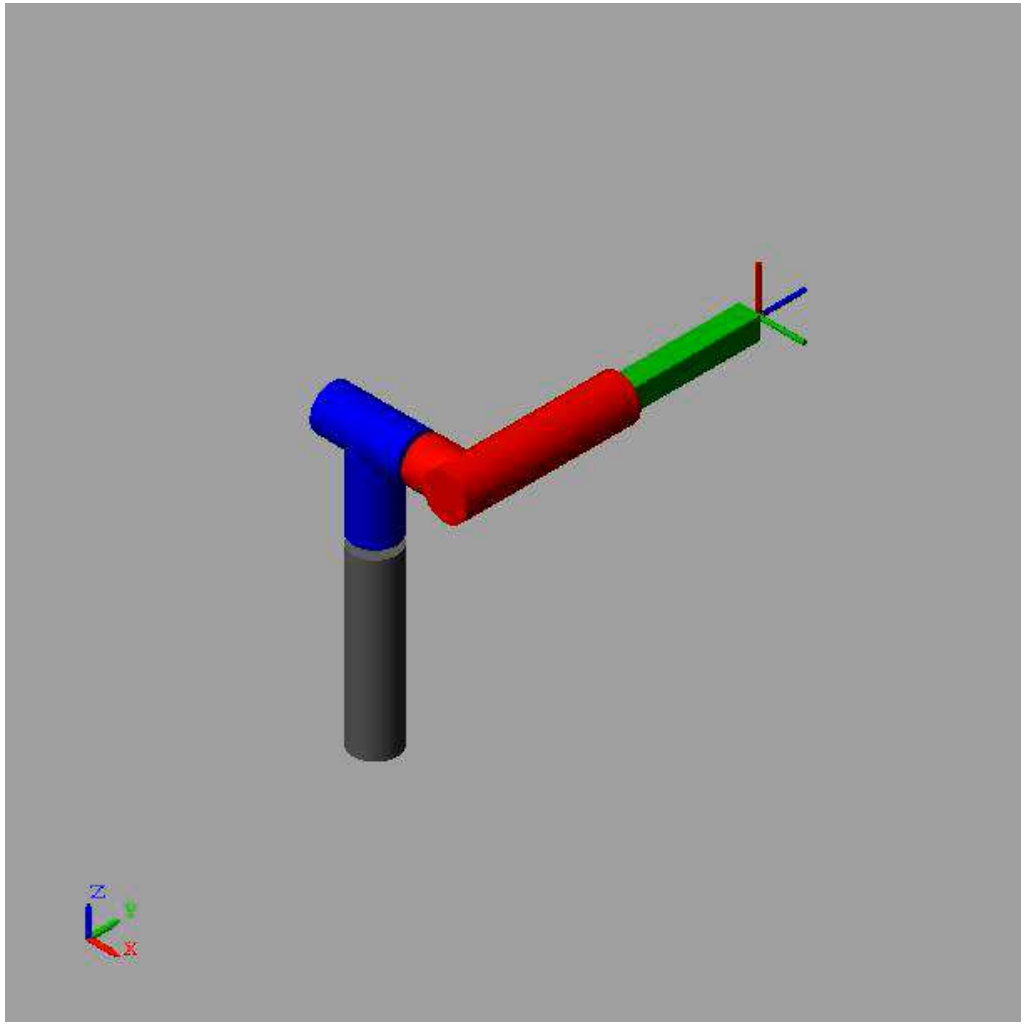

SCARA

- **SCARA** = 2R-1P = R-R-P
  - The shoulder has two revolute joints followed by one prismatic joints (all with parallel/vertical axes)
  - The correspondence between DOM and cartesian coordinates is true only for the vertical component
  - The effect of gravity is compensated by the structure itself
  - The structure is rigid in the vertical component and compliant in the horizontal components
  - This robot is mainly used for small components manipulation and vertical soldering or assembly tasks (e.g., in electronic boards assembly)

SCARA

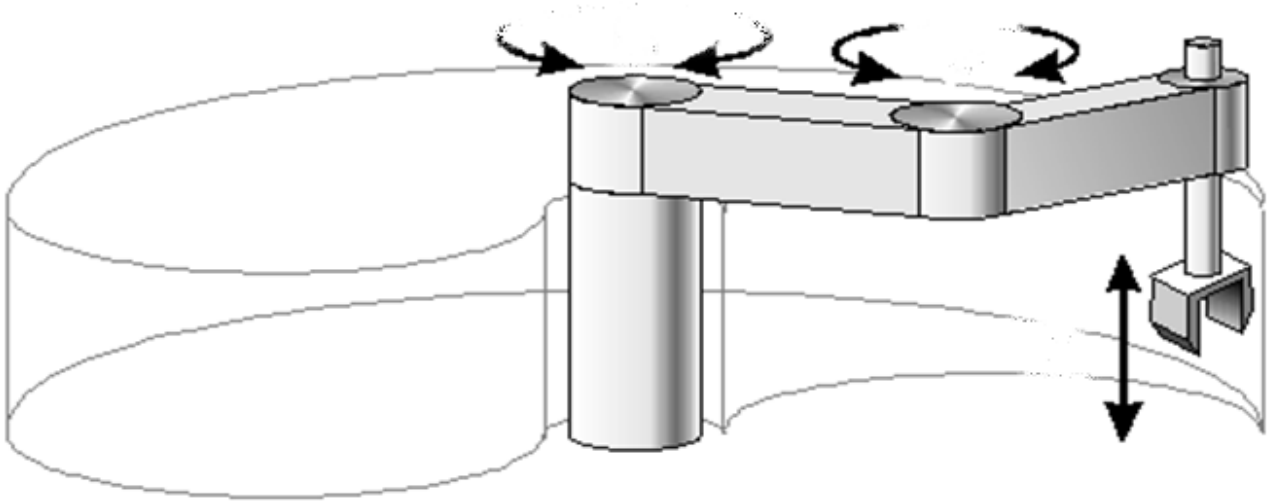

Example

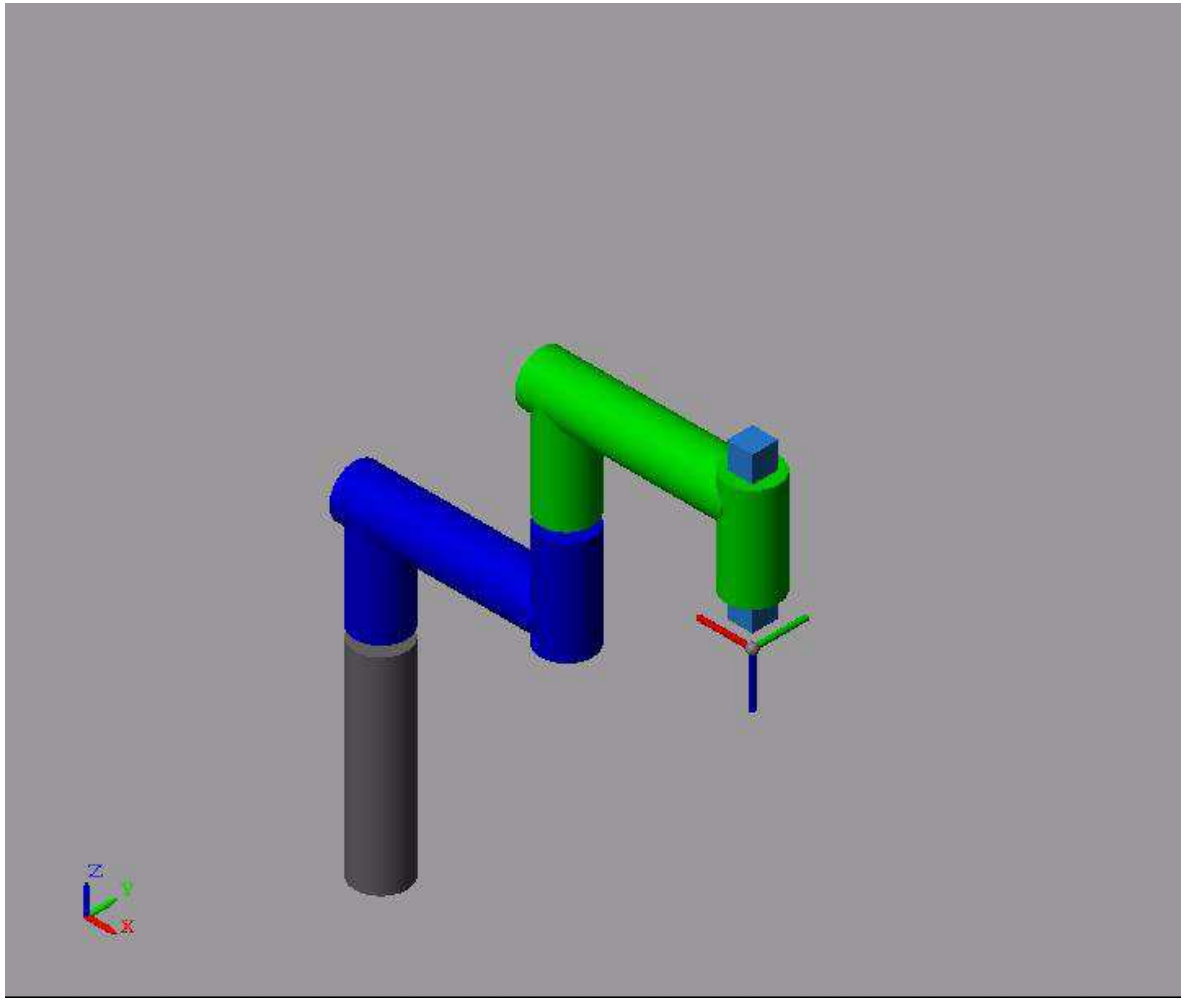

Articulated/Antropomorphic

- **Articulated** or **Anthropomorphic** = 3R = R-R-R
  - The shoulder has three revolute joints: the first one is vertical, the other two are horizontal and parallel
  - The structure is similar to the human body, with trunk, arm and forearm, with a final wrist
  - No correspondence between joint and cartesian coordinates
  - Task space is a sort of sphere sector
  - It is one of the most common structures in industry, since it provides the best dexterity
  - Its accuracy is not constant inside the task space

Articulated/Antropomorphic

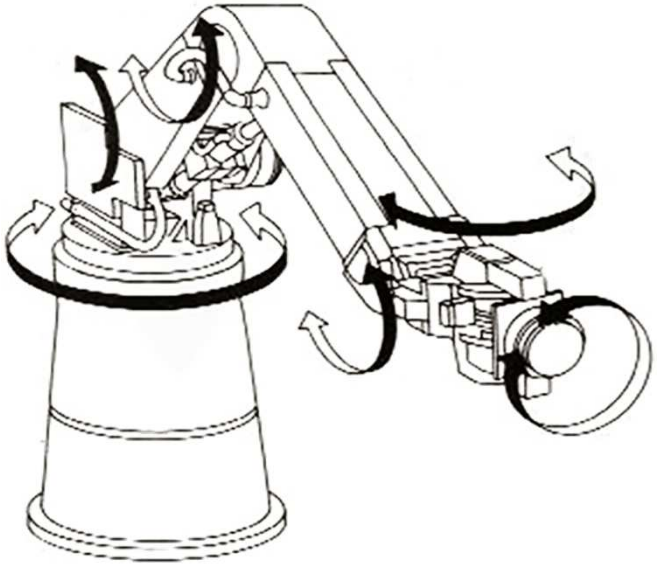

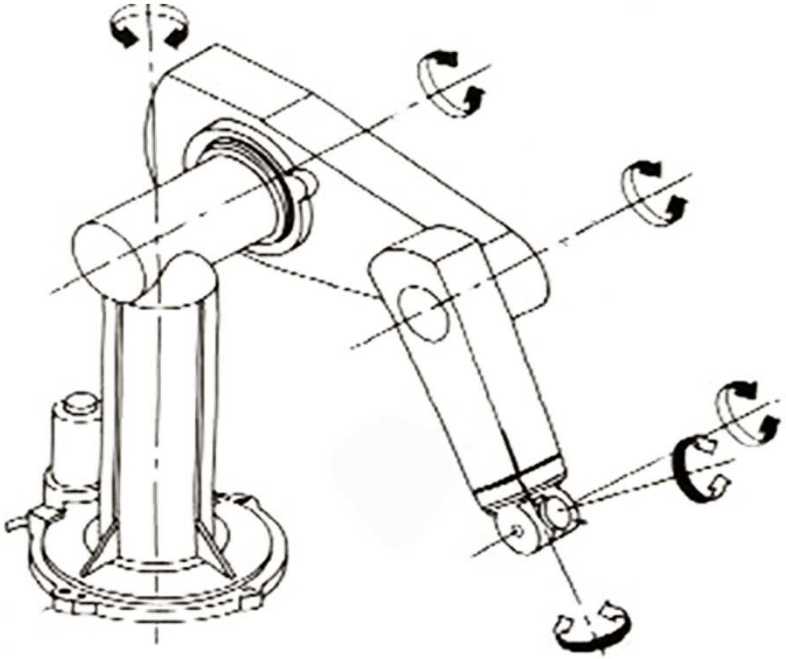

Example

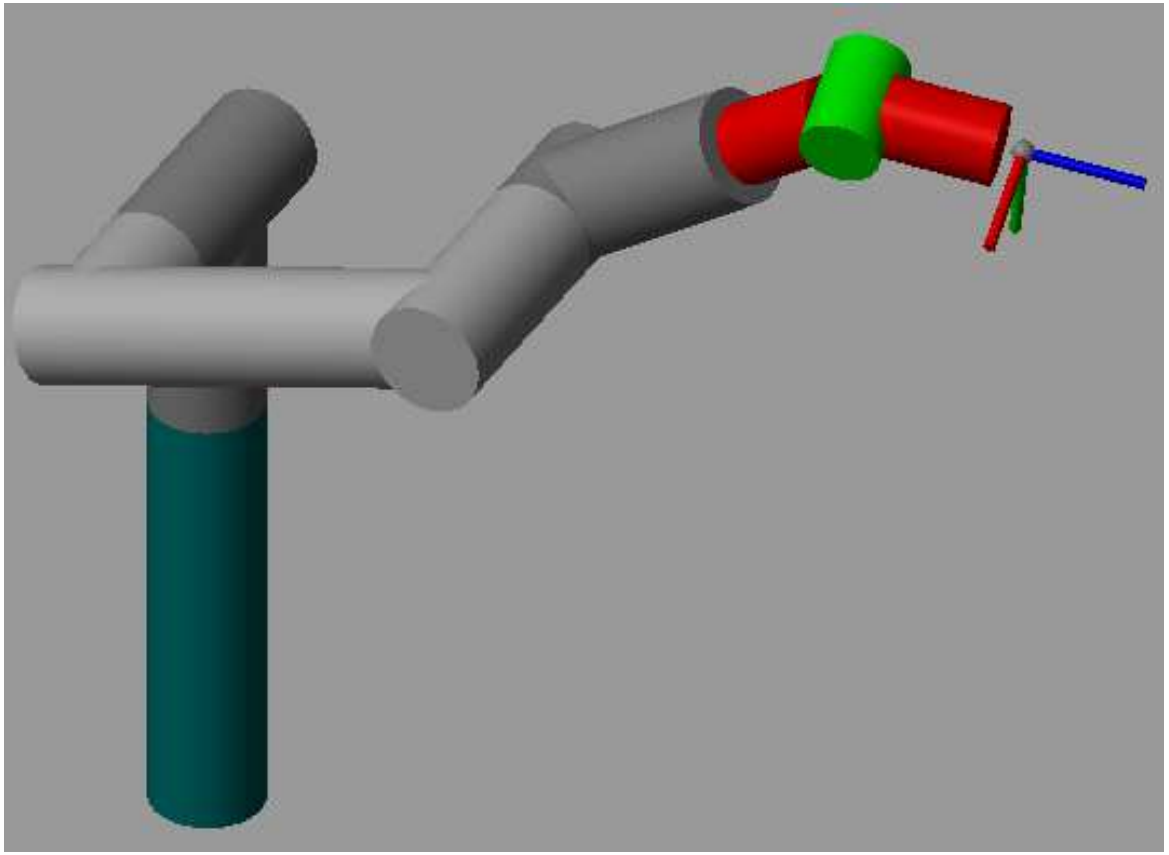

Parallel or closed chains

- **Parallel** or closed chains
  - Closed chains are used to manipulate heavy payloads requiring a great rigidity of the structure
  - Examples
    - Articulated robots with parallelogram links between the second and the third link
    - Parallel geometry robots where the TCP is connected to the base through more kinematic chains
      - Large structural rigidity with high TCP speed
      - Reduced task space

Parallel or closed chains

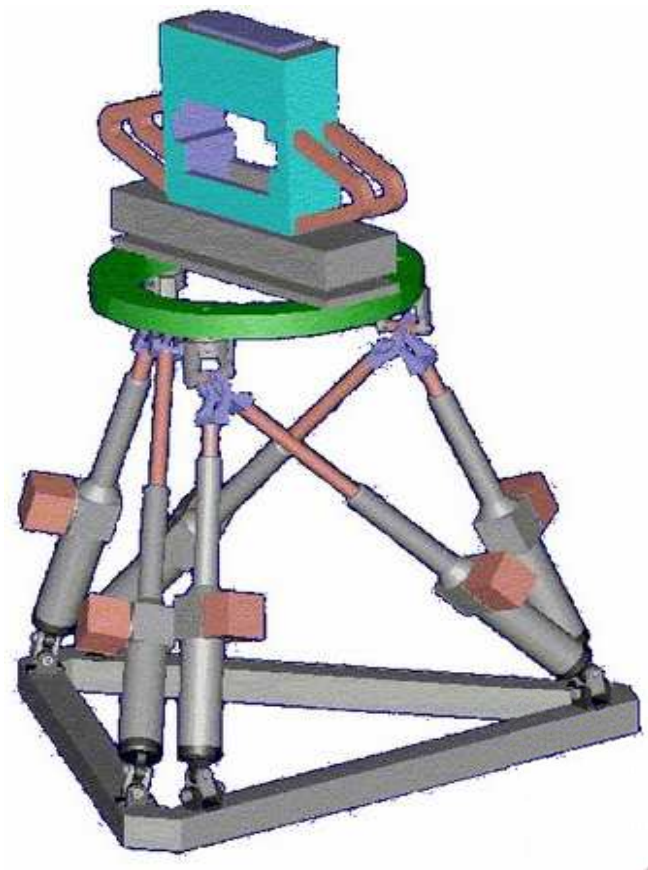

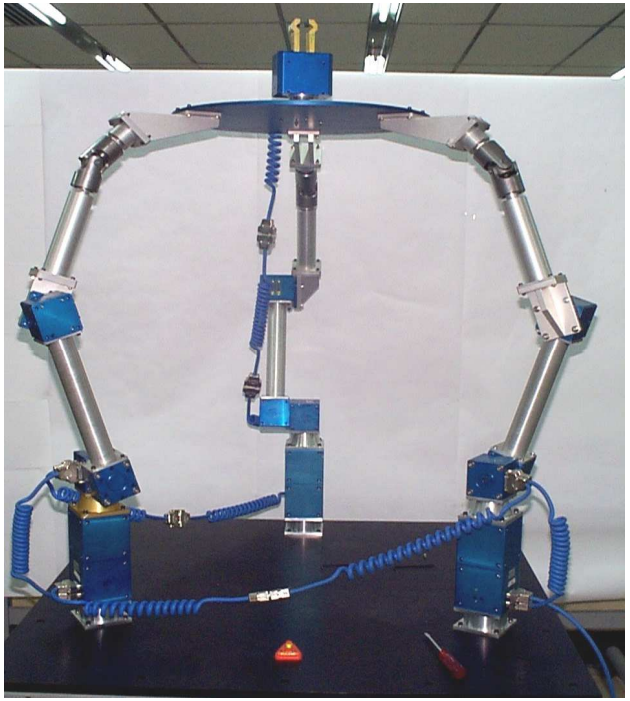

Example

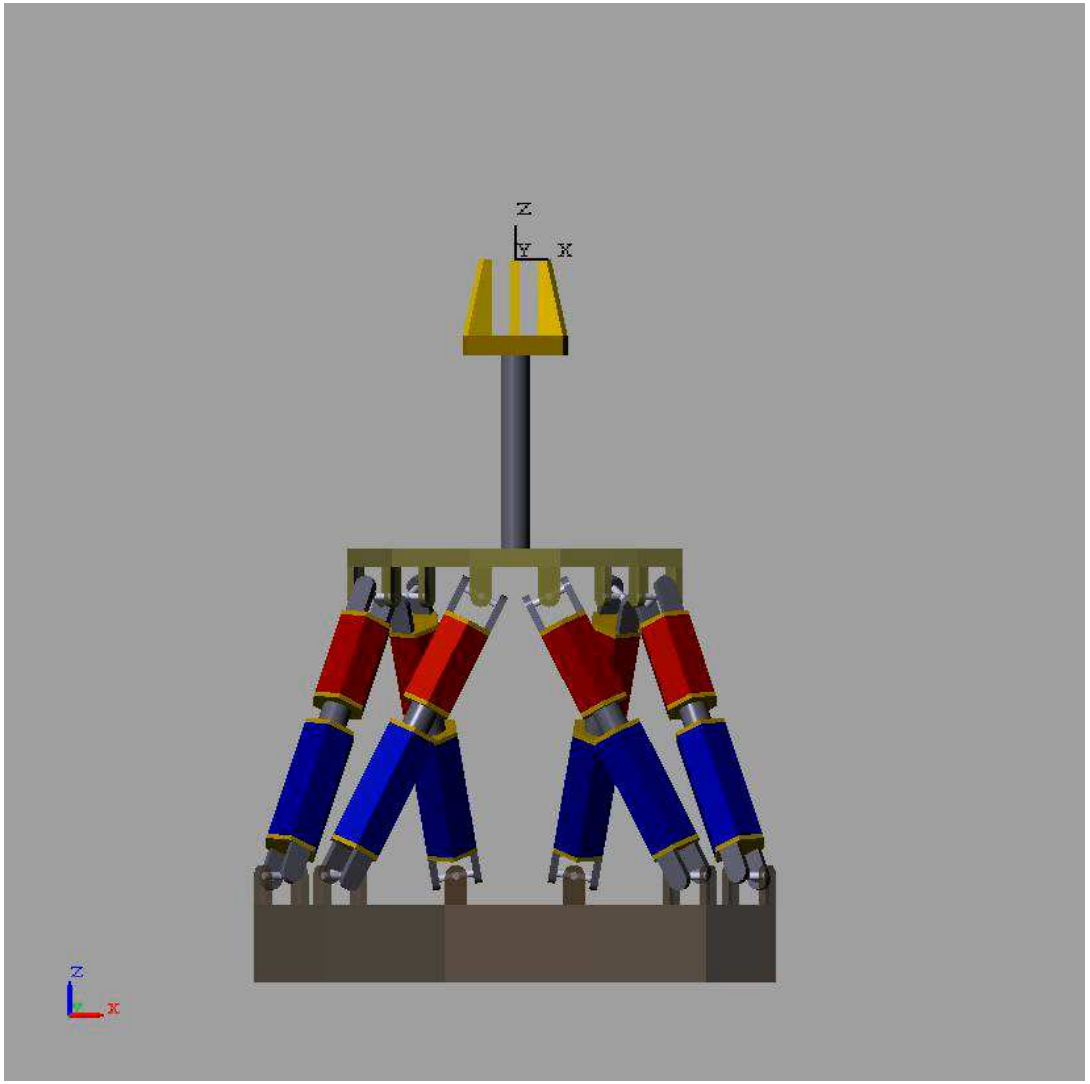

Wrists

Wrists

- The main scope of the **wrist** is to orient the TCP
- It can be said that the shoulder sets the TCP origin position, while the wrist orients the TCP
- Spherical wrists are the most common: a **spherical wrist** is a wrist that has the three axes always intersecting in a single point
- A wrist (spherical or not) is composed by three consecutive rotational joints (prismatic wrist are uncommon); the mutual configuration of the three axis identifies two main types of wrists

1. **Eulerian** wrist
2. **Roll-pitch-yaw** (RPY) wrist

Examples: spherical wrist

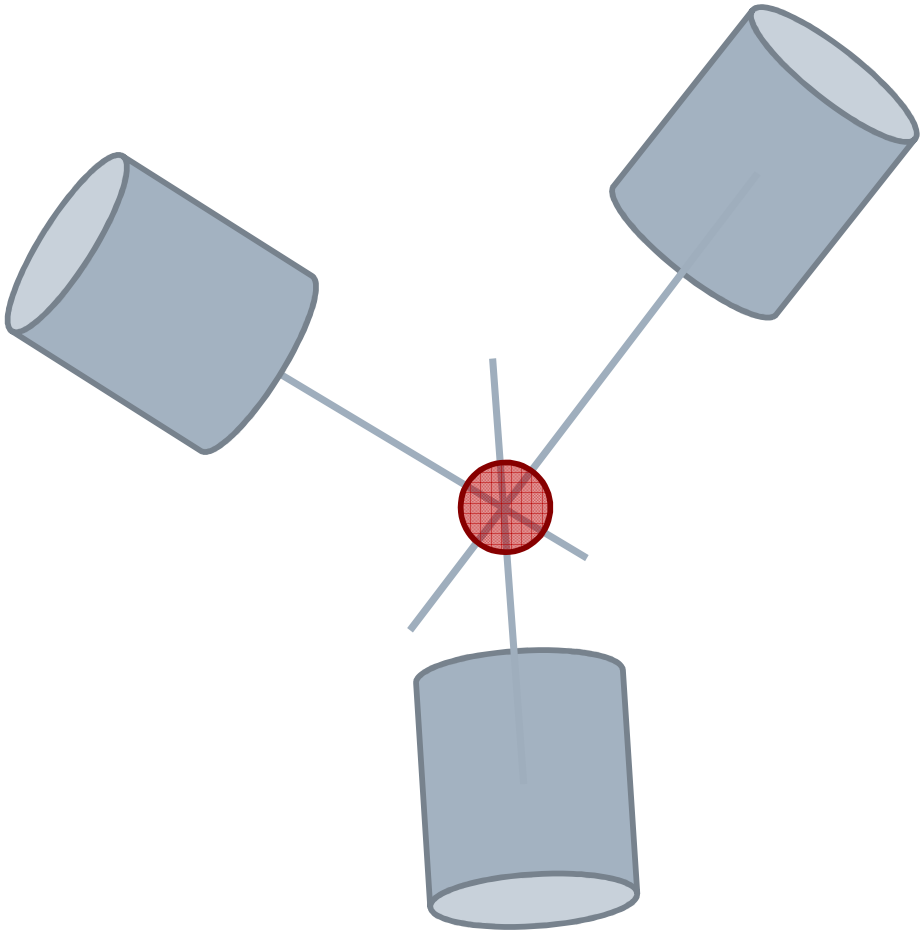

A spherical wrist

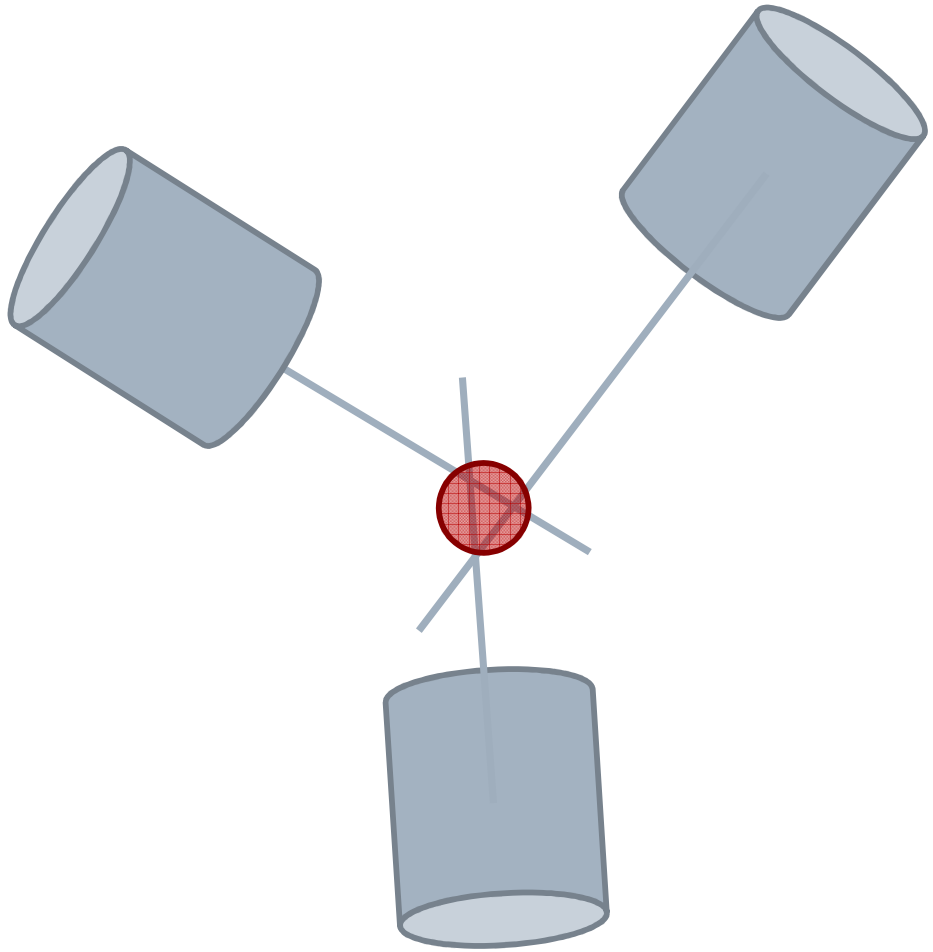

A non spherical wrist

Wrists types

- **Eulerian** 3R

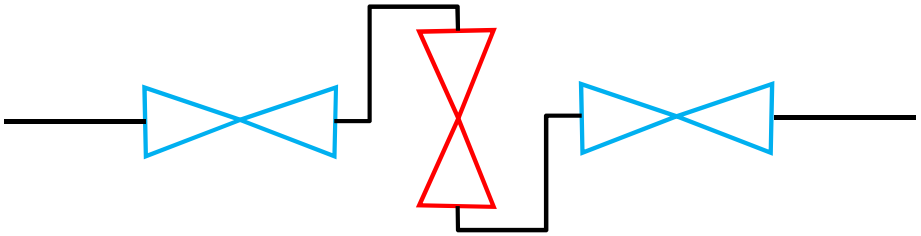

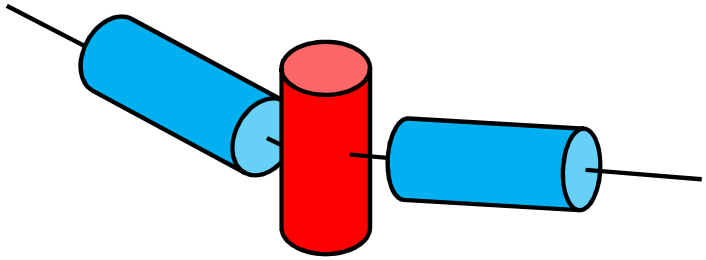

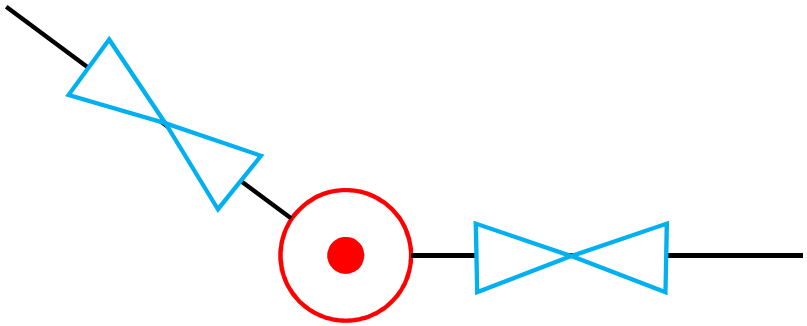

Spherical wrist

- **RPY** (Roll-Pitch-Yaw) 3R

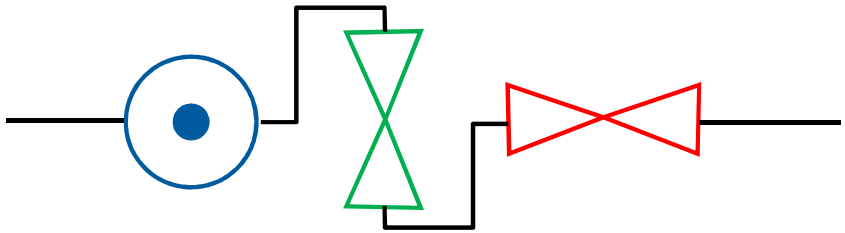

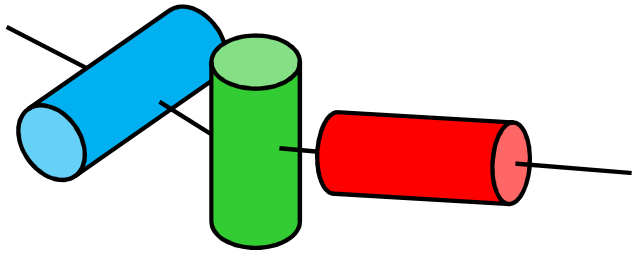

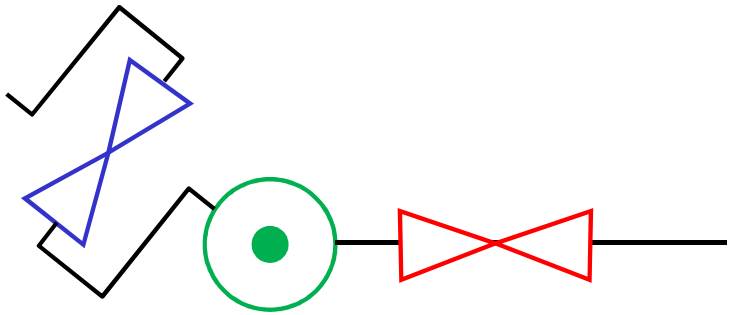

Wrists characteristics

- An Eulerian wrist is a **spherical** wrist

- A RPY wrist is considered spherical, although its three axes do not meet at a single point, due to physical volumes

- When computing or performing inverse kinematics, the presence of a spherical wrists is a sufficient condition for the existence of a closed form solution

Exotic wrists

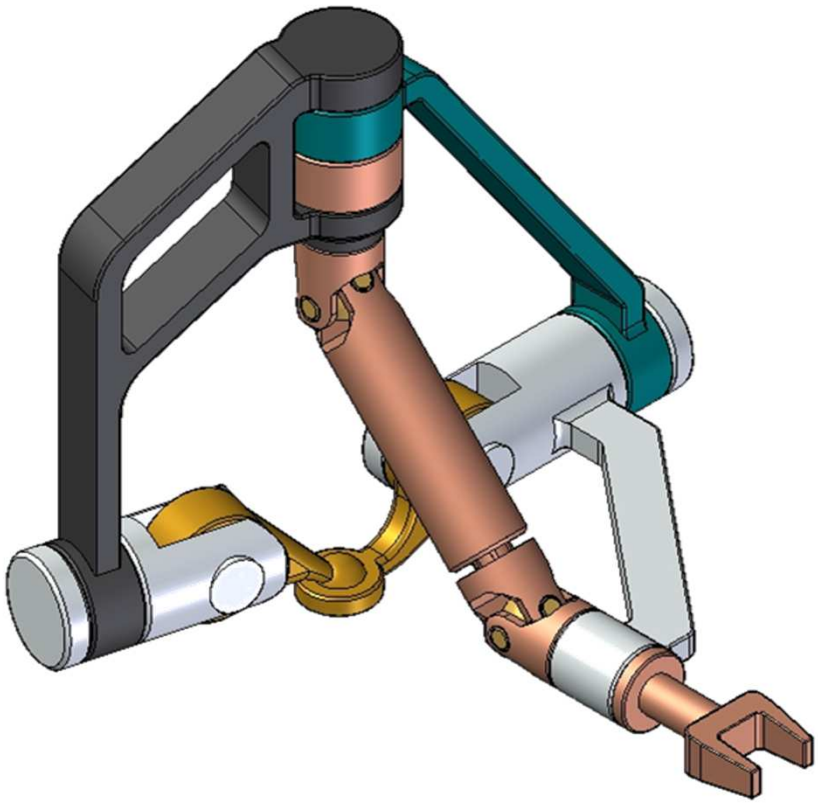

A 7-dof redundant robot
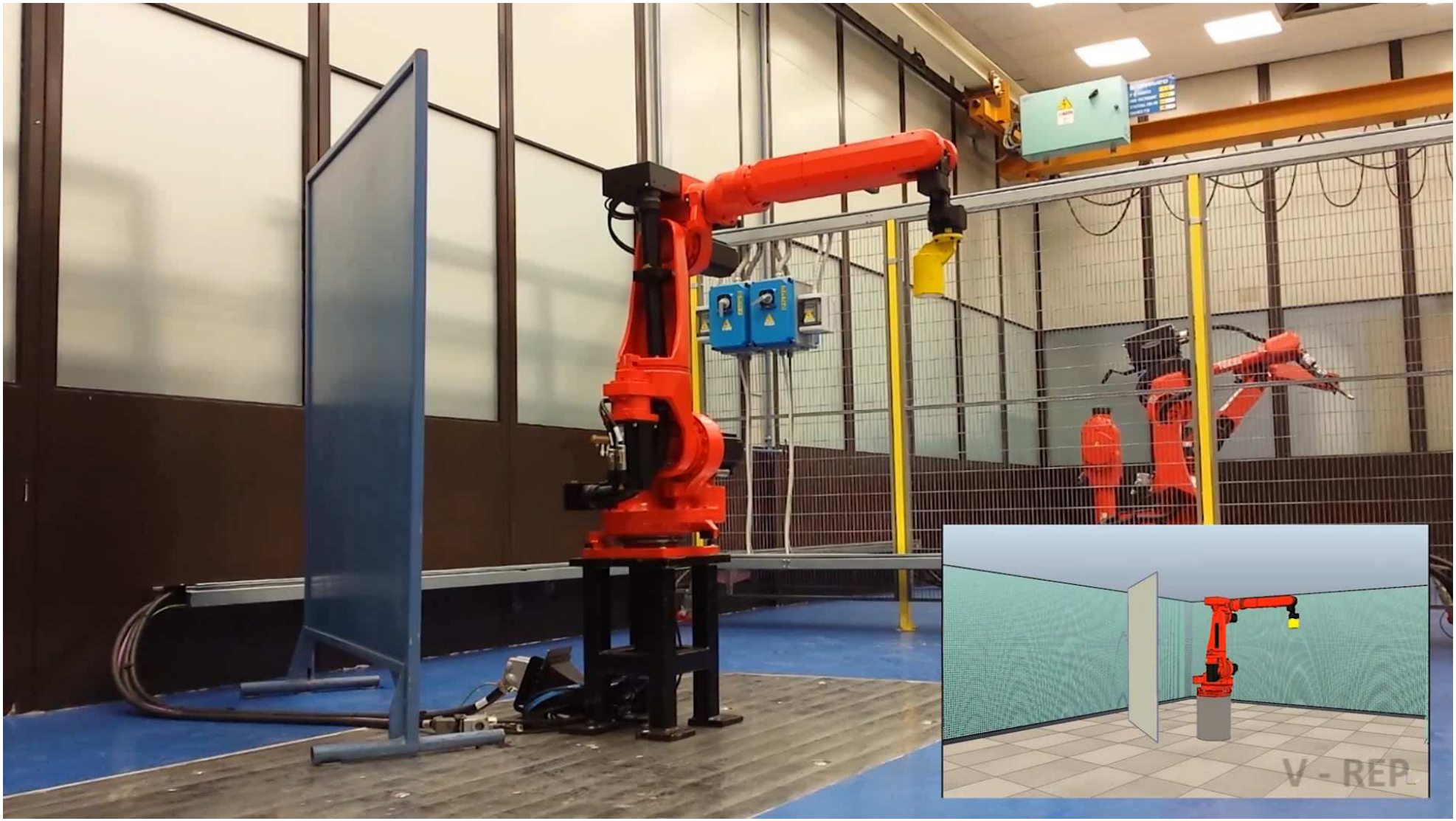
https://www.youtube.com/watch?v=VHfx4unIASM