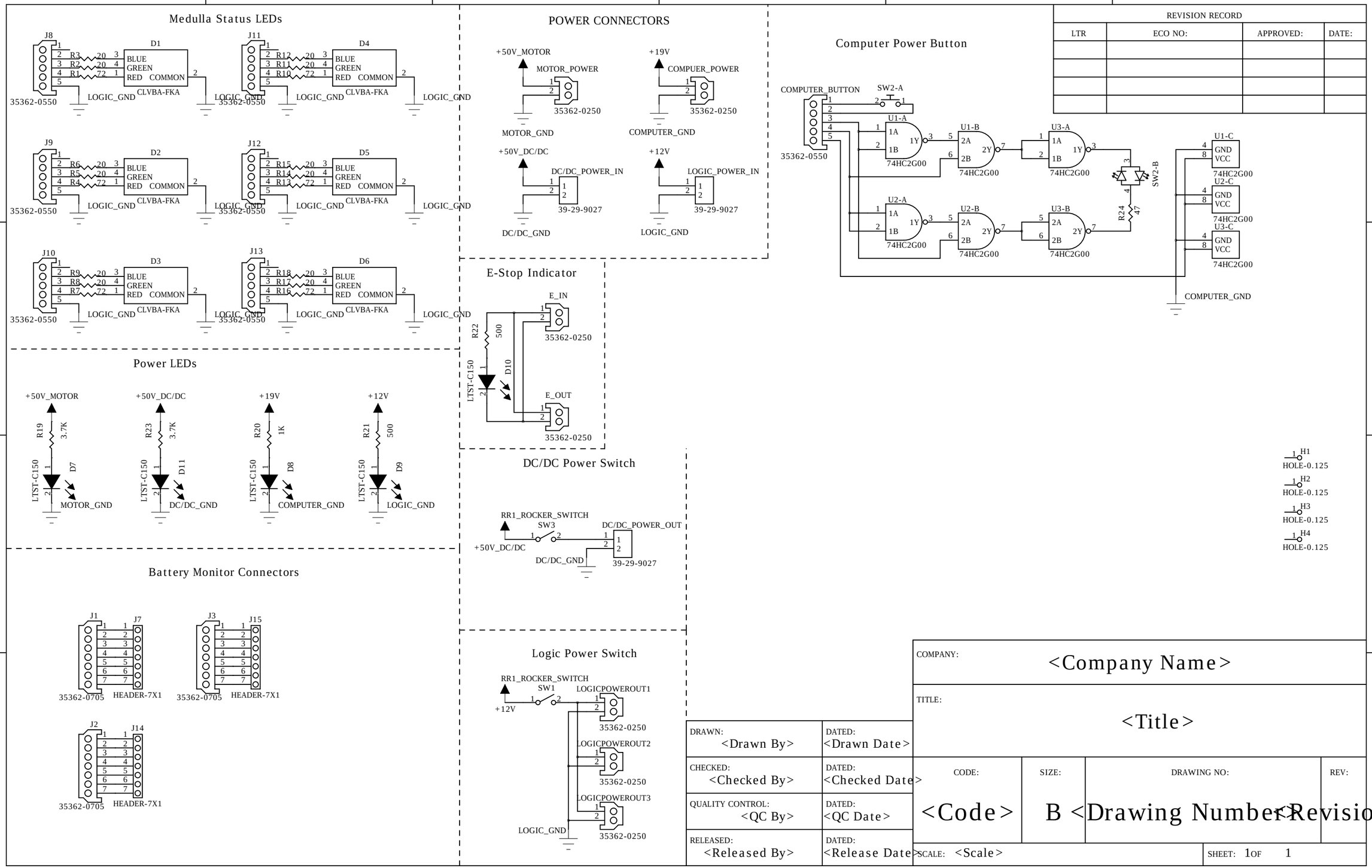
Medulla Status LEDs
J8
J9
J10
J11
J12
J13
D1
D2
D3
D4
D5
D6
BLUE
GREEN
RED COMMON
CLVBA-FKA
35362-0550
LOGIC_GND
R3 R2 R1
R6 R5 R4
R9 R8 R7
R12 R11 R10
R15 R14 R13
R18 R17 R16
POWER CONNECTORS
+50V_MOTOR
MOTOR_POWER
35362-0250
MOTOR_GND
+19V
COMPUER_POWER
COMPUTER_GND
+50V_DC/DC
DC/DC_POWER_IN
39-29-9027
DC/DC_GND
+12V
LOGIC_POWER_IN
Computer Power Button
COMPUTER_BUTTON
SW2-A
U1-A
U1-B
U2-A
U2-B
U3-A
U3-B
U1-C
U2-C
U3-C
1A
1B
1Y
2A
2B
2Y
GND
VCC
74HC2G00
SW2-B
R24
47
COMPUTER_GND
E-Stop Indicator
E_IN
E_OUT
R22
500
LTST-C150
D10
Power LEDs
+50V_MOTOR
+50V_DC/DC
+19V
+12V
R19 3.7K
R23 3.7K
R20 1K
R21 500
D7
D11
D8
D9
MOTOR_GND
DC/DC_GND
COMPUTER_GND
LOGIC_GND
DC/DC Power Switch
RR1_ROCKER_SWITCH
SW3
DC/DC_POWER_OUT
Battery Monitor Connectors
J1
J7
J3
J15
J2
J14
35362-0705
HEADER-7X1
Logic Power Switch
SW1
LOGICPOWEROUT1
LOGICPOWEROUT2
LOGICPOWEROUT3
H1
H2
H3
H4
HOLE-0.125
REVISION RECORD
LTR
ECO NO:
APPROVED:
DATE:
DRAWN: <Drawn By>
DATED: <Drawn Date>
CHECKED: <Checked By>
DATED: <Checked Date>
QUALITY CONTROL: <QC By>
DATED: <QC Date>
RELEASED: <Released By>
DATED: <Release Date>
COMPANY: <Company Name>
TITLE: <Title>
CODE: <Code>
SIZE: B
DRAWING NO: <Drawing Number>
REV: <Revision>
SCALE: <Scale>
SHEET: 1 OF 1