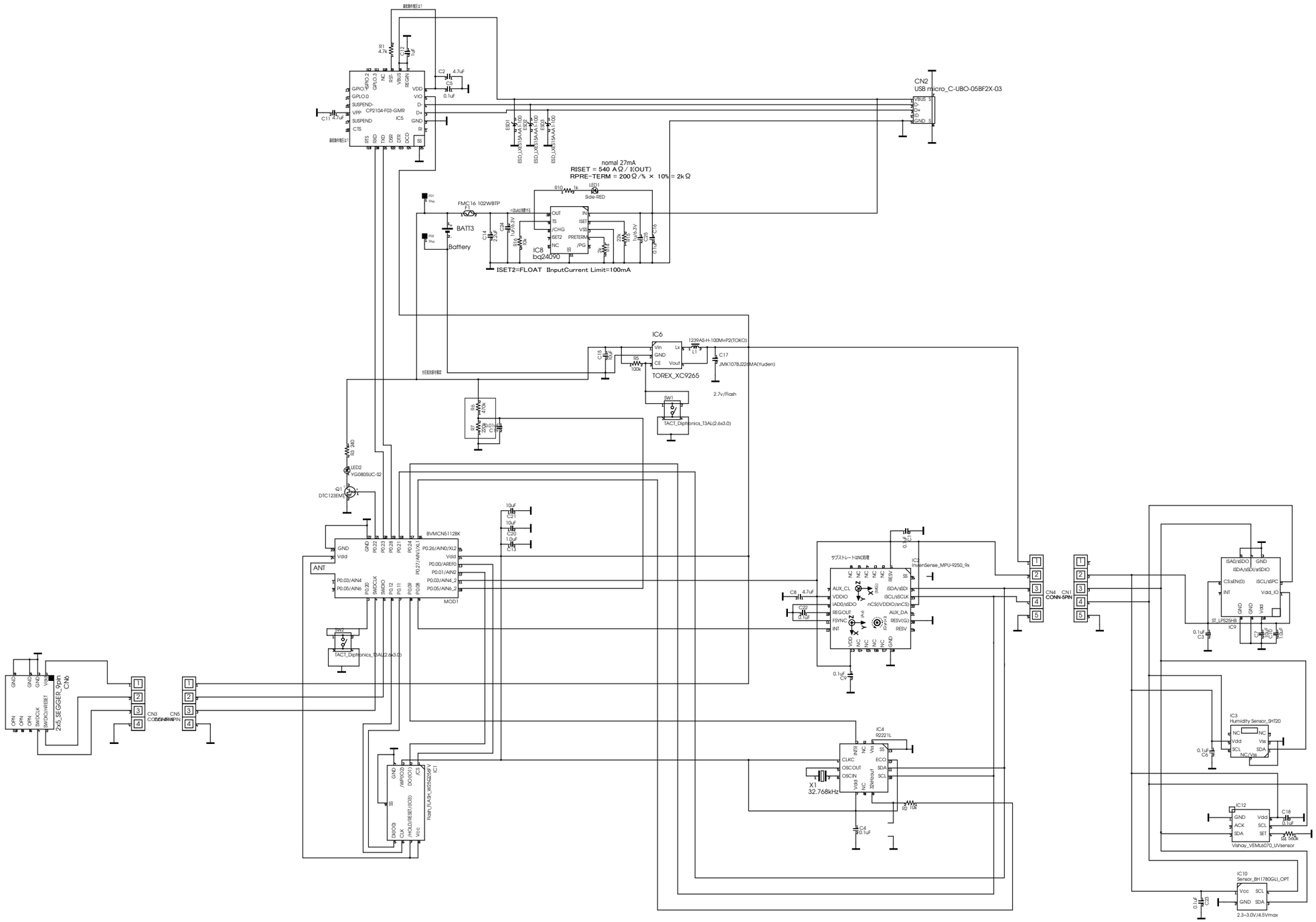

Revision	Issued Date	Detail of Modification	Design	Check	Approval	Release	Model Number	Company Name
Rev1.0	2015,Mar,3	Released					BV	Braveridge Co., LTd.
Rev3.1	2015,Nov,23	Final					Project Name	
							Multi-Sensing Monitor	