Binary Codes

- In the coding, when numbers, letters or words are represented by a specific group of symbols.
- The group of symbols is called as a code.
- The digital data is represented, stored and transmitted as group of binary bits.
- This group is also called as **binary code**.
- The binary code is represented by the number as well as alphanumeric letter.

Advantages of Binary Code

- Binary codes are suitable for the computer applications.
- Binary codes are suitable for the digital communications.
- Binary codes make the analysis and designing of digital circuits if we use the binary codes.
- Since only 0 & 1 are being used, implementation becomes easy.

Classification of binary codes

The codes are broadly categorized into following four categories:

- Weighted Codes
- Non-Weighted Codes
- Binary Coded Decimal Code
- Alphanumeric Codes
- Error Detecting Codes
- Error Correcting Codes

Weighted Codes

- Weighted binary codes are those binary codes which obey the positional weight principle.
- Each position of the number represents a specific weight. Several systems of the codes are used to express the decimal digits 0 through 9.
- In these codes each decimal digit is represented by a group of four bits.

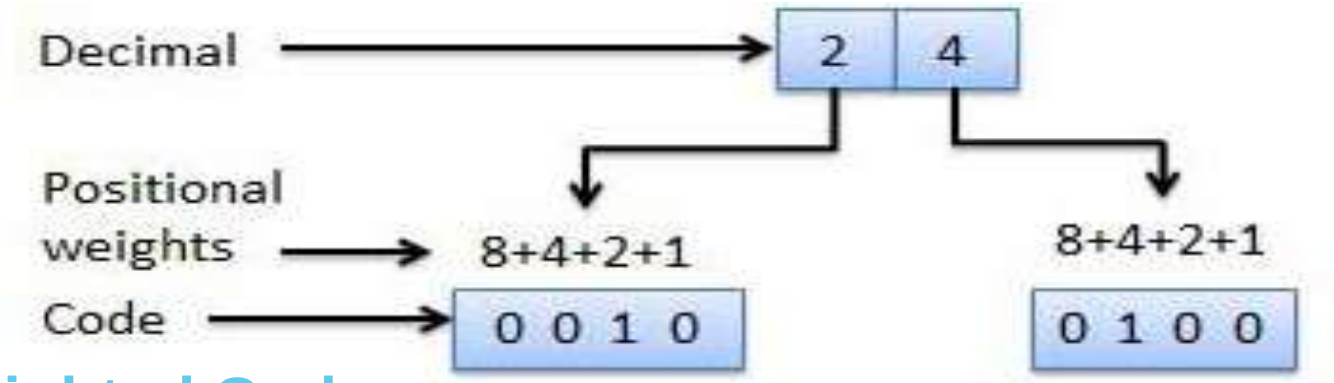

Non-Weighted Codes

In this type of binary codes, the positional weights are not assigned. The examples of non-weighted codes are Excess-3 code and Gray code.

Excess-3 code

- The Excess-3 code is also called as XS-3 code.
-
- It is non-weighted code used to express decimal numbers.
- The Excess-3 code words are derived from the 8421 BCD code words adding $(0011)_2$ or (3)10 to each code word in 8421.
- The excess-3 codes are obtained as follows –

$$\text{Decimal Number} \longrightarrow \text{8421 BCD} \xrightarrow[0011]{\text{Add}} \text{Excess-3}$$

Example:

Decimal	BCD 8 4 2 1	Excess-3 BCD + 0011
0	0 0 0 0	0 0 1 1
1	0 0 0 1	0 1 0 0
2	0 0 1 0	0 1 0 1
3	0 0 1 1	0 1 1 0
4	0 1 0 0	0 1 1 1
5	0 1 0 1	1 0 0 0
6	0 1 1 0	1 0 0 1
7	0 1 1 1	1 0 1 0
8	1 0 0 0	1 0 1 1
9	1 0 0 1	1 1 0 0

Gray Code

- It is the non-weighted code and it is not arithmetic codes.
- That means there are no specific weights assigned to the bit position.
- It has a very special feature that, only one bit will change each time the decimal number is incremented as shown in fig.
- As only one bit changes at a time, the gray code is called as a unit distance code.
- The gray code is a cyclic code. Gray code cannot be used for arithmetic operation.

Application of Gray code

- Gray code is popularly used in the shaft position encoders.
- A shaft position encoder produces a code word which represents the angular position of the shaft.

Note: A shaft encoder, also known as a rotatory encoder, is a device that reports the rotational angle of its shaft.

Shaft encoders are often used in robotic applications, computer mice and industrial controls.

They are also frequently used in machine tool changers, camera lenses and telescopes.

Binary to Gray conversion :

- The Most Significant Bit (MSB) of the gray code is always equal to the MSB of the given binary code.
- Other bits of the output gray code can be obtained by XORing binary code bit at that index and previous index.

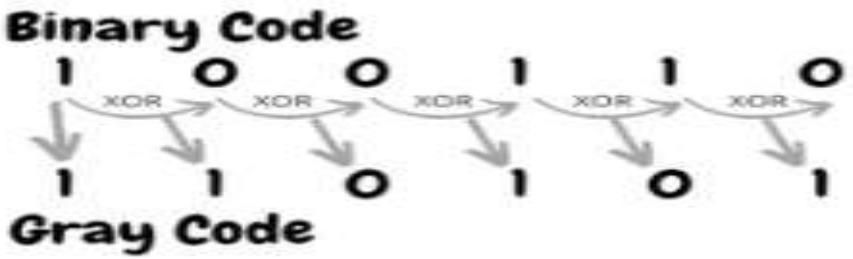

Gray to Binary conversion:

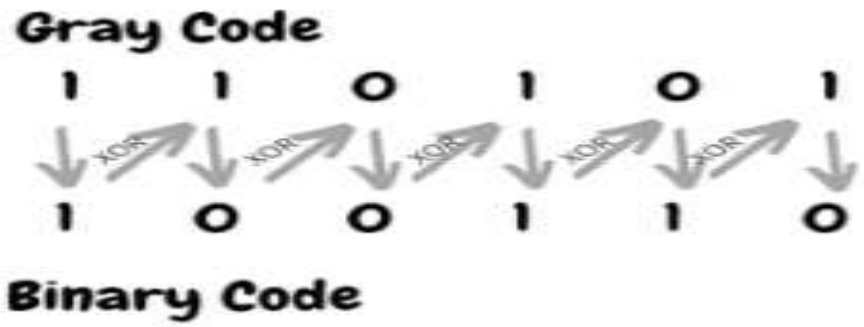

Gray code table

Decimal	BCD	Gray
0	0 0 0 0	0 0 0 0
1	0 0 0 1	0 0 0 1
2	0 0 1 0	0 0 1 1
3	0 0 1 1	0 0 1 0
4	0 1 0 0	0 1 1 0
5	0 1 0 1	0 1 1 1
6	0 1 1 0	0 1 0 1
7	0 1 1 1	0 1 0 0
8	1 0 0 0	1 1 0 0
9	1 0 0 1	1 1 0 1

Binary Coded Decimal (BCD) code

- In this code each decimal digit is represented by a 4-bit binary number.
- BCD is a way to express each of the decimal digits with a binary code.
- In the BCD, with four bits we can represent sixteen numbers (0000 to 1111).
- But in BCD code only first ten of these are used (0000 to 1001). The remaining six code combinations i.e. 1010 to 1111 are invalid in BCD.

Decimal	0	1	2	3	4	5	6	7	8	9
BCD	0000	0001	0010	0011	0100	0101	0110	0111	1000	1001

- **Advantages of BCD Codes**
- It is very similar to decimal system.
- We need to remember binary equivalent of decimal numbers 0 to 9 only.

- **Disadvantages of BCD Codes**
- The addition and subtraction of BCD have different rules.
- The BCD arithmetic is little more complicated.
- BCD needs more number of bits than binary to represent the decimal number. So BCD is less efficient than binary.

Extended Binary Coded Decimal Interchange Code(EBCIDIC)

- Extended binary coded decimal interchange code (EBCDIC) is an 8-bit binary code for numeric and alphanumeric characters.
- It was developed and used by IBM.
- EBCDIC was developed to enhance the existing capabilities of binary-coded decimal code.
- EBCDIC mainly used on IBM mainframe operating systems.
- The EBCDIC code allows for 256 different characters.
- Setting the first 4-bits to all-ones,1111, defines the character as a number, and the next 4-bits defines which number is encoded.
- For character A to I setting first four bits(nibble) to 1100, J to R is 1101, S to z is 1110.
- EX: 1 in decimal is 1111 0001, A is 1100 0001 and so on.

ASCII Code

- The ASCII stands for American Standard Code for Information Interchange.
- The ASCII code is an alphanumeric code used for data communication in digital computers.
- The ASCII is a 7-bit code capable of representing 2^7 or 128 number of different characters.
- First 31(0 to 30) is for control characters such as unprintable like printers etc.
- Codes 32 to 127 are for printable characters like letters, digits, punctuation marks.
- Ex: 32 for space, 33 for !, 34 for “ , 65 to 90(A to Z), 97 to 122(a to z), 48 to 57(0 to 9) etc

Fixed and floating point data representation

- **Fixed point representation**
- In computing, fixed-point number representation is a real data type for a number.
- With the help of fixed number representation, data is converted into binary form, and then data is processed, stored and used by the system.
- Fixed point representation of data

To write the number 4.5 in Fixed-point notation

Step 1:- Convert the number into binary form.

4.5 = 100.1

Step 2:- Represent binary number in Fixed point notation

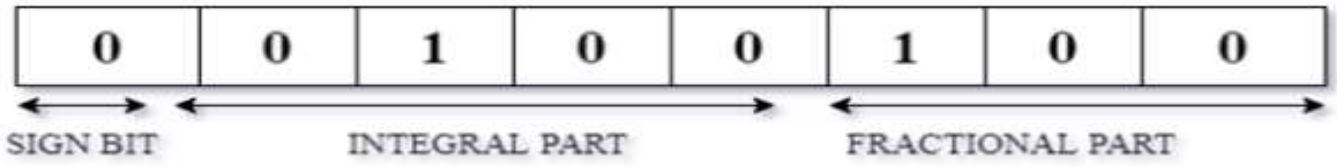

Floating-point representation:

- The description of binary numbers in the exponential form is called floating-point representation.
- The floating-point representation breaks the number into two parts.
- The left-hand side is a signed, fixed-point number known as a mantissa.
- The right-hand side of the number is known as the exponent.
- The general structure of floating-point representation of a binary number

is mantissa*$2^{Exponent}$.

- Ex: $-53.5=(-110101.1)_2=(-1.101011)x2^5$

Structure of Computer

Definition:

A computer can be defined as a fast electronic calculating machine that accepts the (data). Digitized input information, process it as per the list of internally stored instructions and produces the resulting information.

Note:

List of instructions are called programs & internal storage is called computer memory.

Types of computer

The different types of computers are:

- 1. Personal computers: - This is the most common type found in homes, schools, Business offices etc., It is the most common type of desk top computers with processing and storage units along with various input and output devices.
- 2. Note book computers: - These are compact and portable versions of PC
- 3. Work stations: - These have high resolution input/output (I/O) graphics capability, but with same dimensions as that of desktop computer. These are used in engineering applications of interactive design work.
- 4. Enterprise systems: - These are used for business data processing in medium to large corporations that require much more computing power and storage capacity than work stations. Internet associated with servers have become a dominant worldwide source of all types of information.
- 5. Super computers: - These are used for large scale numerical calculations required in the applications like weather forecasting etc.,

Functional units

- A computer consists of five functionally independent main parts input, memory, arithmetic logic unit (ALU), output and control unit.

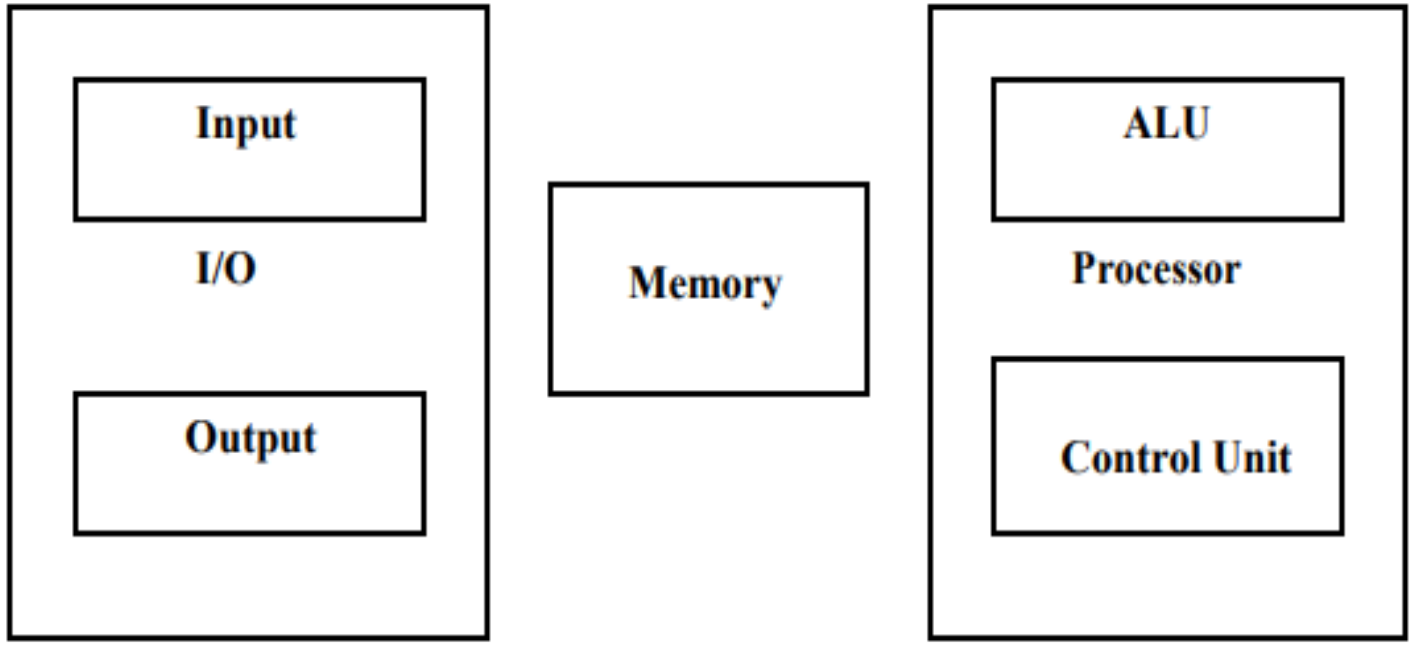

Input Unit

- Input device accepts the coded information as source program i.e. high level language.
- This is either stored in the memory or immediately used by the processor to perform the desired operations.
- The source program/high level language program/coded information/simply data is fed to a computer through input devices keyboard is a most common type.
- Whenever a key is pressed, one corresponding word or number is translated into its equivalent binary code over a cable & fed either to memory or processor.
- EX: Joysticks, trackballs, mouse, scanners etc

Memory unit:

- Its function is to store programs and data.

- It is basically to two types

  - 1. Primary memory

    Examples: RAM, ROM

  - 2. Secondary memory

    Examples: - Magnetic disks & tapes, optical disks (ie CD-ROM's), floppies etc.,

Primary Memory

- Is the one exclusively associated with the processor and operates at the electronics speeds.
- programs must be stored in this memory while they are being executed.
- The memory contains a large number of semiconductors storage cells.
- Each capable of storing one bit of information.
- To provide easy access to a word in memory, a distinct address is associated with each word location.
- Addresses are numbers that identify memory location.
- The time required to access one word in called memory access time.
- Caches are the small fast RAM units, which are coupled with the processor and it tends to be expensive.

Secondary memory:

- Is used where large amounts of data & programs have to be stored, particularly information that is accessed in frequently.

Arithmetic logic unit (ALU):

- Most of the computer operators are executed in ALU of the processor like addition, subtraction, division, multiplication, etc.
- The operands are brought into the ALU from memory and stored in high speed storage elements called register.
- Then according to the instructions the operation is performed in the required sequence.
- The control and the ALU are many times faster than other devices connected to a computer system.
- This enables a single processor to control a number of external devices such as key boards, displays, magnetic and optical disks, sensors and other mechanical controllers.

Output unit:

- These actually are the counterparts of input unit.
- Its basic function is to send the processed results to the outside world.
- Examples:- Printer, speakers, monitor etc.

Control unit:

- It is effectively acts as the nerve center that sends signals to other units and senses their states.
- The actual timing signals that govern the transfer of data between input unit, processor, memory and output unit are generated by the control unit.

Basic operational concepts

- To perform a given task an appropriate program consisting of a list of instructions is stored in the memory.
- Individual instructions are brought from the memory into the processor, which executes the specified operations.
- Data to be stored are also stored in the memory
- Examples: - Add LOCA, R0

This instruction requires the performance of several steps,

- First the instruction is fetched from the memory into the processor.
- The operand at LOCA is fetched and added to the contents of R0
- Finally the resulting sum is stored in the register R0.
- The add instruction combines a memory access operation with an ALU Operations.

In some other type of computers, these two types of operations are performed by separate instructions for performance reasons.

- Load LOCA, R1
- Add R1, R0

Contd…

In addition to the ALU & the control circuitry, the processor contains a number of registers used for several different purposes.

- The instruction register (IR):- Holds the instructions that is currently being executed. Its output is available for the control circuits which generates the timing signals that control the various processing elements in one execution of instruction.
- The program counter PC:- This is another specialized register that keeps track of execution of a program. It contains the memory address of the next instruction to be fetched and executed.

The other two registers which facilitate communication with memory are: -

- 1. MAR – (Memory Address Register):- It holds the address of the location to be accessed.
- 2. MDR – (Memory Data Register):- It contains the data to be written into or read out of the address location.

Computer Organization:

- Computer Organization is concerned with the structure and behavior of a computer system as seen by the user.
- Computer Organization tells us how exactly all the units in the system are arranged and interconnected.
- An organization is done on the basis of architecture.
- Computer Organization deals with low-level design issues.
- Organization involves Physical Components (Circuit design, Adders, Signals, Peripherals)

Computer Architecture

- Computer Architecture is concerned with the way hardware components are connected together to form a computer system.
- It acts as the interface between hardware and software.
- Computer Architecture helps us to understand the functionalities of a system.
- A programmer can view architecture in terms of instructions, addressing modes and registers.
- Computer Architecture deals with high-level design issues.
- While designing a computer system architecture is considered first.
- Types of Computer Architecture:

There are two basic types of computer architecture

- Von Neumann architecture
- Harvard architecture

Cont….

Historically there have been 2 types of Computers:

- **Fixed Program Computers** – Their function is very specific and they couldn't be programmed, e.g. Calculators.
- **Stored Program Computers** – These can be programmed to carry out many different tasks, applications are stored on them, hence the name.
- The modern computers are based on a stored-program concept introduced by **John Von Neumann.**
- In this stored-program concept, programs and data are stored in a separate storage unit called memories and are treated the same.
- This novel idea meant that a computer built with this architecture would be much easier to reprogram.

Von-Neumann Architecture

It is having three basic units:

- The Central Processing Unit (CPU)
- The Main Memory Unit
- The Input/Output Device

Control Unit –

- A control unit (CU) handles all processor control signals.
- It directs all input and output flow, fetches code for instructions, and controls how data moves around the system.

Arithmetic and Logic Unit (ALU) –

- The arithmetic logic unit is that part of the CPU that handles all the calculations the CPU may need, e.g. Addition, Subtraction, Comparisons.
- It performs Logical Operations, Bit Shifting Operations, and Arithmetic operations.

Contd…

Main Memory Unit (Registers) –

- **Accumulator:** Stores the results of calculations made by ALU.
- **Program Counter (PC):** Keeps track of the memory location of the next instructions to be dealt with. The PC then passes this next address to Memory Address Register (MAR).
- **Memory Address Register (MAR):** It stores the memory locations of instructions that need to be fetched from memory or stored into memory.
- **Memory Data Register (MDR):** It stores instructions fetched from memory or any data that is to be transferred to, and stored in, memory.
- **Current Instruction Register (CIR):** It stores the most recently fetched instructions while it is waiting to be coded and executed.
- **Instruction Buffer Register (IBR):** The instruction that is not to be executed immediately is placed in the instruction buffer register IBR

Contd…

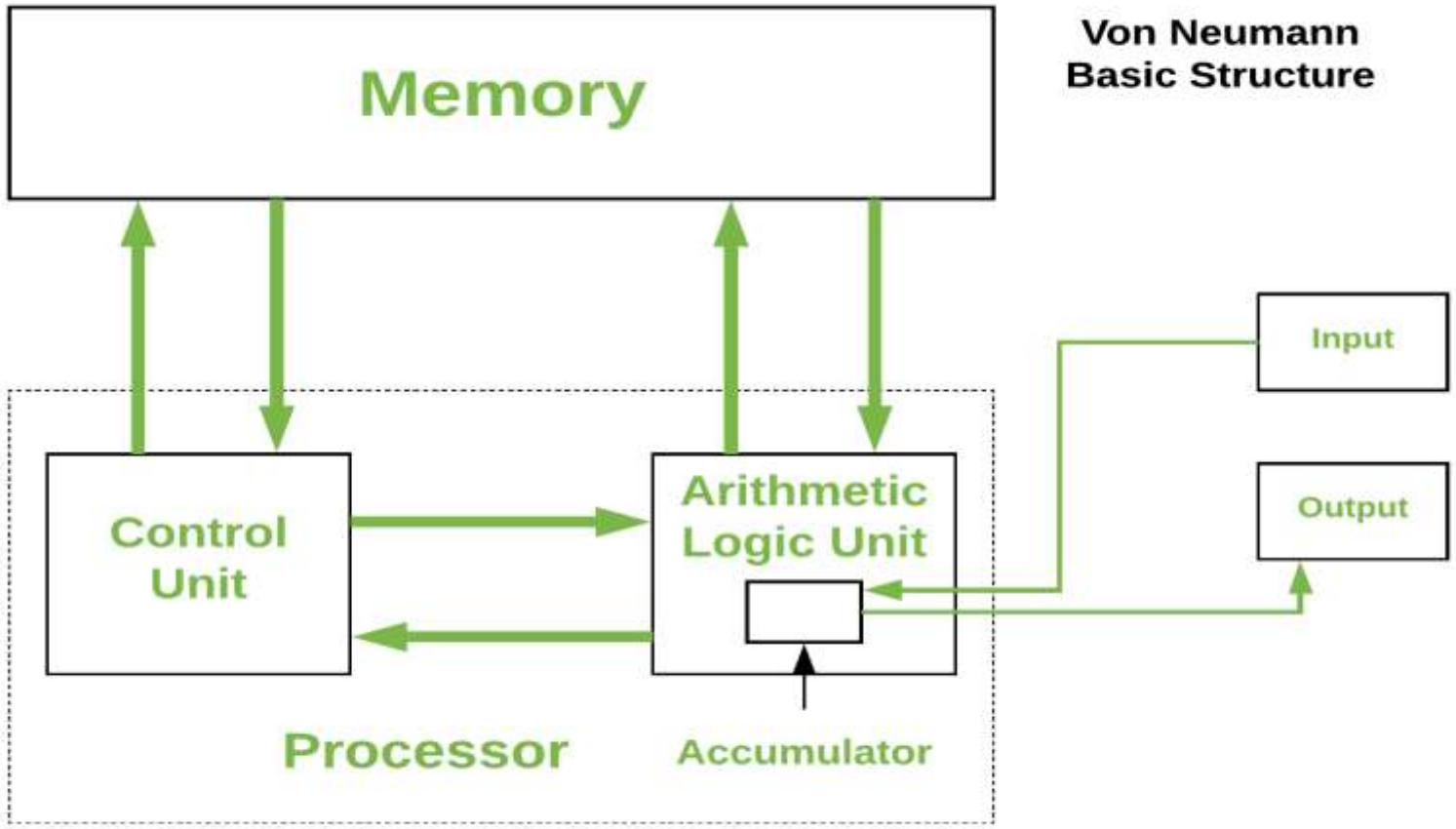
Memory
Von Neumann
Basic Structure
Input
Output
Control
Unit
Arithmetic
Logic Unit
Processor
Accumulator

Contd…

Input/Output Devices -

- Program or data is read into main memory from the input device or secondary storage under the control of CPU input instruction.
- *Output devices* are used to output the information from a computer.

Buses -

- Data is transmitted from one part of a computer to another, connecting all major internal components to the CPU and memory, by the means of Buses.
- Different types of buses are data bus, address bus, system bus.

.

Bus Structures

- Bus structures in computer plays important role in connecting the internal components of the computer.
- The bus in the computer is the *shared transmission medium*.
- This means multiple components or devices use the same bus structure to transmit the information signals to each other.

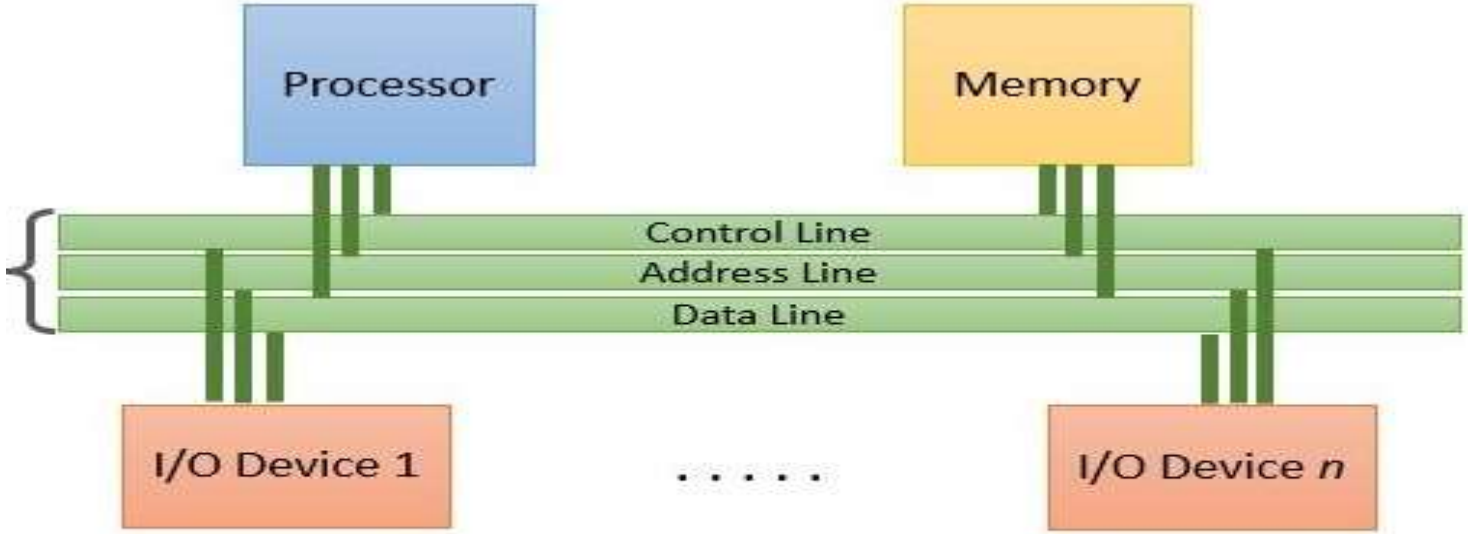

Bus Structure

Contd…

- A system bus has typically has fifty to hundreds of distinct lines where each line is meant for a certain function.
- These lines can be categorise into three functional groups i.e., data lines, address lines, and control lines.
- **Data Bus:** It carries data among the memory unit, the I/O devices, and the processor.
- **Address Bus:** It carries the address of data (not the actual data) between memory and processor.
- **Control Bus:** It carries control commands from the CPU in order to control and coordinate all the activities within the computer.

Performance of computer

- The most important measure of the performance of a computer is how quickly it can execute programs.
- The speed with which a computer executes program is affected by the design of its hardware.
- For best performance, it is necessary to design the compilers, the machine instruction set, and the hardware in a coordinated way.
- The total time required to execute the program is elapsed time is a measure of the performance of the entire computer system.
- It is affected by the speed of the processor, the disk and the printer.
- The time needed to execute a instruction is called the processor time.
- Just as the elapsed time for the execution of a program depends on all units in a computer system.
- The processor time depends on the hardware involved in the execution of individual machine instructions.

Multiprocessor & Multicomputer:-

Multiprocessor:

- A Multiprocessor is a computer system with two or more central processing units (CPUs) share full access to a common RAM.
- The main objective of using a multiprocessor is to boost the system's execution speed, with other objectives being fault tolerance and application matching.
- There are two types of multiprocessors, one is called shared memory multiprocessor and another is distributed memory multiprocessor.
- In shared memory multiprocessors, all the CPUs shares the common memory but in a distributed memory multiprocessor, every CPU has its own private memory.

- Note:Fault tolerance is a process that enables an operating system to respond to a failure in hardware or software. This fault-tolerance definition refers to the system's ability to continue operating despite failures or malfunctions.

Contd…

- **Benefits of using a Multiprocessor –**
- Enhanced performance.
- Multiple applications.
- Multi-tasking inside an application.
- High throughput and responsiveness.
- Hardware sharing among CPUs.

Multicomputer:

- Multicomputer is a computer system with multiple processors that are connected together to solve a problem.
- Each processor has its own memory and it is accessible by that particular processor and those processors can communicate with each other via an interconnection network.
- As the multicomputer is capable of messages passing between the processors, it is possible to divide the task between the processors to complete the task.
- Hence, a multicomputer can be used for distributed computing.
- It is cost effective and easier to build a multicomputer than a multiprocessor.

Difference between multiprocessor and Multicomputer:

- Multiprocessor is a system with two or more central processing units (CPUs) that is capable of performing multiple tasks where as a multicomputer is a system with multiple processors that are attached via an interconnection network to perform a computation task.
- A multiprocessor system is a single computer that operates with multiple CPUs where as a multicomputer system is a cluster of computers that operate as a singular computer.
- Construction of multicomputer is easier and cost effective than a multiprocessor.
- In multiprocessor system, program tends to be easier where as in multicomputer system, program tends to be more difficult.
- Multiprocessor supports parallel computing, Multicomputer supports distributed computing.

Contd…

- Parallel Computing:
  In parallel computing multiple processors performs multiple tasks assigned to them simultaneously. Memory in parallel systems can either be shared or distributed. Parallel computing provides concurrency and saves time and money.

- Distributed Computing:
  In distributed computing we have multiple autonomous computers which seems to the user as single system. In distributed systems there is no shared memory and computers communicate with each other through message passing. In distributed computing a single task is divided among different computers.

Combinational Circuits

- The combinational logic circuits are the circuits that contain different types of logic gates. Simply, a circuit in which different types of logic gates are combined is known as a **combinational logic circuit**.
- The output of the combinational circuit is determined from the present combination of inputs, regardless of the previous input.
- The input variables, logic gates, and output variables are the basic components of the combinational logic circuit.
- There are different types of combinational logic circuits, such as Adder, Subtractor, Decoder, Encoder, Multiplexer, and De-multiplexer.

Contd…

There are the following characteristics of the combinational logic circuit:

- At any instant of time, the output of the combinational circuits depends only on the present input terminals.
- The combinational circuit doesn't have any backup or previous memory. The present state of the circuit is not affected by the previous state of the input.
- The n number of inputs and m number of outputs are possible in combinational logic circuits.

Block diagram of a combinational circuit

Half Adder

- Half adder is a combinational arithmetic circuit that adds two bits.
- It has two inputs, called A and B and produces a sum bit (s) and carry bit (c) both as output.
- It does not take carry from previous sum.
- The adder works by combining the operations of basic logic gates, with the simplest form using only a XOR and an AND gate.
- This can also be converted into a circuit that only has AND, OR and NOT gates.
- This might result in a bigger circuit since three different chips are used instead of just one.
- Block diagram of half adder is:

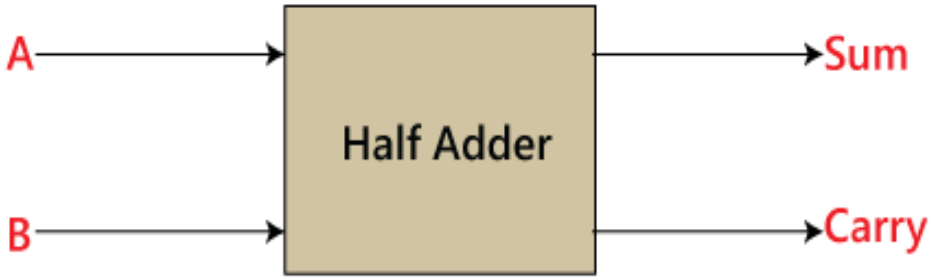

Contd…

- Truth table is:

A (input)	B (input)	C (output)	S (output)
0	0	0	0
1	0	0	1
0	1	0	1
1	1	1	0

- From the truth table logical expression can be : $S=A \oplus B$ and $C=A.B$
- Half-Adder logical circuit:

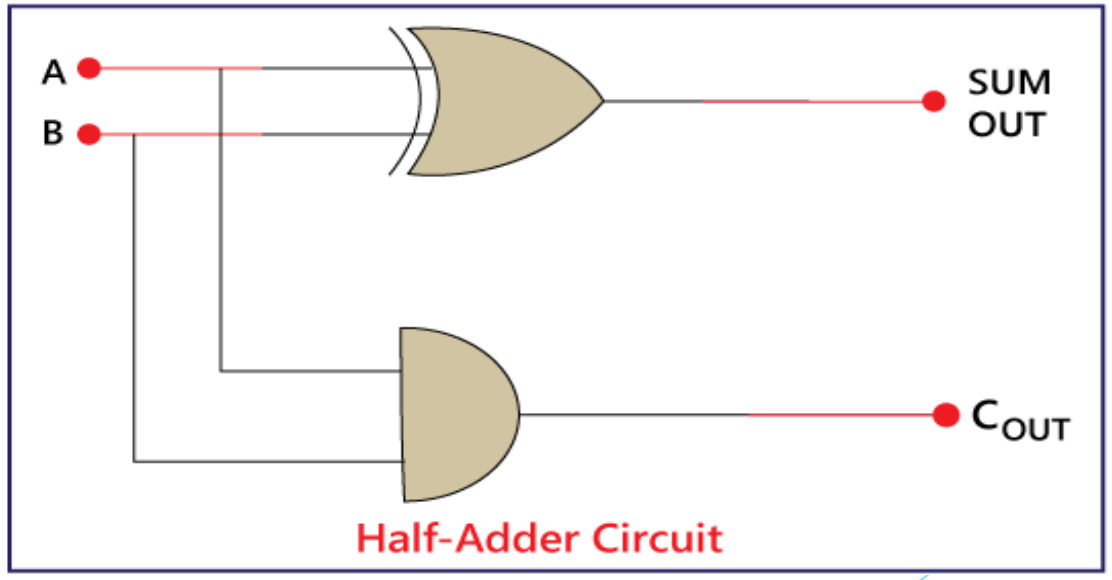

Full adder

- Full Adder is the adder that adds three inputs and produces two outputs.
- The first two inputs are A and B and the third input is an input carry as C-IN.
- The output carry is designated as C-OUT and the normal output is designated as S which is SUM.
- A full adder logic is designed in such a manner that can take eight inputs together to create a byte-wide adder and cascade the carry bit from one adder to another.
- Block diagram:

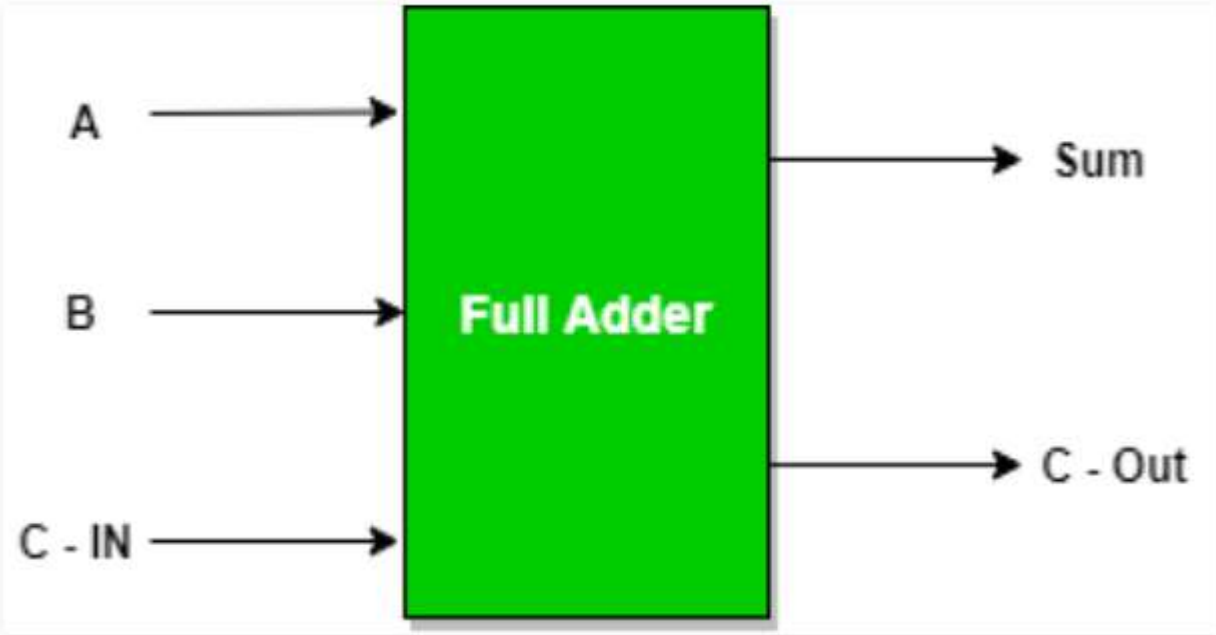

Contd…

- Full adder Truth Table:

Inputs			Outputs	
A	B	C – IN	Sum	C - Out
0	0	0	0	0
0	0	1	1	0
0	1	0	1	0
0	1	1	0	1
1	0	0	1	0
1	0	1	0	1
1	1	0	0	1
1	1	1	1	1

Contd…

- Logical Expression for SUM:

= A’ B’ C-IN + A’ B C-IN’ + A B’ C-IN’ + A B C-IN

= C-IN (A’ B’ + A B) + C-IN’ (A’ B + A B’)

= C-IN (A XOR B)’ + C – IN’ (A XOR B) (A’B + AB’ = A XOR B , AB + A’B’ = (A XOR B)’

= C-IN XOR (A XOR B)

= C- IN XOR A XOR B

- Logical Expression for C-OUT:

= A’ B C-IN + A B’ C-IN + A B C-IN’ + A B C-IN

= C- IN(A’ B +A B’) + AB(C-IN’ + C-IN)

= C – IN(A XOR B) + AB (C+C’=1)

Contd…

- Circuit Diagram:

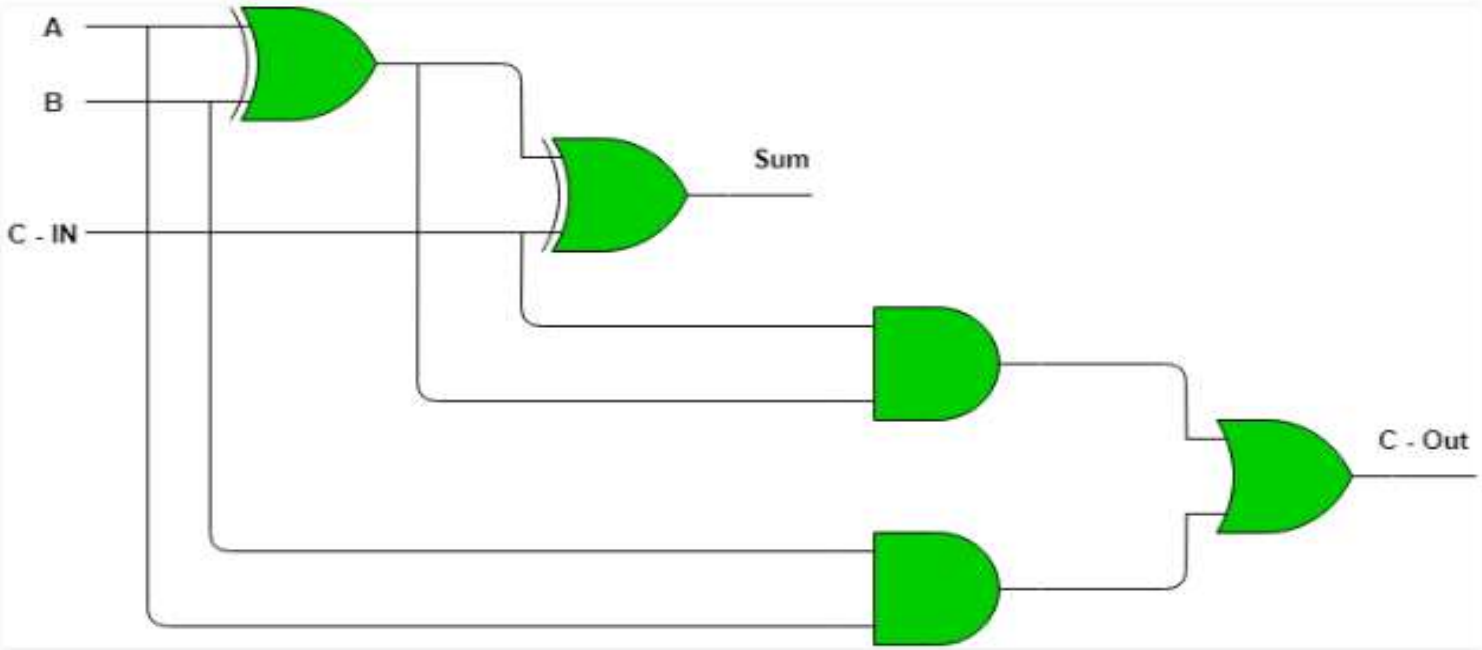

Full Adder logic circuit.

Sequential Circuits

- **Sequential circuit** is a combinational logic circuit that consists of inputs variable (X), logic gates (Computational circuit), and output variable (Z).
- A combinational circuit produces an output based on input variables only, but a **sequential circuit** produces an output based on **current input and previous output variables.**
- sequential circuits include memory elements that are capable of storing binary information.
- A **LATCH is** capable of storing one bit of information.
- Block Diagram:

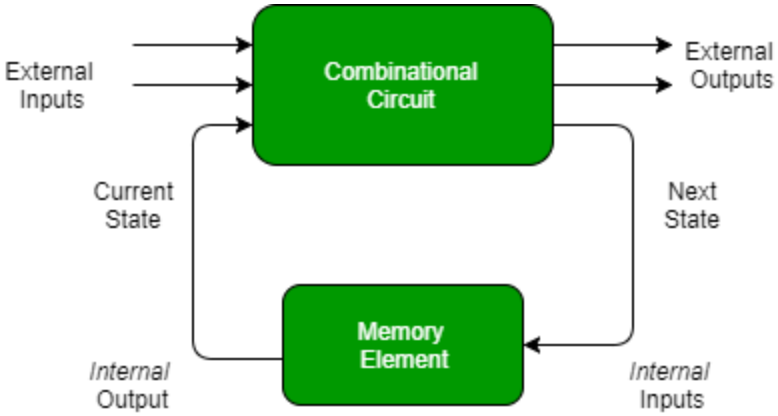

Figure: Sequential Circuit

Contd…

Types of Sequential Circuits:

- Asynchronous sequential circuit: These circuits **do not use a clock signal** but uses the pulses of the inputs. These circuits are **faster** than synchronous sequential circuits. But these circuits are more **difficult** to design and their output is **uncertain**. Ex: Latches
- Synchronous sequential circuit: These circuits **uses clock signal** and level inputs. The output pulse is the same duration as the clock pulse for the clocked sequential circuits. Since they wait for the next clock pulse to arrive to perform the next operation, so these circuits are bit **slower** compared to asynchronous. Level output changes state at the start of an input pulse and remains in that until the next input or clock pulse.

Note: clock signal consists of an indefinite series of pulses.

A pulse is sudden change in signal level, in a digital signal from low to high or vice versa, and after some time a return to the original level.

Cont…

Latches:

- A **Latch** is a special type of logical circuit. The latches have **low** and **high** two stable states.
- Latches are basic storage elements that operate with signal levels.
- Latches controlled by a clock transition are flip-flops.
- Latches are useful for the design of the asynchronous sequential circuits.
- Flip flops that do not use clock pulse are referred to as latch.
- Latches are digital circuits that store a single bit of information and hold its value until it is updated by new input signals. They are used in digital systems as temporary storage elements to store binary information. Latches can be implemented using various digital logic gates, such as AND, OR, NOT, NAND, and NOR gates.

SR Latch

- The SR latch is a special type of asynchronous device which works separately for control signals. It depends on the S-states and R-inputs.
- The SR latch design by connecting two **NOR** gates with a cross loop connection.
- The SR latch can also be designed using the NAND gate. Below are the circuit diagram and the truth table of the SR latch.

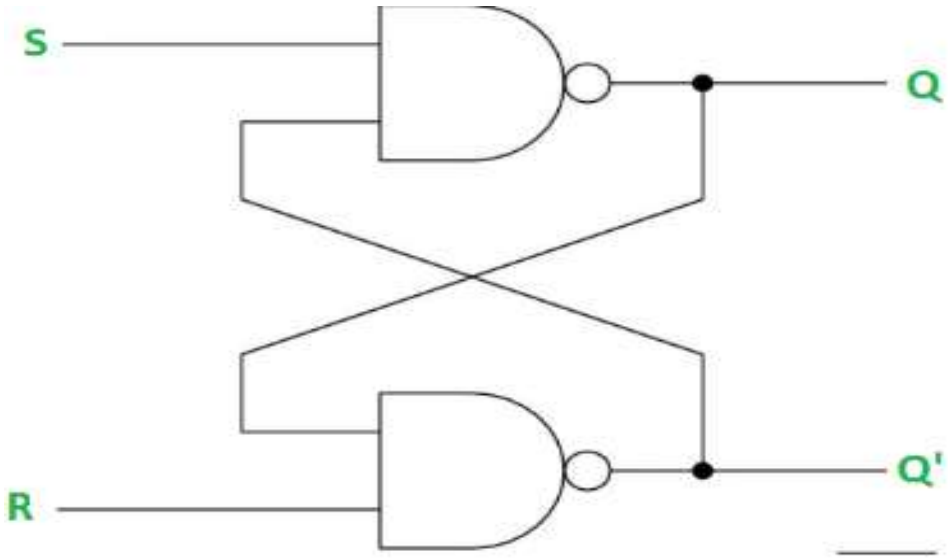

S	R	Q_n	Q_{n+1}
0	0	x	Indeterminate
0	1	x	1 set
1	0	x	0 reset
1	1	x	Q_n No change

SR Flipflop

- Two types of clocked SR flip – flops are possible: based on NAND and based on NOR.
- The circuit of clocked SR flip – flop using NAND gates and truth table is shown below

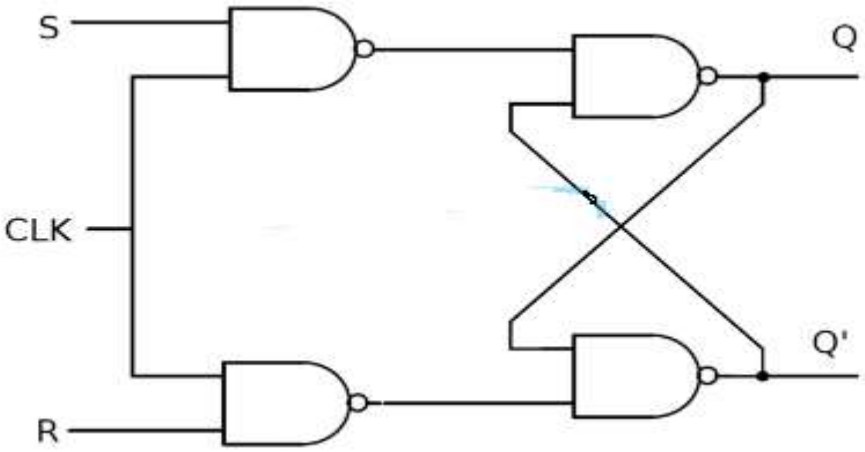

Clock	S	R	Q_{n+1}
Not Triggered	x	X	Q_n
Triggered	0	0	Q_n No change
Triggered	0	1	0 reset
Triggered	1	0	1 set
Triggered	1	1	Indeterminate

Contd…

- This simple clocked RS flip-flop circuit has a set input (S) and a reset input (R).
- Flipflop changes the state only when clock pulse is applied depending on the input.
- SR flipflop when S=0 and R=1, it goes to reset state, when S=1 and R=0 it goes to set sate.
- When S=0 and R=0 output will be in previous sate.When both S and R is 1 output is invalid.
- SR flip – flops are very simple circuits but are not widely used in practical circuits because of their illegal state, where both S and R are high (S = R = 1).
- But they are used in switching circuits as they provide simple switching function.

JK Flipflop

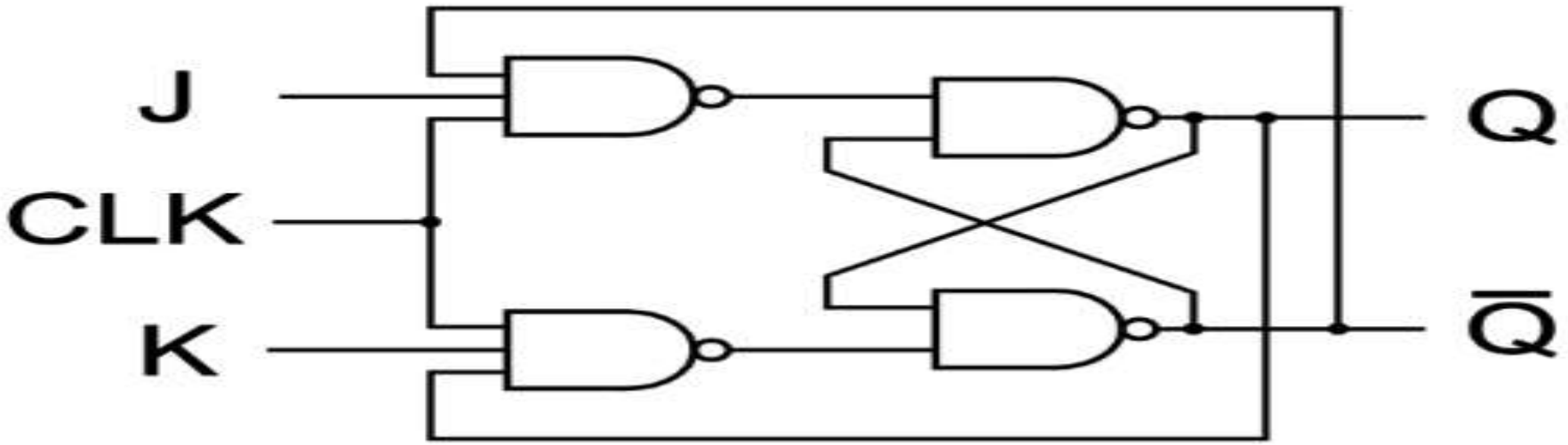

- To overcome these two fundamental design problems with the SR flip-flop design, the JK flip Flop was developed.
- This simple JK flip Flop is the most widely used of all the flip-flop designs and is considered to be a universal flip-flop circuit.
- The two inputs labelled “J” and “K” autonomous letters chosen by its inventor Jack Kilby.
- The JK flip flop is basically a gated SR flip-flop with the addition of a clock input circuitry that prevents the illegal or invalid output condition that can occur when both inputs S and R are equal to logic level “1”.

Truth table of JK flipflop

Truth Table

J	K	CLK	Q
0	0	↑	Q_0 (no change)
1	0	↑	1
0	1	↑	0
1	1	↑	$\overline{Q}_0$ (toggles)

D Flipflop

- The D flip-flop is a clocked flip-flop with a single digital input ‘D’.
- Each time a D flip-flop is clocked, its output follows the state of ‘D’.
- The D Flip Flop has only two inputs D and CP.
- The D inputs go precisely to the S input and its complement is used to the R input.
- The logic symbol for the D flip-flop is shown in the figure.

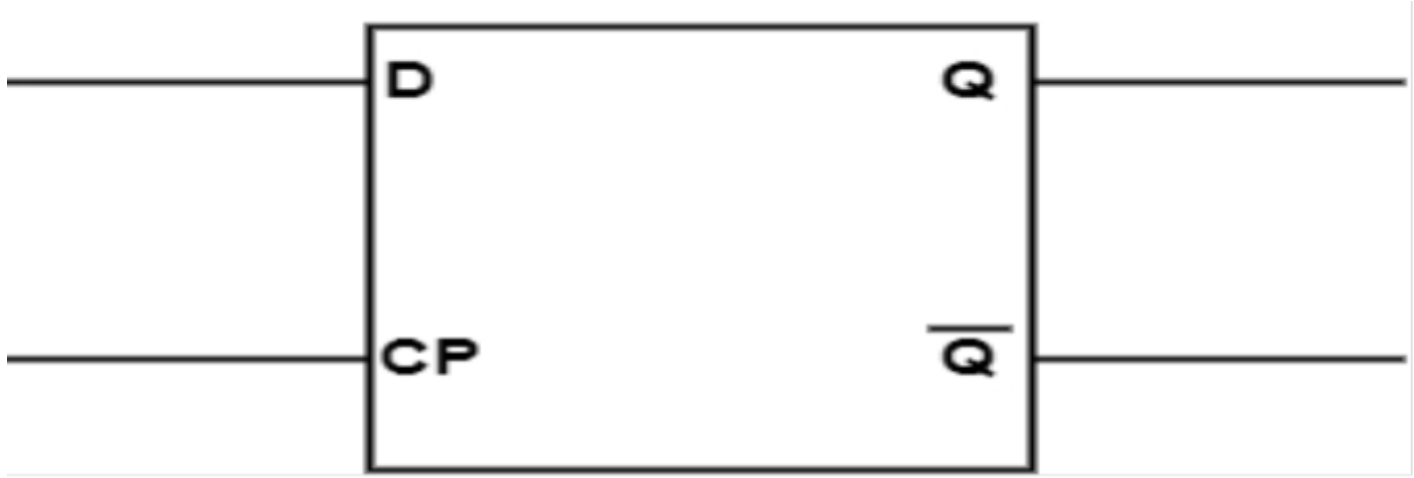

Contd…

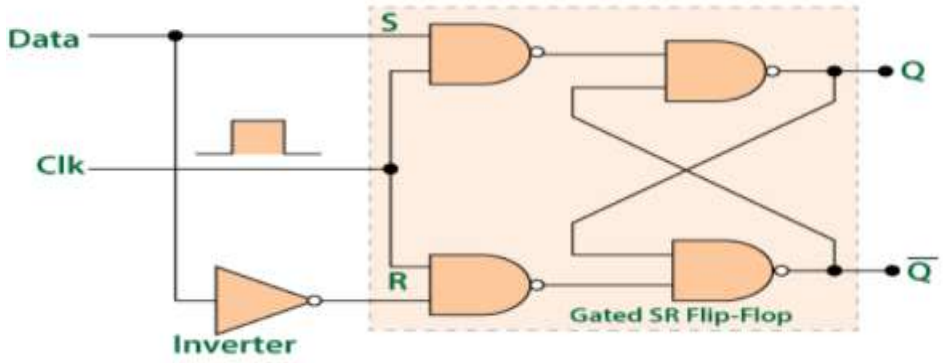

- In SR flip flop, when both the inputs are 0, that state is no longer possible. It is an ambiguity that is removed by the complement in D-flip flop.
- In D flip flop, the single input "D" is referred to as the "Data" input.
- When the clock input is set to 1, the "set" and "reset" inputs of the flip-flop are both set to 1.
- So it will not change the state and store the data present on its output before the clock transition occurred.
- In simple words, the output is "latched" at either 0 or 1.

Contd…

- Truth table of D flip flop:

Clock	D	Q	Q'	Description
↓ » 0	X	Q	Q'	Memory no change
↑ » 1	0	0	1	Reset Q » 0
↑ » 1	1	1	0	Set Q » 1

T Flipflop

- In T flip flop, "T" defines the term "Toggle".
- we can construct the "T Flip Flop" by making changes in the "JK Flip Flop".
- The "T Flip Flop" has only one input, which is constructed by connecting the input of JK flipflop.
- This single input is called T. In simple words, we can construct the "T Flip Flop" by converting a "JK Flip Flop".
- Sometimes the "T Flip Flop" is referred to as single input "JK Flip Flop".
- Block diagram of T flip flop:

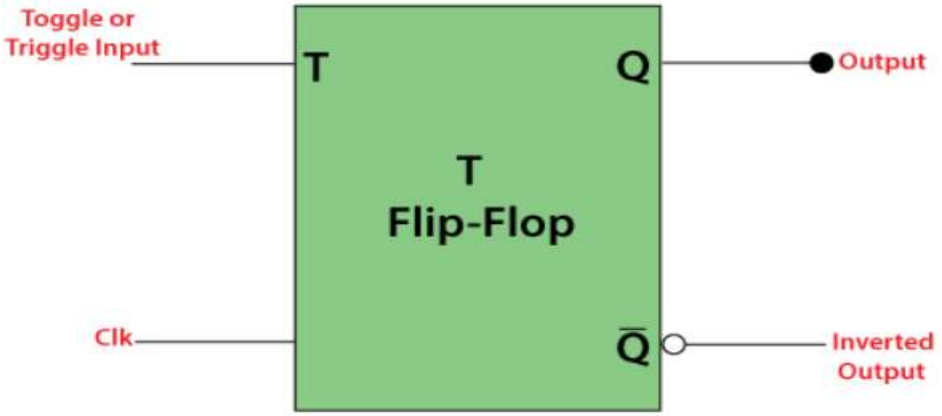

Contd…

- Circuit diagram of T flip flop:

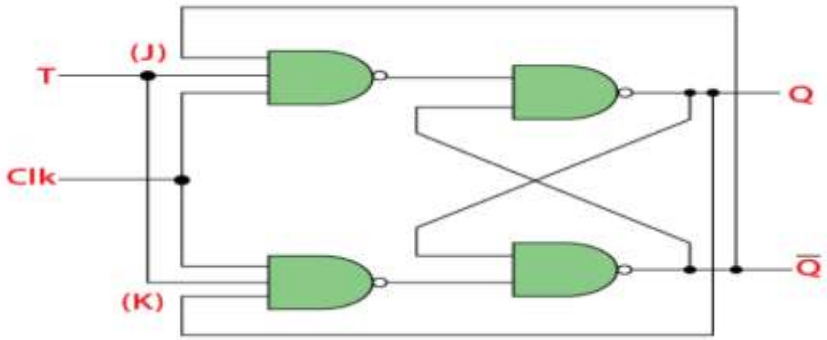

- Truth table of T flipflop:

	Previous		Next	
T	Q	Q'	Q	Q'
0	0	1	0	1
0	1	0	1	0
1	0	1	1	0
1	1	0	0	1

Contd…

- If toggle input is set to 0 and the present state is also 0, the next state will be 0.
- If toggle input is set to 0 and the present state is 1, the next state will be 1.
- If toggle input is set to 1 and the present state is 0, the next state will be 1.
- If toggle input is set to 1 and the present state is 1, the next state will be 0.

Shift Register

- Shift Register is a group of flip flops used to store multiple bits of data.
- The bits stored in such registers can be made to move within the registers and in/out of the registers by applying clock pulses.
- An n-bit shift register can be formed by connecting n flip-flops where each flip flop stores a single bit of data.
- The registers which will shift the bits to left are called “Shift left registers”.
- The registers which will shift the bits to right are called “Shift right registers”.
- Shift registers are basically of 4 types. These are:

1. Serial In Serial Out shift register
2. Serial In parallel Out shift register
3. Parallel In Serial Out shift register
4. Parallel In parallel Out shift register

-

Serial-In Serial-Out Shift Register (SISO) –

- The shift register, which allows serial input (one bit after the other through a single data line) and produces a serial output is known as Serial-In Serial-Out shift register.
- The logic circuit given below shows a serial-in serial-out shift register.

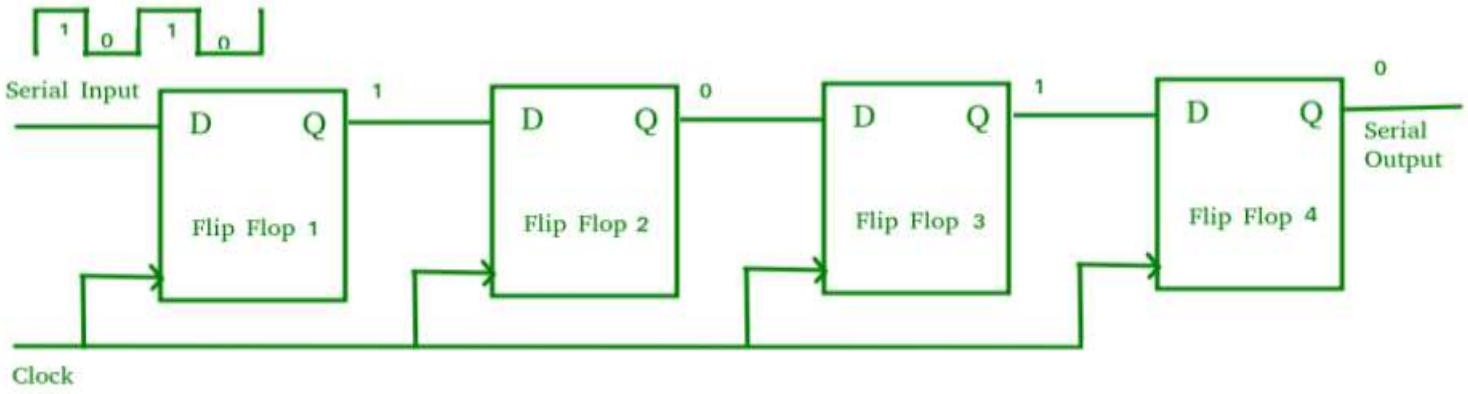

- The above circuit is an example of shift right register, taking the serial data input from the left side of the flip flop
- The circuit consists of four D flip-flops which are connected in a serial manner.
- All these flip-flops are synchronous with each other since the same clock signal is applied to each flip flop.

Serial-In Parallel-Out shift Register (SIPO) –

- The shift register, which allows serial input and produces a parallel output is known as Serial-In Parallel-Out shift register.
- The logic circuit given below shows a serial-in-parallel-out shift register.

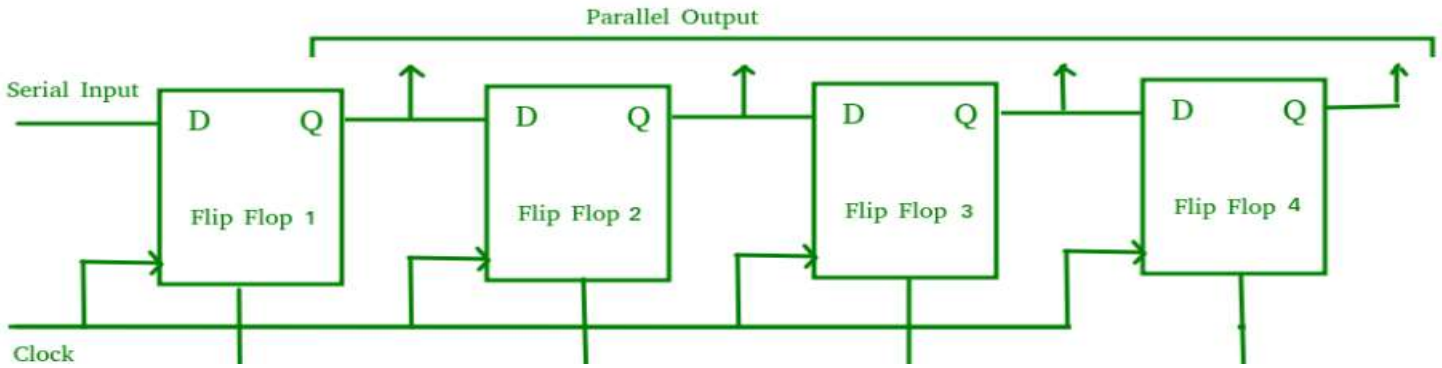

- The circuit consists of four D flip-flops which are connected.
- The output of the first flip flop is connected to the input of the next flip flop and so on.
- The above circuit is taking the serial data input from the left side of the flip flop and producing a parallel output

Parallel-In Serial-Out Shift Register (PISO)

- The shift register, which allows parallel input (data is given separately to each flip flop and in a simultaneous manner) and produces a serial output is known as Parallel-In Serial-Out shift register.
- The logic circuit given below shows a parallel-in-serial-out shift register.
- The circuit consists of four D flip-flops which are connected.
- The clock input is directly connected to all the flip flops but the input data is connected individually to each flip flop .
- Parallel in Serial out (PISO) shift register us used to convert parallel data to serial data.

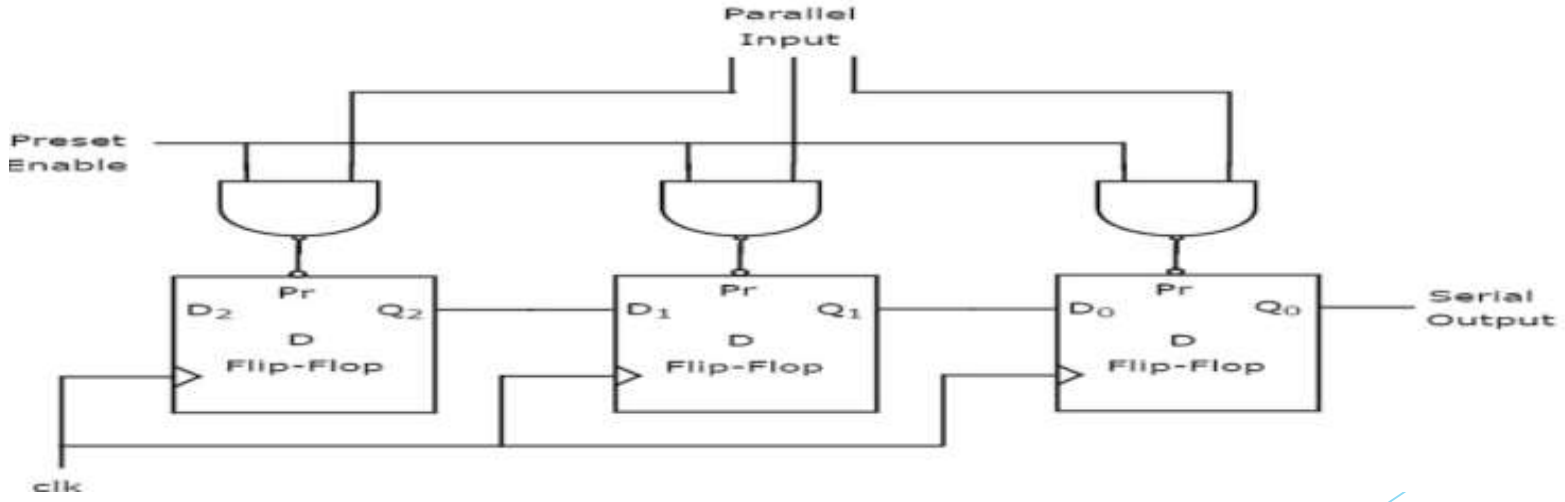

Parallel-In Parallel-Out Shift Register (PIPO) –

- The shift register, which allows parallel input (data is given separately to each flip flop and in a simultaneous manner) and also produces a parallel output is known as Parallel-In parallel-Out shift register.
- The logic circuit given below shows a parallel-in-parallel-out shift register.
- The circuit consists of four D flip-flops which are connected.
- In this type of register, there are no interconnections between the individual flip-flops.
- Since no serial shifting of the data is required.
- Data is given as input separately for each flip flop and in the same way, output also collected individually from each flip flop.

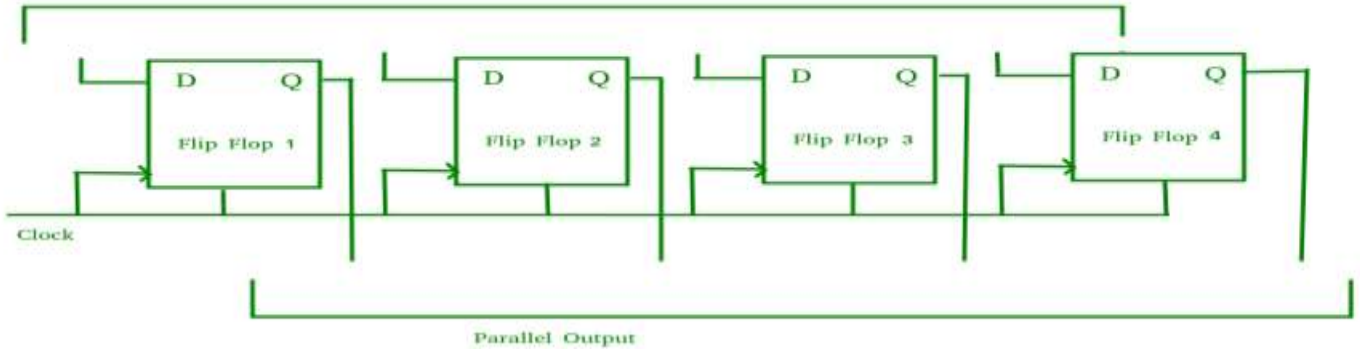

Counters

- A **Counter** is a device which stores (and sometimes displays) the number of times a particular event or process has occurred, often in relationship to a clock signal.
- Counters are used in digital electronics for counting purpose, they can count specific event happening in the circuit.
- They can also be designed with the help of flip flops.
- Counters are sequential circuit that count the number of pulses can be either in binary code or BCD form.
- The main properties of a counter are timing , sequencing , and counting.
- Counter works in two modes
- Up counter : In UP counter a counter increases count for every rising edge of clock.
- Down counter: a counter decreases count for every rising edge of clock.

Counters are broadly divided into two categories :

1. Asynchronous counter
2. Synchronous counter

Contd…

- In asynchronous counter we don't use universal clock, only first flip flop is driven by main clock and the clock input of rest of the following flip flop is driven by output of previous flip flops.

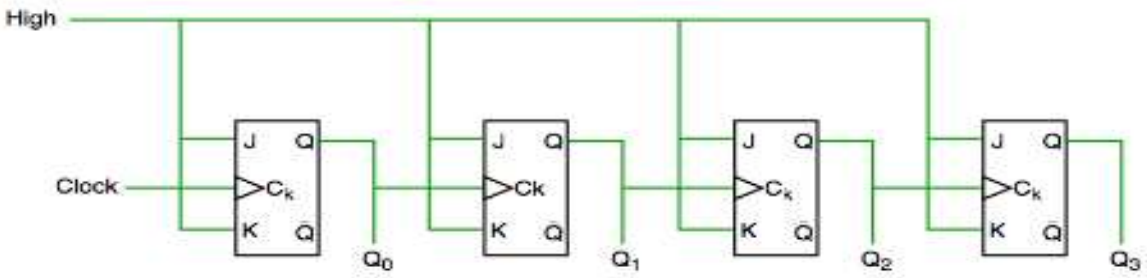

(a) Asynchronous counter

- Synchronous counter has one global clock which drives each flip flop so output changes in parallel.

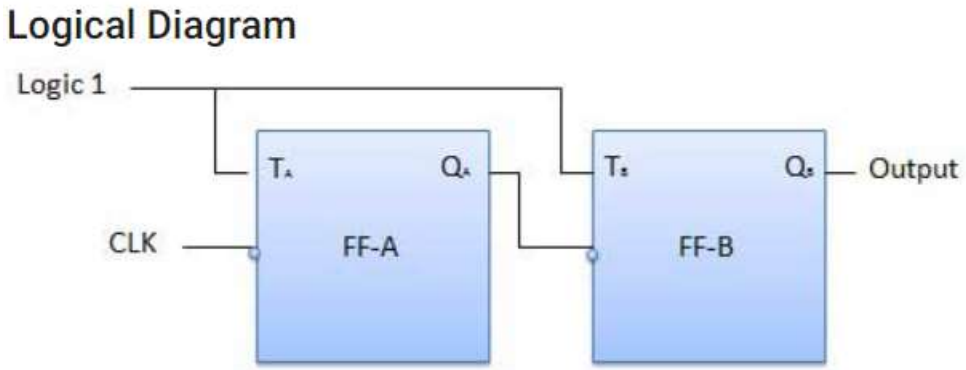

Integrated Circuits

- An integrated circuit (IC) is manufactured using silicon material and mounted in a ceramic or plastic container (known as Chip).
- The basic components of an IC consist of electronic circuits for the digital gates.
- The various gates are interconnected inside an IC to form the required circuit.

The following categories can broadly classify an Integrated Circuit (IC):

- SSI (Small Scale Integration Devices):These types the number of logic gates are usually less than 10 and are limited by the number of pins available in the IC.
- MSI (Medium Scale Integration Devices):These type of devices has a complexity of approximately 10 to 200 gates in a single package. The basic components include decoders, adders, and registers.
- LSI (Large Scale Integration Devices): LSI devices contain about 200 to a few thousand gates in a single package. The basic components of an LSI device include digital systems, such as processors, memory chips, and programmable modules.
- VLSI (Very Large Scale Integration Device):This type of devices contains thousands of gates within a single package. The most common example of a VLSI device is a complex microcomputer chip.

Multiplexer(Mux)

- **Multiplexer** is a combinational circuit that has maximum of 2^n data inputs, 'n' selection lines and single output line.
- One of these data inputs will be connected to the output based on the values of selection lines.
- Multiplexer is also called as **Mux**.
- 4x1 Multiplexer has four data inputs I_3, I_2, I_1 & I_0, two selection lines s_1 & s_0 and one output Y.
- The **block diagram** of 4x1 Multiplexer is shown in the following figure.

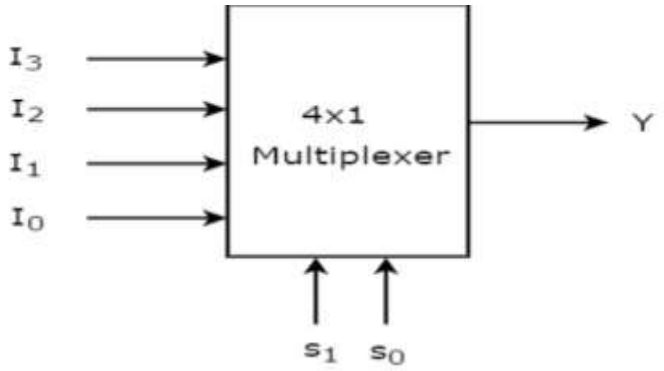

Contd…

- One of these 4 inputs will be connected to the output based on the combination of inputs present at these two selection lines.
- **Truth table** of 4x1 Multiplexer is shown below.

Selection Lines		Output
S_1	S_0	Y
0	0	I_0
0	1	I_1
1	0	I_2
1	1	I_3

From Truth table, we can directly write the **Boolean function** for output, Y as

$$Y=S'_1S'_0I_0+S'_1S_0I_1+S_1S'_0I_2+S_1S_0I_3$$

Contd…

The **circuit diagram** of 4x1 multiplexer is shown in the following figure.

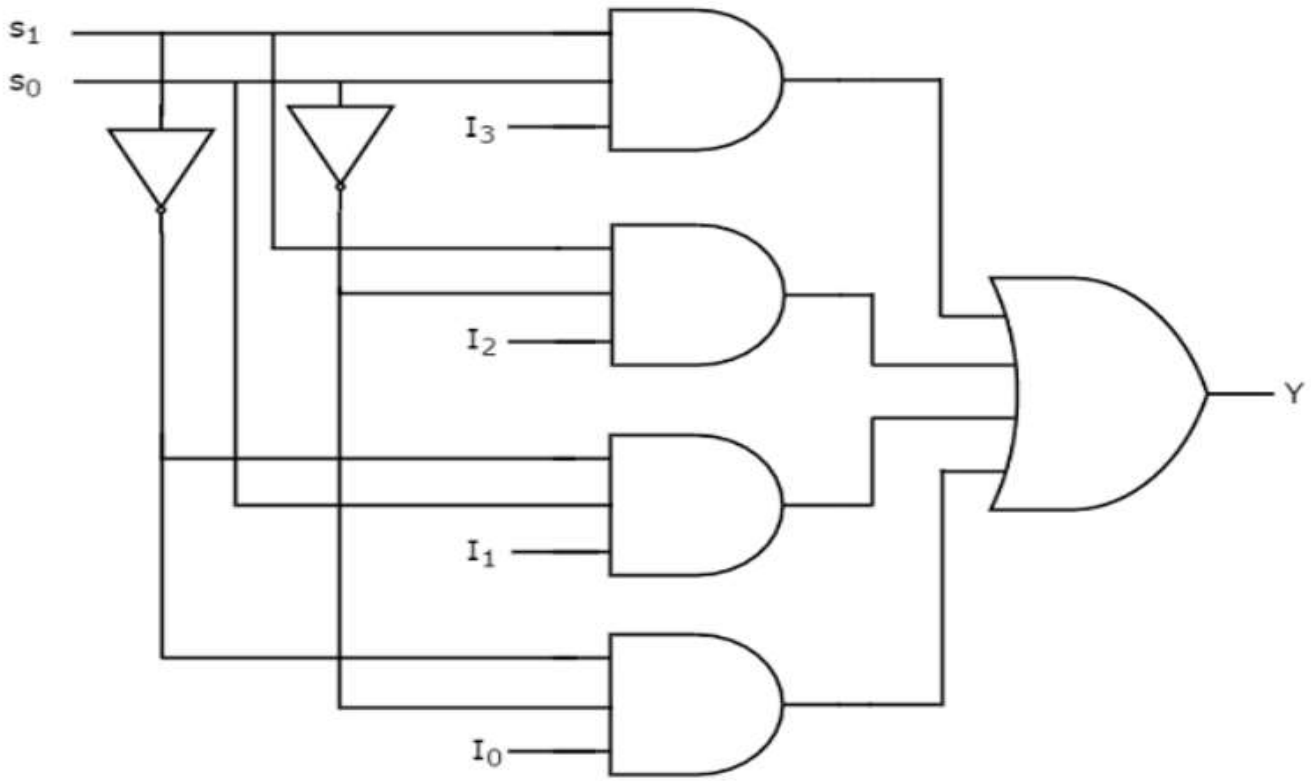

De-multiplexer(Demux)

- A De-multiplexer is a combinational circuit that has only 1 input line and 2^N output lines. Simply, the multiplexer is a single-input and multi-output combinational circuit.
- De-multiplexer is opposite to the multiplexer.
- In the 1 to 2 De-multiplexer, there are only two outputs, i.e., Y_0, and Y_1, 1 selection lines, i.e., S_0, and single input.
- On the basis of the selection value, the input will be connected to one of the outputs. The block diagram and the truth table of the 1×2 multiplexer are given below.

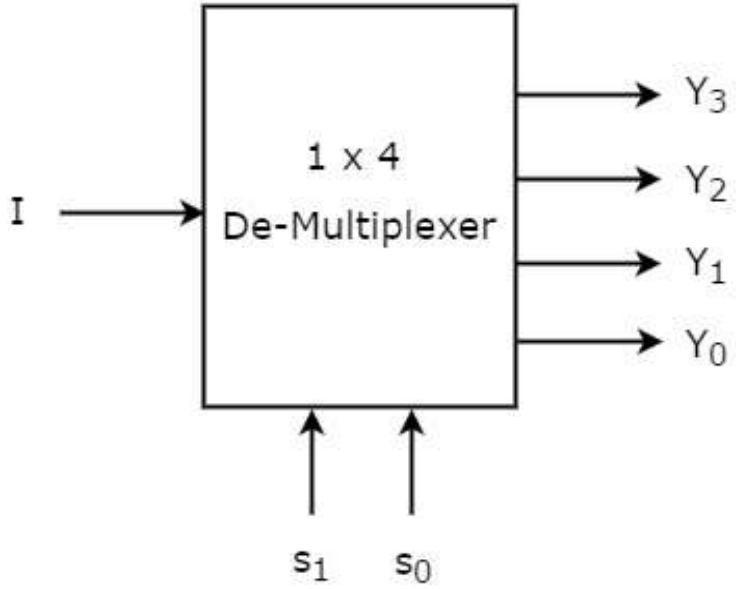

Contd…

The single input 'I' will be connected to one of the four outputs, Y_3 to Y_0 based on the values of selection lines s_1 & s0. The **Truth table** of 1x4 De-Multiplexer is shown below.

Selection Inputs		Outputs			
S_1	S_0	Y_3	Y_2	Y_1	Y_0
0	0	0	0	0	I
0	1	0	0	I	0
1	0	0	I	0	0
1	1	I	0	0	0

From the above Truth table, we can directly write the **Boolean functions** for each output as:

$Y_3=S_1S_0I$ $Y_2=S_1S'_0I$ $Y_1=S_1'S_0I$ $Y_0=S_1'S_0'I$

Contd…

We can implement these Boolean functions using Inverters & 3-input AND gates. The **circuit diagram** of 1x4 De-Multiplexer is shown in the following figure

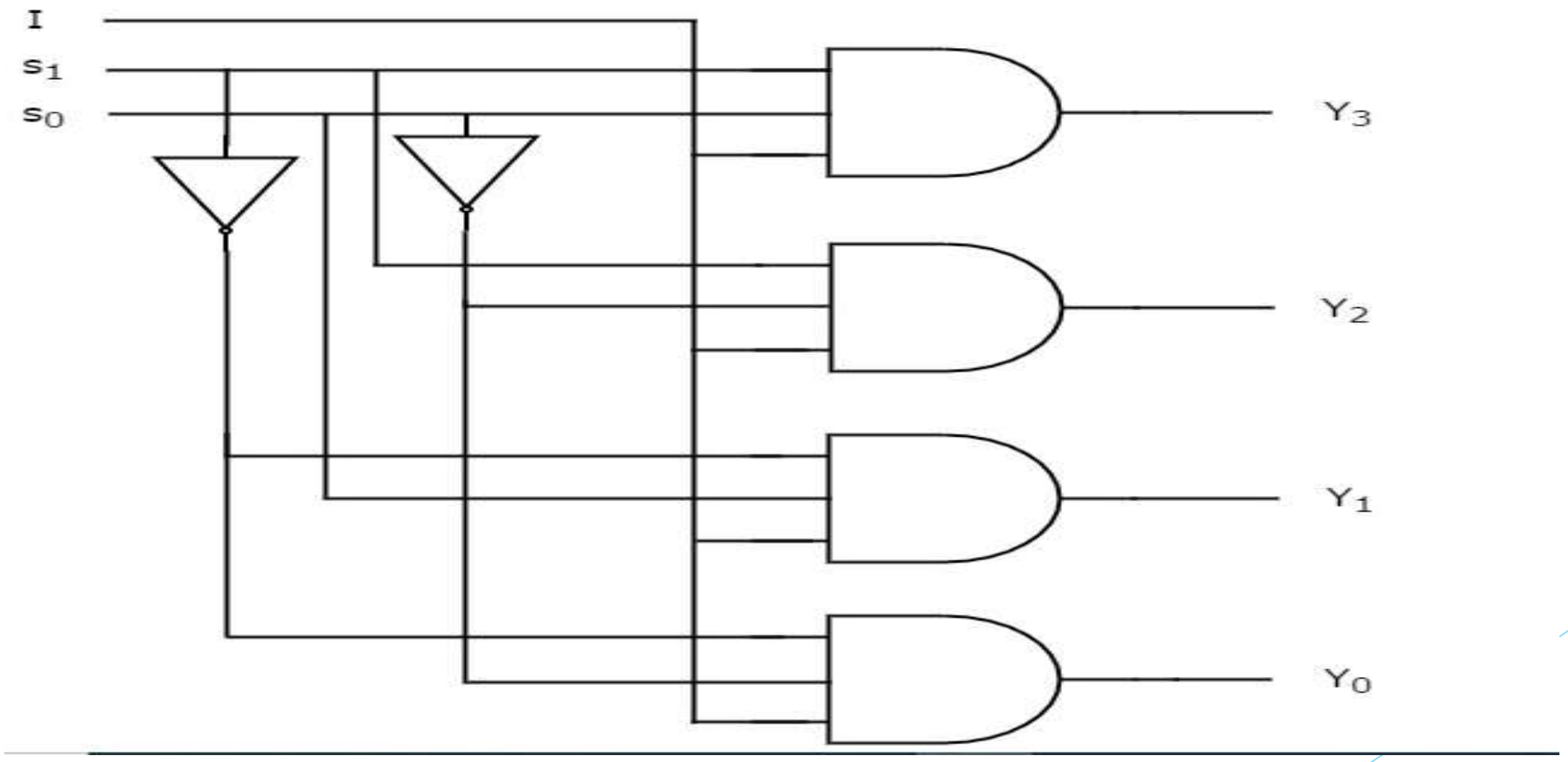

Application of mux and demux

- **Communication System**
- Mux and demux both are used in communication systems to carry out the process of data transmission. A De-multiplexer receives the output signals from the multiplexer and at the receiver end, it converts them back to the original form.
- **Arithmetic Logic Unit**
- The output of the ALU is fed as an input to the De-multiplexer, and the output of the demultiplexer is connected to multiple registers. The output of the ALU can be stored in multiple registers.

Encoder

- An Encoder is a **combinational circuit**
- It has maximum of **2^n input lines** and **‘n’ output lines**, hence it encodes the information from 2^n inputs into an n-bit code.
- It will produce a binary code equivalent to the input, which is active High.
- Block diagram is:

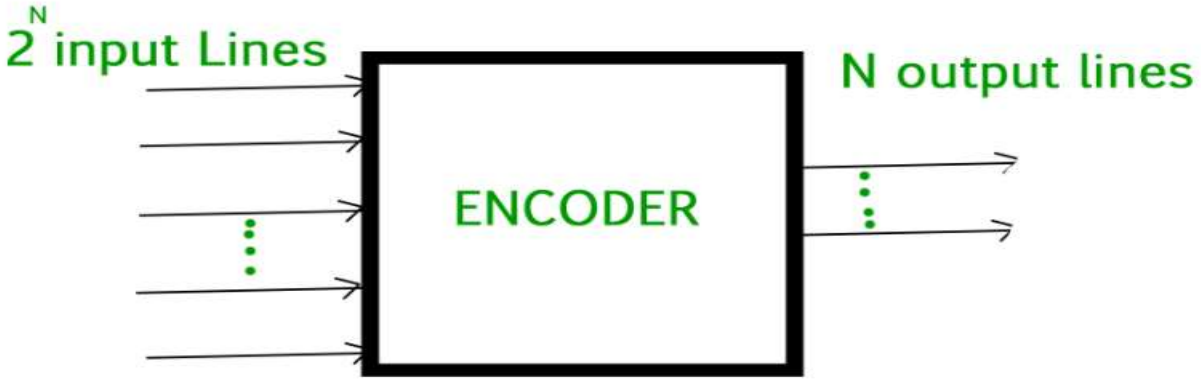

Contd…

- 4:2 encoder and truth table can be as follows:

INPUTS				OUTPUTS	
Y3	Y2	Y1	Y0	A1	A0
0	0	0	1	0	0
0	0	1	0	0	1
0	1	0	0	1	0
1	0	0	0	1	1

Contd…

INPUTS				OUTPUTS	
Y3	Y2	Y1	Y0	A1	A0
0	0	0	1	0	0
0	0	1	0	0	1
0	1	0	0	1	0
1	0	0	0	1	1

From Truth table, we can write the **Boolean functions** for each output as:

$A1=Y3+Y2$

$A_0=Y_3+Y_1$

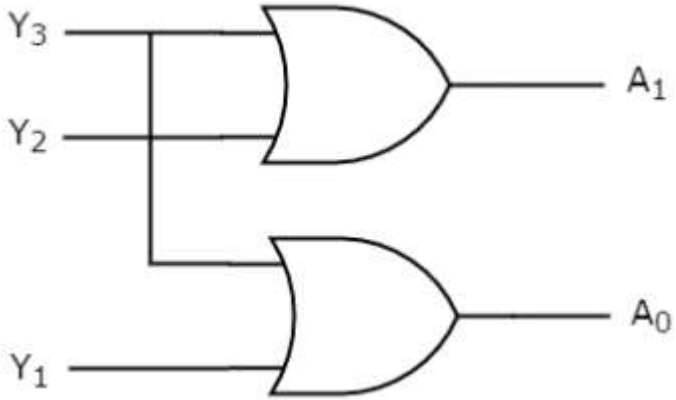

Decoder

- The combinational circuit that change the binary information into 2^N output lines is known as **Decoders.**
- The binary information is passed in the form of N input lines.
- The output lines define the 2^N-bit code for the binary information.
- In simple words, the **Decoder** performs the reverse operation of the **Encoder**.
- At a time, only one input line is activated for simplicity.
- The produced 2^N-bit output code is equivalent to the binary information.
- Block diagram:

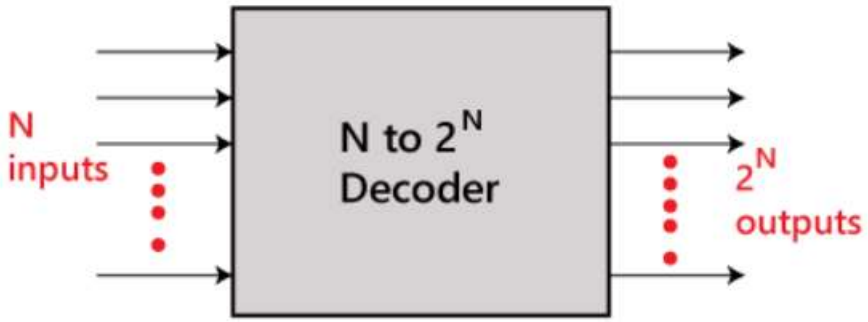

Contd…

- 2 to 4 line decoder:
- In the 2 to 4 line decoder, there is a total of three inputs, i.e., A_0, and A_1 and E and four outputs, i.e., Y_0, Y_1, Y_2, and Y_3.
- For each combination of inputs, when the enable 'E' is set to 1, one of these four outputs will be 1.
- The block diagram and the truth table of the 2 to 4 line decoder are given below.

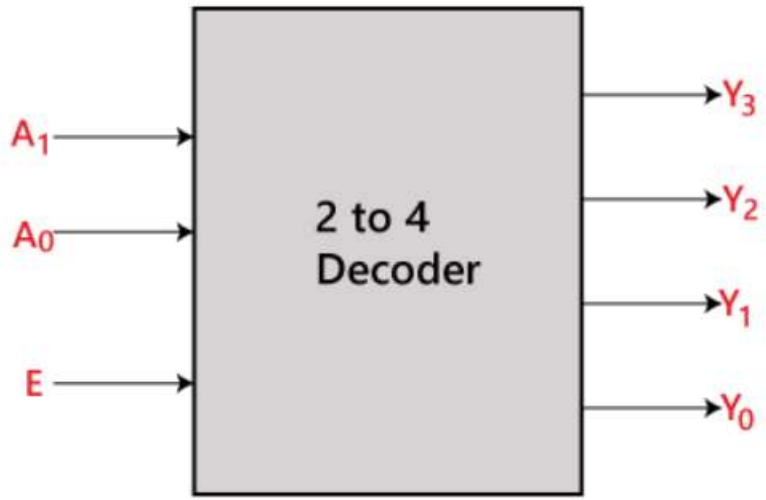

Truth Table:

Enable	INPUTS		OUTPUTS			
E	A_1	A_0	Y_3	Y_2	Y_1	Y_0
0	X	X	0	0	0	0
1	0	0	0	0	0	1
1	0	1	0	0	1	0
1	1	0	0	1	0	0
1	1	1	1	0	0	0

Cont….

- The logical expression of the term Y0, Y0, Y2, and Y3 is as follows:

$Y_3=E.A_1.A_0$
$Y_2=E.A_1.A_0'$
$Y_1=E.A_1'.A_0$
$Y0=E.A_1'.A_0'$

Logical circuit of the above expressions is given below:

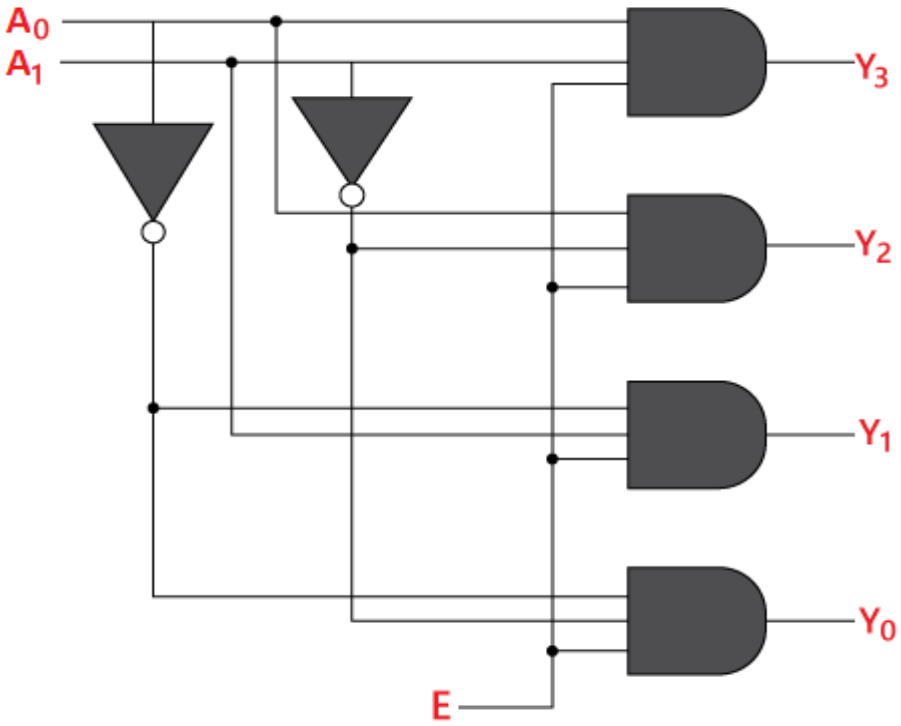

Applications of encoder and decoder

- It is used to convert the data from one form to another form.
- Generally, these are frequently used in the communication systems like telecommunication, networking, and transfer the data from one end to the other end.
- In the same way, it is also used in the digital domain for easy transmission of data, placed with the codes, and then transmitted.
- At the end of the receiver, the coded data are collected from the code and then processed to display