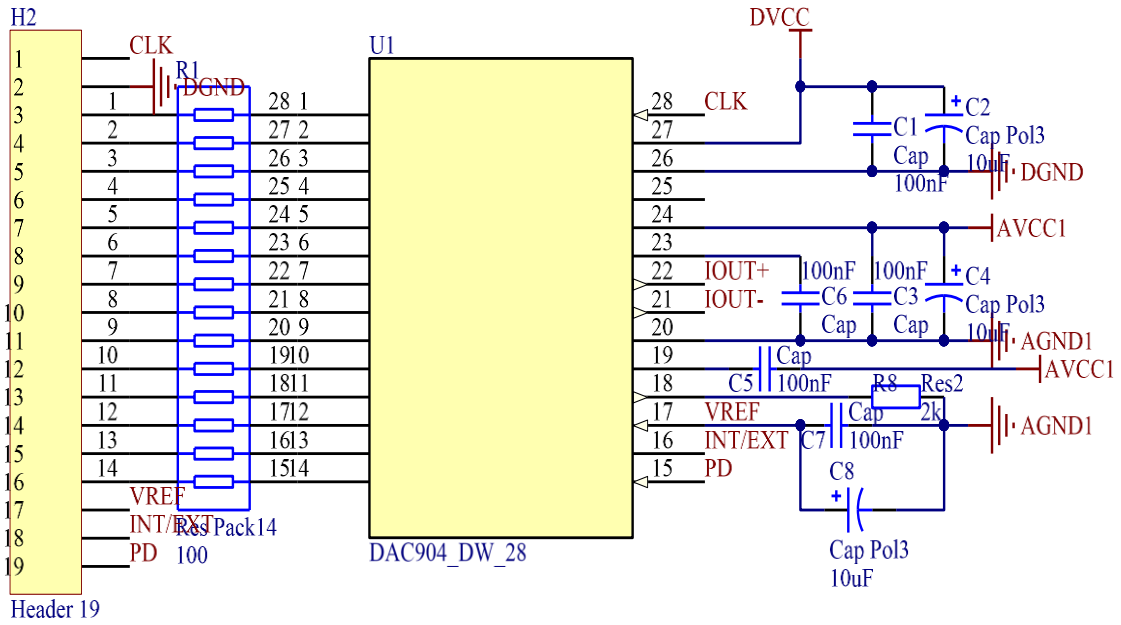
H2
Header 19
CLK
R1
DGND
Res Pack14
100
VREF
INT/EXT
PD
U1
DAC904_DW_28
DVCC
CLK
C1
Cap
100nF
C2
Cap Pol3
10uF
DGND
AVCC1
IOUT+
IOUT-
C6
Cap
100nF
C3
Cap
100nF
C4
Cap Pol3
10uF
AGND1
AVCC1
C5
Cap
100nF
R8
Res2
2k
VREF
INT/EXT
C7
Cap
100nF
AGND1
C8
Cap Pol3
10uF

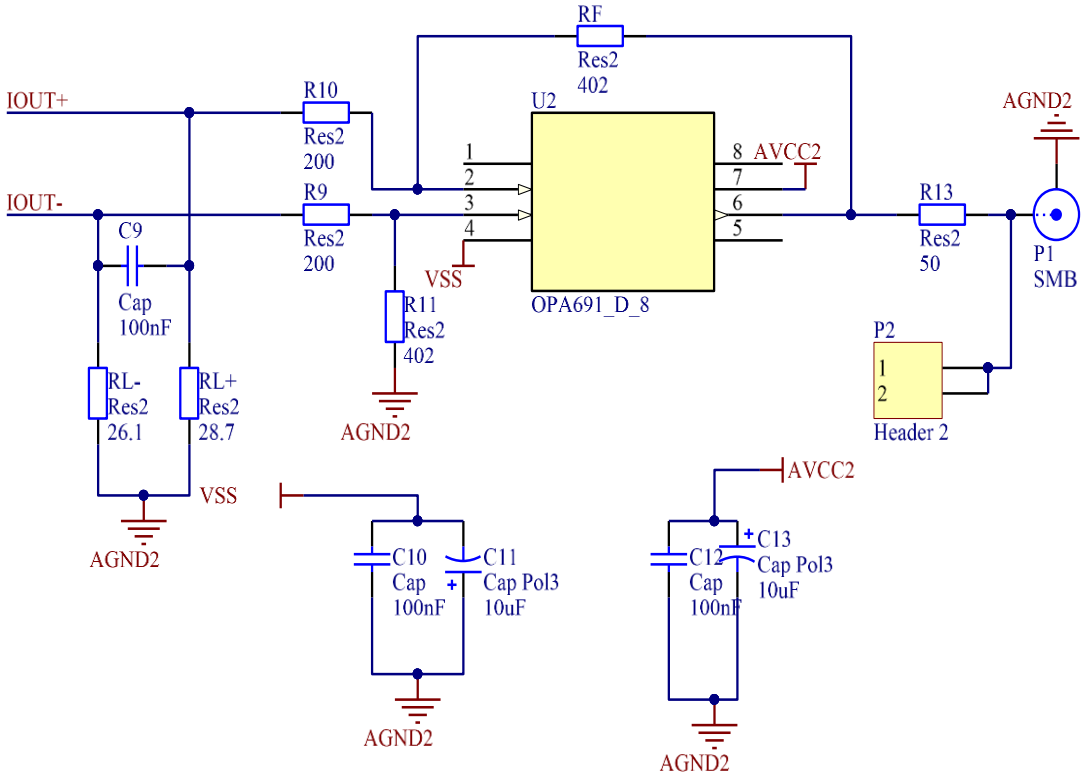
RF
Res2
402
IOUT+
IOUT-
R10
Res2
200
R9
Res2
200
U2
OPA691_D_8
AVCC2
VSS
R11
Res2
402
AGND2
C9
Cap
100nF
RL-
Res2
26.1
RL+
Res2
28.7
VSS
AGND2
R13
Res2
50
AGND2
P1
SMB
P2
Header 2
AVCC2
C10
Cap
100nF
C11
Cap Pol3
10uF
AGND2
C12
Cap
100nF
C13
Cap Pol3
10uF
AGND2

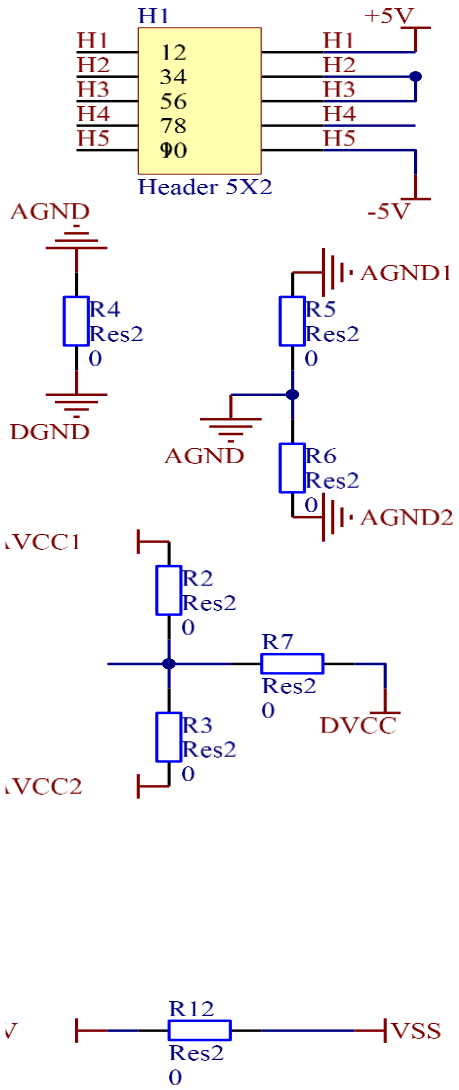
H1
+5V
H1
H2
H3
H4
H5
12
34
56
78
90
H1
H2
H3
H4
H5
Header 5X2
-5V
AGND
R4
Res2
0
DGND
AGND1
R5
Res2
0
AGND
R6
Res2
0
AGND2
VCC1
R2
Res2
0
R7
Res2
0
DVCC
R3
Res2
0
VCC2
R12
Res2
0
VSS