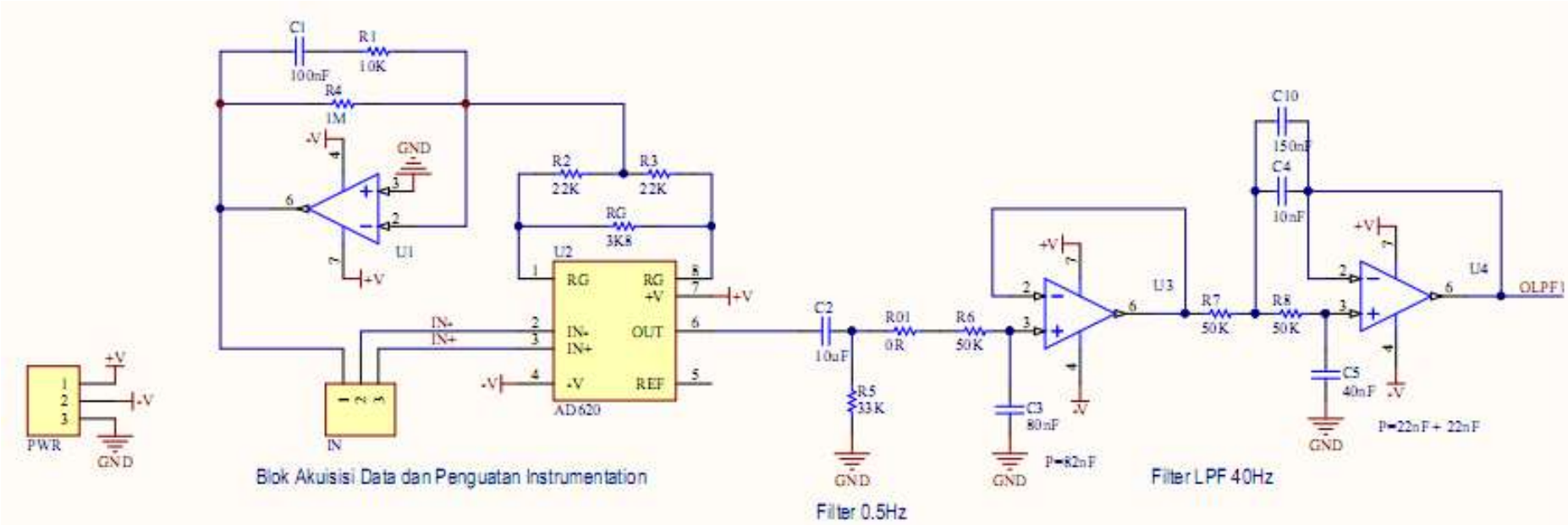

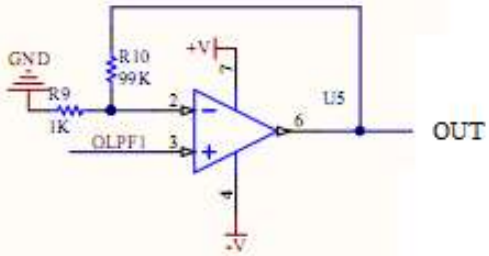

Penguat 100x