**MARMARA UNIVERSITY**
**FACULTY OF ENGINEERING**

# Collecting and transferring the sunlight using fiber optic cables and lenses

Yusuf Savaş

**GRADUATION PROJECT REPORT**

Department of Electrical and Electronics Engineering

**Supervisor**
Assoc. Prof. Onur Cihan

ISTANBUL, 2021

ACKNOWLEDGEMENTS

While writing this thesis I have received a great deal of help and motivation.

I would first like to thank my supervisor, Professor Onur Cihan, without his expertise in writing thesis and proposal I would have a very hard time writing both the proposal for the TUBITAK 2209-A Research Project Support Program and this thesis.

Also, I would like to family and my friends listening the every part of the project and contributing with their amazing ideas and motivating me to solve this problem so that we can change the future of the lighting industry.

**February 2021**

**Yusuf Savaş**

# TABLE OF CONTENTS

# ABSTRACT

With the increased population in mega cities architects had to design denser and bigger and taller buildings to supply this increased population accessing the healthy sunlight is getting harder and harder. The working hours, the traffic puts a heavy burden our health limits our accessibility to sun. The Vitamin D market is bigger more than ever an in the statistics coming from the UK %74 of the people has levels below the optimum level for wellbeing and %27 of have insufficient or deficient levels of Vitamin D. This shows us a very big and increasing problem. We cannot access the sunlight enough.

We cannot change how we work. We cannot decrease the population, or we can't make the buildings so that every room and every floor take enough light. So, what can we do so that people get enough sunlight? To fix this problem and increase our health and decrease the energy use we should find a solution to transfer the sunlight and in end of the research we will be able to find it.

The solution is that transferring the sunlight using fiber optic cables. To make this first we have to gather the enough sunlight using specially made lenses. Because of the sun is moving and our circadian rhythm is designed according the to sunlight we must catch the sunlight somehow. That is, we should use sun tracker mechanism to track the sun so that we can deliver

the daylight into the unlit places of buildings. Later when we gathered the sun to transfer the sun, we can use fiber optic cables. These cables are made for transferring the light so they should be capable of transferring the sunlight itself. And at the end of the cable with the light point and LED combination the balance between artificial lighting and natural light can be implemented. This balance will decrease the unnecessary energy use especially in the offices where the light is open day and night. While doing the transfer the user or the manufacturer will be able to monitor their system 7/24 to understand if there is a problem about it.

The light transfer system can be used in offices, plazas, underground places like metros, basements of the houses and anyplace where the health and wellbeing of people is important.

In the end we have considered the problems and proposed a system capable of sun tracking and made a document about how we can create such a system in detail including all the subsystems and algorithm. In the further research we will manufacture the system itself and do the required testing.

# LIST OF SYMBOLS

$\boldsymbol{S_{D65}(\lambda)}$: spectral distribution of the incident radiation of CIE standard illuminant

**₺**: Turkish liras

**°C**: Celsius

Cd: Candela, luminous intensity

gr: Gram

hPA: Hectopascals

hz: Frequency

$I^2C$: Inter-Integrated Circuit

kg: Kilogram

Lm: Lumen, luminous flux

Lx: lux, unit of illuminance

m^2: Meter per square

mA: Milliampere

mm: Millimeter

Ms: Milliseconds

RH: Relative humidity

V: Volt

$\boldsymbol{V(\lambda)}$: spectral luminous efficiency function for daylight

$\boldsymbol{\lambda}$: wavelength of the light in nanometers

$\boldsymbol{\tau(\lambda)}$: spectral transmittance

# ABBREVIATIONS

3D: Three Dimensional

API: Application Programming Interface

ASP: Active Server Page

BJT: Bipolar Junction Transistor

CEN: The European Committee for Standardization

CPV: Concentrated Photovoltaic

CSS: Cascading Style Sheets

DARPA: Defense Advanced Research Project Agency

DEV: Development

EU: The European Union

HTML: Hypertext Markup Language

HTTP: HyperText Transfer Protocol

IDE: Integrated development environment

IEC: International Electrotechnical Commission

IEEE: Institute of Electrical and Electronics Engineers

ISO: International Organization for Standardization

JSON: JavaScript Object Notation

LDR: Light Dependent Resistor

LED: Light Emitting Diode

MOSFET: metal–oxide–semiconductor field-effect transistor

PCB: Printed circuit boards

PLA: Polylactic Acid

PMMA: polymethylmethacrylate

POF: Plastic optical fiber

RFC: A Request for Comments

SOF: Silica optical fiber

SQL: Structured Query Language

TCP: Transmission Control Protocol

URL: Uniform Resource Locator

# LIST OF FIGURES

# LIST OF TABLES

# 1. INTRODUCTION

As an introduction the scientific and genuine value of this project is that by this research we will be able to transfer the sunlight directly into our homes without converting any other type of the energy, the transferred sunlight will illuminance the unlit places of buildings without the need of electricity or other type of energy.

By transferring the sun, we will be using dual-axis sun tracker combined with five LDR and one lux sensor which will be the first in the literature using this sensor combination in a sun tracker system. In the Figure 1.1 below oversimplified version of our research can be seen.

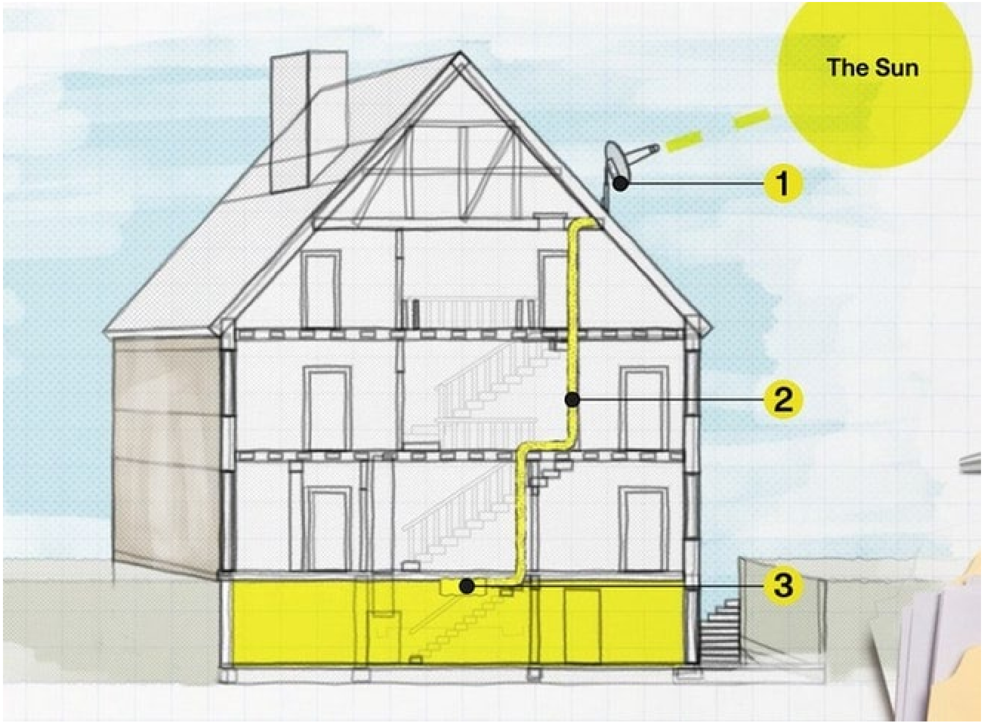


**Figure 1.1** Sunlight transfer

The system we will be trying to build and research will consist of four different sub-system which everyone has It is own innovation in the literature.

Collecting the sunlight using lenses, dual-axis sun tracker to increase the efficiency, an exit point named light point with an automatic dimming with the lux sensor and last but not least a monitoring system for the both consumer and producer to check if their system require maintenance or not.

For the method, system is divided into the six main sub-system these are mechanical sub-system, sensor-sub system, communication sub-system, microcontroller software sub-system, server-side monitoring sub-system and an electrical sub-system. Every sub-system will be built independently and will be combined at the end of the project. In the mechanical subsystem most of the system will be built using 3D Printed parts, bearings, bolts, and nuts. During the research of this subsystem, we will be selecting the most proper combination of lenses and fiber optical cables by testing them. In the sensor- sub system every sensor will be selected and tested one by one, for the microcontroller software sub-system it will be written in C in the microcontroller named ESP32s. In the server-side monitoring sub-system we will be using ASP.NET Core architecture with the C#. Also, html, CSS and JavaScript will be used. For communication sub-system TCP connection with methods of GET and POST between monitoring system and microcontroller will be implemented. And electrical sub-system all the electrical wiring and voltage step-up or step-downs will be implemented.

What we want to answer about this research is that "İs it possible and is it necessary to design a system capable of transferring the sunlight and illuminating the rooms and it can be marketed as a real commercial product?" The other sub problems and sub questions is that "Can we design a system capable of tracking the sun and turn in the sleep mode in night and what is the most efficient way to do it?", "Can we transfer the data from ESP32s to Web Server via Wi-Fi".

In terms of widespread effect, the product will be built in the end of the research can be a real commercial product can be used offices, hospitals, underground places, and other types of dense buildings which has lots of unlit places and rooms. A patent or a utility model can be taken in the end of the research.

# 2. RESEARCH OBJECTIVE

## 2.1. Introduction

With the need for more bigger and crowded buildings we cannot access the sun enough, and we are using more and more electricity to be able to sustain the light levels of these buildings using artificial lights. To be able to use the healthy light of the sun we are first using dual-axis sun tracking mechanism to collect sunlight to Fresnel lenses and direct them using fiber optic cables later by effectively switching between the LED and sunlight by reading the current sunlight values from the sensors and by doing so we can maintain the light level in the rooms. Also, we can monitor the all the information using the web application and determine if the system require maintenance or not. In the Figure 2.1 you can see the main concept of transferring the sunlight.

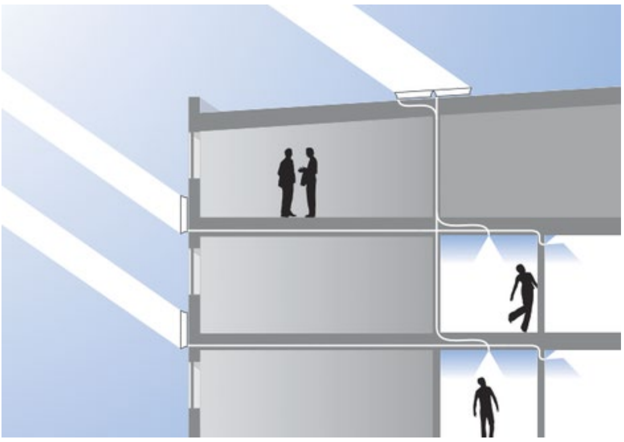

**Figure 2.1** Sunlight transfer.

### 2.1.1. Scientific Value

The scientific value of this research and the product will be created after this research is that we will be able the harness the power of the sun more efficiently and directly without the need of converting it to some other energy type. With the dual-axis sun tracker and specially designed lens and fiber optic cable combination we will be able to transfer the sun into the dark places to eliminate the need of unnecessary light usage and help people to get the natural and healthy daylight.

Not only people be able to get the health benefits of the sunlight, but also people will be able to monitor their systems every day from anywhere using the platform we will develop. They will be able to check if their sun-collector is working correctly and how much they are profiting on daily basis by using this system. Also, the producer and the seller of this product will be able the determine if the sun-collector is need maintenance or not, this monitoring systems also applicable for not only for this product it is also suitable for other types of sun energy collector systems like solar panels.

## 2.2. Statement of the Problem

Sunlight is irreplaceable part of our daily life, with the sunlight we can feel better, restore our health faster and become more productive and become more successful in the long term. But unfortunately, our schedule is not suitable for enough sunlight access, many people spend their life working under the artificial flickering lights which are open day and night and they are not accessing the healthy natural light of the sun. Offices, hospitals, underground spaces are using artificial lights all day because the buildings are not and cannot be designed so that every place on the building can access the sunlight. With the Industrialization and increasing need for more buildings with the increased population, accessing the sunlight is getting harder and harder because of the urban and crowded structuring. To solve this and save the future we need to deliver the sunlight to the people using efficient and specially designed lenses and fiberoptics. And with this research we could achieve this. In the Figure 2.2 the average office building electricity consumption can be easily seen and as we can see from the graph and the top one consumption comes from the lighting.

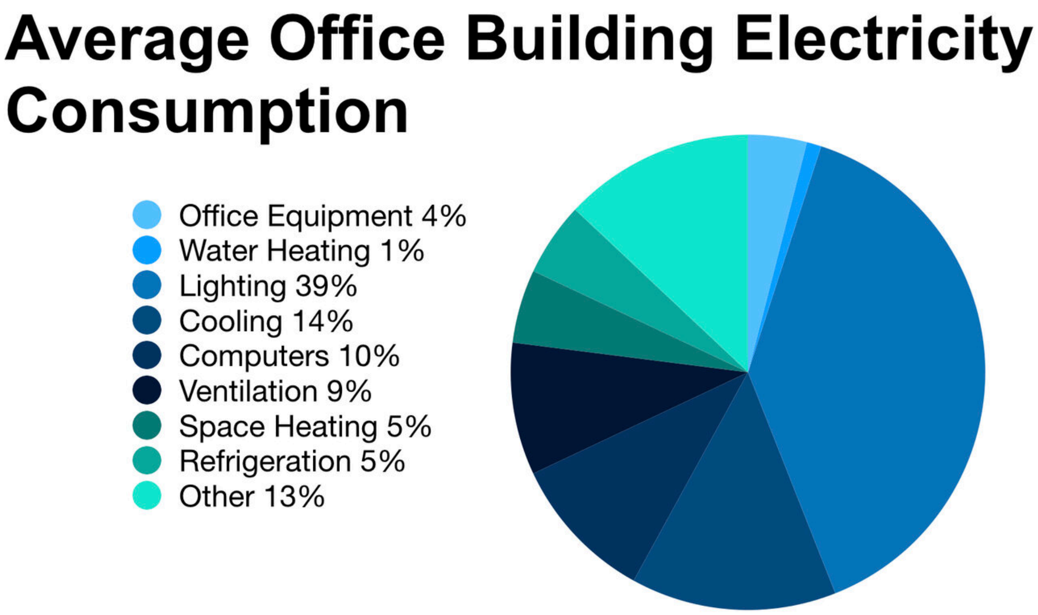


**Figure 2.2** Average Office Building Electricity Consumption **[1]**

## 2.3. Purpose and Goal

### 2.3.1. Aim of this project

Aim of this project is to be able to use the energy of sun and bring light to the unilluminated places of buildings like offices, underground places, hospitals etc. to decrease the need for using artificial flickering lights and become more healthy, productive, and happier in long term. With this research and project, we will be able to find that what is the optimum choice of lenses and fiber optic cables should be use from a vast of selections and combine them with the most efficient dual-axis sun tracker with monitoring system made from sensors.

### 2.3.2. Usage of this project

People can use this product in every building where comfort and health of the occupants are important. In large and complex buildings the connection with the nature and inside is often limited and common areas of buildings such as conference rooms, libraries, hallways, waiting rooms are located inside of the central parts of the structure left without access to the natural light of the sun and illuminated with the artificial light even in the sunniest days. Some of the buildings where this system can be used.

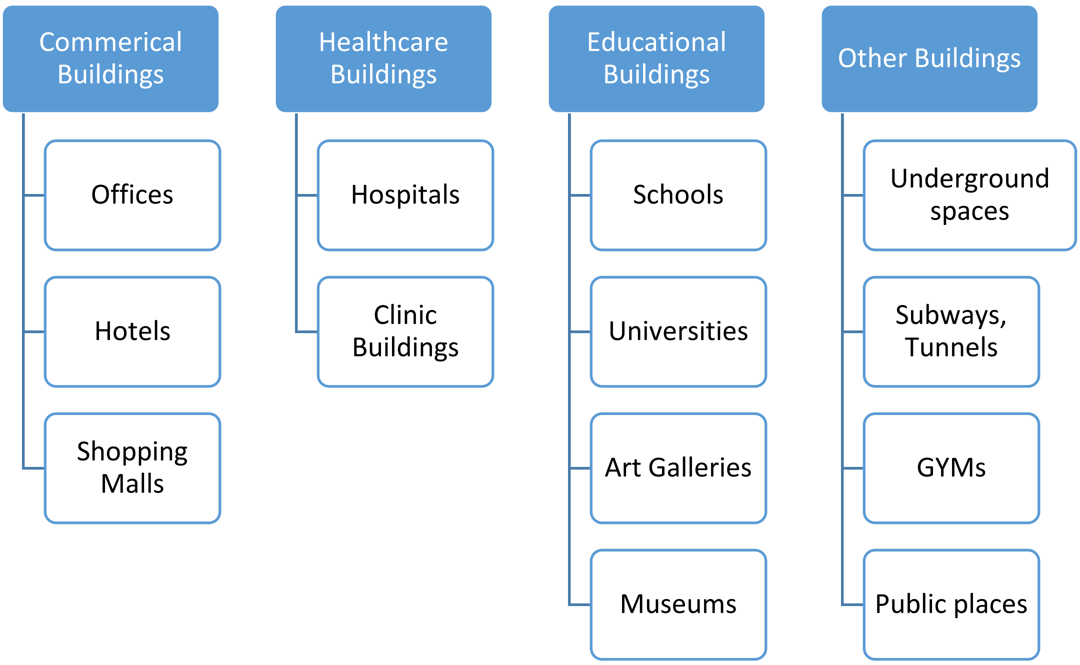


**Figure 2.3** Buildings where fiber optic cable sunlight transfer can be used.

### 2.3.3. The Need and Benefits of this Project

In the Figure 2.4 the needs and benefits of using the daylight as a main source of lighting. Through this part of the document, we will be explaining each point one by one giving various articles supporting them.


**Figure 2.4-** Needs and benefits of the project

- Natural Light and Effects of the Health

The  is particularly important part of the health and well-being in the long term. Our biological clock needs enough exposure of darkness at night and natural sun light during daytime, especially in the morning [2]. This rhythm should be repeated each day otherwise clock start to go out of tune. Distortions in circadian rhythm leads to direct health problems in the long term and also increased risk of accidents [3].

Suitable light provides visual comfort while inappropriate light can cause strain on the eyes and cause headaches, dazzle and tiredness. Also, with the use of this system peoples job satisfaction, motivation and performance can be increased.

Sleep, alertness, and performance are directly linked with our biological rhythm. Sleep and the quality of the sleep is linked with the natural light. Insufficient sleep causes fatigue, which in turn cause accident at home and at work. According to a research main cause of traffic accidents are not drugs or alcohol, but fatigue [4].

In recent years it has been conducted a lot of research showing the physiological and psychological benefits of the natural light, and we will examine these articles and give examples to them by explaining why we need the sunlight in our homes and why do need such a system.

- Increased Learning

According to the article published in 1999 named "Day-lighting in Schools: An Investigation into The Relationship between Daylighting and Human Performance" [5] a correlation was found between the increased use of daylight increases the study performance of students. Also, in another research named "Daylighting Impacts on Human Performance in School" published in Leukos, the Journal of the Illuminating Engineering Society in 2002, the same connection was found [6] Also, again same connection revealed by the article named "Reflections on Relationships in Behavioral Lighting Research" published in 2005 by Peter Boyce [7].

- Better Light Quality

In today's world flickering is huge problem in lighting industry. Flickering can cause eyestrain, headaches, and dizziness [8], but natural light does not flicker and along with that natural light has perfect color rendering value which can be valuable to provide accurate picture of textiles, arts, and furniture.

- Increased value of property

According to the article written by Lighting Research Center in 2003 named "The Benefits of Daylight Through Windows" the rent and selling price for commercial buildings with windows and clear access to the daylight was 20% higher than in buildings without windows [9].

- Decreasing the need for electricity

Access for natural light means less need for electric light which can mean energy saving in the long term.

- Daylight in Urban Cities

According to another research today more than half of the population lives in cities and if the people growth continues in the same rate it is expected that 2,5 billion more people will live in cities in year 2050 [10]. To be able to sustain these kinds of numbers the buildings will be more and more closer. Buildings will be deeper, denser and demands for the energy efficient will rise. More people will be working and living in buildings with insufficient daylight. Also, there are some plans to build an underground city [11] to overcome these problems, but these cities will bring their own problems and one of the problems is again light, these cities will use similar systems.

- Daylight requirements

The EU Workplace (Health, Safety and Welfare) Regulations and The International Organization for Standardization, ISO there are some legislations about how much daylight should a building or workplace receive [12].

### 2.3.4. The Sub Problems and Challenges

#### 2.3.4.1. Choosing the lenses and fiber optic cables

The hardest part of the project is that the choice of lenses and fiber optics, because there are dozens of types of lenses like Plano convex, Plano concave, meniscus, Fresnel, biconcave etc. Choosing the fiber optic cables are same because there lots of types of cables with different specifications like diameter, tensile load, bend radius, maximum temperature and attenuation value. The combinations of these two parts are nearly endless. So, this will be the most challenging part of our research.

#### 2.3.4.2. Designing the sun tracker mechanism

The sun tracker mechanism itself should hold the whole upper body and rotate it by 90 degrees in Y axis and 180 in X axis. This is one of the hard challenges we should solve because even tough similar systems are used in different types of solar these are usually made for heavy use and very costly and use pneumatics to lift right or left part of the solar panels. What we will be designing and manufacturing will be made from PLA material and will not be costly. Also, to reduce the cost and complexity we will be using step motors.

#### 2.3.4.3. Other Sub Problems

Other sub problems include connecting the fiber optic cables with lenses ,choosing and getting the right measurements from different sensors, designing an algorithm capable of tracking the sun accurately, updating the system from the web server, transferring the data from ESP32 to web server and storing them.

# 3. RELATED LITERATURE

## 3.1. Examining the Other Researches

### 3.1.1. Research 1 - Solar Daylight Tubes - Sun Tubes VELUX

The solar daylight tubes or the commercial name for them VELUX Sun Tubes is a product manufactured by the roof window company by VELUX [13]. Their tubes are a way of bringing the sunlight into the home with the most cost-efficient solutions. In the Figure 3.1 the tube and how it is used can be clearly seen.

**Figure 3.1** Picture showing sun tubes

They have two versions of the solar daylight tubes the first one is flexible whereas other one is rigid. Flexible are used when there are obstacles in the loft is space is required and rigid is used when there is path to roof to ceiling. In both versions a hallow plastic dome gathers the sun into the 38cm cylinder path covered with the reflective material to bring the sunlight into the unlit places of houses. The Figure 3.2 shows the light collector part of the product

**Figure 3.2** Sunlight collector dome

Their results are shown that there is an industry for bringing the health daylight into the homes and decreasing the electricity cost and according to the statistics given by the homedepot.com already thousands of people bought this product to install this system into their homes.

The unsatisfactory parts about their research and product are that even they are cost-efficient these products are made only for one floor homes and sunlight can only be carried to roof to the floor below. Because of the high diameter of the product the hallow tube between the roof and house creates an endless cycle of low temperature of outside and high temperature of inside changing between them thus decreasing the energy efficiency. Also, because that the dome that gathers the light is fixed and placed on a roof the angle of the placement is highly decrease the efficient of the product according to the time of the year.

Our contribution to this research that we will be carrying light with fiber optic cables thus increased transmission length and eliminating the endless air flow and change. With the sun tracker mechanism our product increases the efficiency of the collecting the sunlight by always looking the sun.

### 3.1.2. Research 2 Optical Fiber Daylighting System Combined with LED Lighting

A research named "Optical Fiber Daylighting System Combined with LED Lighting and CPV based on Stepped Thickness Waveguide for Indoor Lighting" made in Myongji University [14] shows the great potential of the optical fiber daylight and delivers the methods and design specifications for transferring the light using fiber optic cables. The most innovative part of this design is even tough we have the LED lighting in this research the energy required for the light is made by dividing the sunlight into non-visible and visible light and using the energy of the non-visible light. The Figure 3.3 taken by the research explains the design very well and shows the fundamentals parts of it.

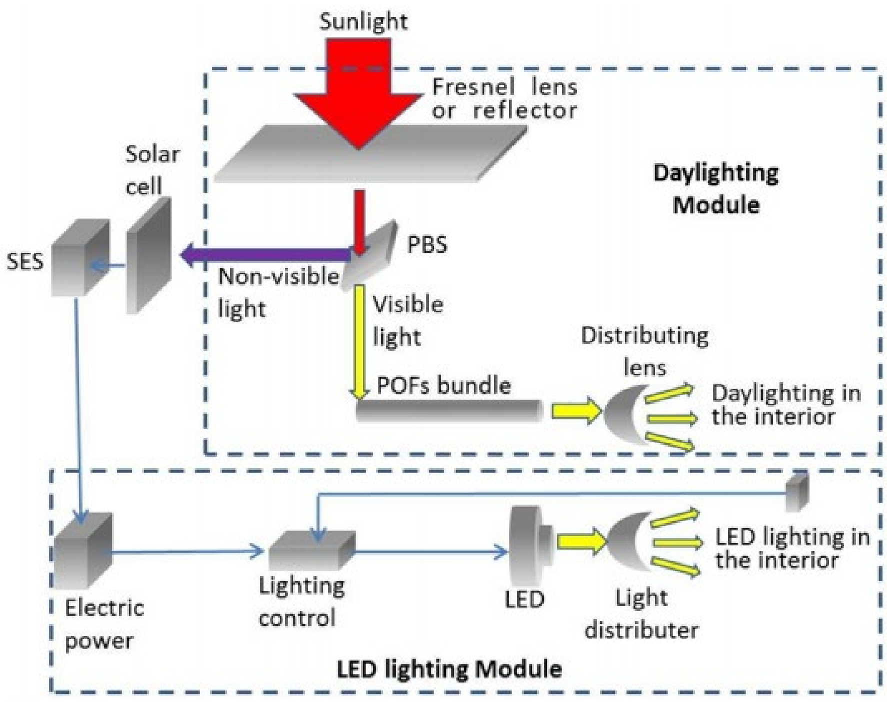


**Figure 3.3** Daylighting module combined with LED lighting module

In this research the Fresnel lenses with diameter of 240mm combined with the POF's with diameter of 2.0mm. And these POF's are combined into 9mm*22.5mm area. The Figure 3.4 shows to placement of the fiber optic cables in bundles.

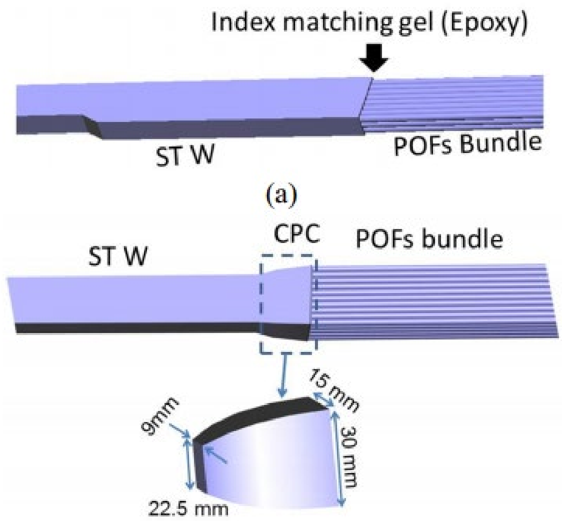


**Figure 3.4** Properties of fiber optic cable bundle

Their results are shown that the heat problem can be solved by separating the sunlight spectrum and the maximum luminous flux on the surface collector which is 158400 lumen can be achieved at the time of 12PM when the sunlight illuminance is 110,000 by using the 5*5 array of Fresnel lenses with 2mm fiber optical cables in bundles and even though they are using complicated light separation mechanisms to power the LED the proposed cost is shows the great potential of using this product as a commercial product. Also because of the comparisons made by them we understand that the best solution of gathering the sunlight is to use Fresnel lenses.

Our contribution to this research is that we will be using sun trackers to track the sun all the times thus increasing the efficiency of the system. Also, instead of using 2mm fiber optic cables in bundles we will be using 6mm fiber optic cables for each Fresnel lenses to decrease the attenuation value.

#### 3.1.3. Research 3 - Optical Fiber-based Daylighting System with Uniform Illumination

A research named “Development of Optical Fiber-based Daylighting System with Uniform Illumination” made in Myongji University by Irfan Ullah and Seoyong Shin [15] tries a different approach and combines a 300mm diameter of very large Fresnel lens combined with small plano-concave lenses to focus the light into the 2mm bundle of plastic optical fibers again combined with silica optical fibers. Also, another important part of this research is that as shown in the Figure 3.5, to match the indexes of the plastic optical fibers and reduce heat absorption of the fiber optic cables the combination of the plano-concave lenses are used with silica optical fibers. This combination reduces the effect of the heat on the cables but increases the complexity and cost of the system.

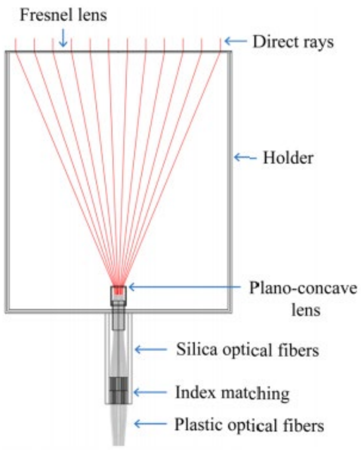


**Figure 3.5** Gathering point

According to the results of the research with the 300mm Fresnel Lens and 2mm fiber optic cables combined into diameter of 14.4mm bundle at the time of 12PM and when the outdoor illuminance is 105000 lux the 11255 lumens can be achieved. Even though their research shows the great potential of using fiber optical cables to transfer sunlight it does not count the LED we will be adding. With the real time measurements of the illuminance value of the outside we will be able to dim or increase the brightness of LED and thus decreasing the electricity usage.

Our contribution to this research is that instead of using one big Fresnel lenses we will be using smaller but more Fresnel lenses thus eliminating the heat problem without the need of complex capturing and focusing systems.

## 3.2. The Difference

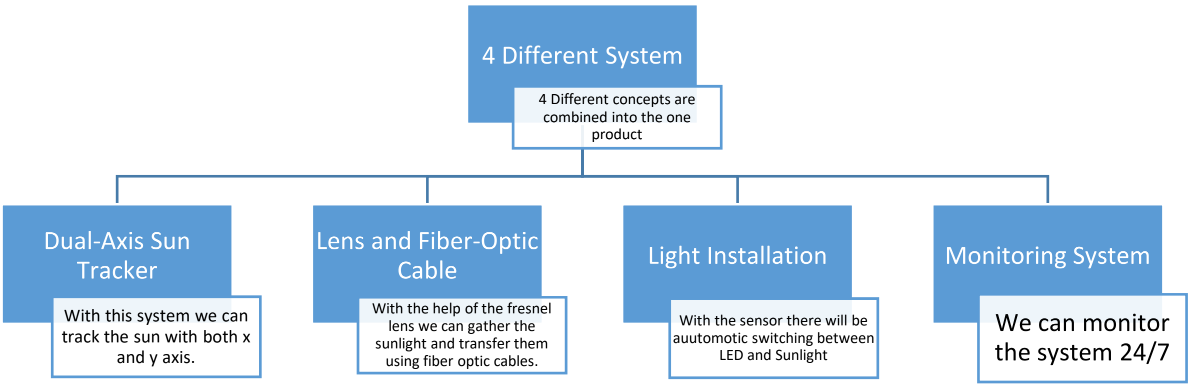


**Figure 3.6** Systems in case of difference

In our research our aim is to combine four different system into the one product. The first system is dual-axis sun tracker which is used in solar energy panel systems to direct the panels to the sun using different sun tracking algorithms to gather the sun's energy more efficiently [16]. This research area is very popular and there are different algorithms and systems are produced to find the most efficient system. The difference here not only that we are  using five LDRs instead of four LDRs we are also using lux sensor to optimize our algorithm. Mechanism of our system will be pan-tilt mechanism which used in some camera movement systems.

The second system is using lens to gather the solar power through the efficient fiber optic cables. Because of the different specifications and attenuation values of the different lenses and fiber optic cables this area is not a popular research area and the most detailed research about this system is made in Myongji University [17]. Similar systems are made but calculations and researches are done without using the sun tracker. Difference here will be the sun tracker itself.

The thirds system is the light installation part of the sun collectors, even though we are directly transferring the sun light, we need an efficient backup systems to be able to use the same system in cloudy and rainy days. So in the light installation part of our product we will be using both LED and a light point where the sun light will come. With the help of the sensors, we can determine how much artificial light we need and dim the LED according to this value. The most important difference here is we are dimming the LED by using the Lux value. With the help this sensor we can calculate how much artificial light we need exactly.

And the fourth system is monitoring via web application. With this application the user and the producer of the system can see if their system is working correctly, how much money does it save, does it collecting the sun efficiently or is there a problem and the maintenance is required or not, the similar systems are used in some of the high-end solar power panels to solve similar problems [18]. But most important difference here is that we will design a monitoring system for such a complex system including all the sensor values, X and Y coordinates, status of lenses, status of LED etc.

Our research and product will be the only one on the market and literature by combining these four different systems to see their effects as a whole and bring the sunlight into to our homes with most innovative solutions.

### 3.3. Originality of the Project

According to our research there is no other company or research are trying to combine these four different systems into the one system and investigate the effects of compatibility of these systems. Also, this research becomes more important in our country Turkey, because Turkey is one of the countries which has high Global Horizontal Irradiance value by compared to other countries in Europa [19] ,and currently we are not efficiently using the power of sun and green energy [20].Key differences are,

- Using five LDR and one lux sensor to track to sun instead of using four LDRs only.
- Using sun tracker with dual-axis mechanism instead of a fixed system.
- Dimming LED and create a balance between artificial light and daylight using lux sensor.
- Monitoring system for a sun-collector system.
- Combining four different system into one system and see their effects as a whole.

# 4. DESIGN

## 4.1. Realistic constraints and conditions

### 4.1.1. Economic constraints

To understand the economical constraints of our project we will check the viability of the project and estimate the payback time we have calculated them using various formulas. To make it real as possible as an example we selected an office room in Perpa trade center. This building is well known about it is density and many of its offices are unlit. Variables in the Table 4.1 is directly taken from an office we know.

**Table 4.1** Specification of a plaza office in Perpa Trade Center

| **Specification of a plaza office in Perpa Trade Center** | | | | | |
|---|---|---|---|---|---|
| Size | The number of LED | Watt power of the LEDs | Electricity | On time of Lights | Total working day |
| $\mathbf{55m^2}$ | 20 | 24 Watt | ₺0.94 | 9 Hour | 24 Day |

**Table 4.2** Watt calculations for the LEDs

| **Watt calculations for the LEDs** | | | | |
|---|---|---|---|---|
| Total watt for day | Total watt for month | Total kWatt for month | Electricity bill | On time of Lights |
| 4320 Watt | 103680 Watt | 103.68 kWatt | ₺97.46 | 24 Day |

**Table 4.3** Cost calculations for the sun collector

| **Cost calculations for the sun collector** | | | |
|---|---|---|---|
| Cost of the product | Cost of the installation | Cost of the workmanship | Total Cost |
| ₺3000 | ₺1000 | ₺1000 | ₺5000 |

The variables in the Table 4.3 is all estimated values depending on the experience we have gained through the
research. The cost of the product represents the final product and when the duplicated items are taken and out.

**Table 4.4** Illuminance calculations

| Illuminance calculations | | | | |
|---|---|---|---|---|
| Illuminance of 30x30mm LED | Total lumen in the office by LED | Total lumen of a one light point | Total lumen in the office by using one system | Total lumen in the office by using two system |
| 500 Lumen | 700-1100 Lumen | 10000 Lumen | 5600-8800 Lumen | 11200-17600 Lumen |

Illuminance of the LED is taken from the datasheet of the product then total lumen in the office is calculated. Total lumen of a one light point is estimated value and can be increased or decreased with the actual product. From the table we can see that a two system is capable of producing minimum 11200 lumens which is enough for the office.

**Table 4.5** Payback period calculations

| Payback period calculations | | | |
|---|---|---|---|
| Payback time in terms of day | Payback time in terms of month for one system | Payback time in terms of year for one system. | Payback time in terms of year for two system. |
| 1440 Day | ≈48 Month | ≈4 Year | ≈8 Year 1 Month |

In the Table 4.5 two sun-collector makes the payback time 8 years which is considerably good. If we compare this to the solar panels, an average payback time for the solar panel is 8 years [21], which is similar to our sun collector.

According to our research and estimations this project is viable but to make it viable our total cost should not pass the 5000.

### 4.1.2. Environmental constraints

The usage of our product will decrease the electricity cost thus decreasing the pollution by reducing the required electric supply. Our product using sun the illuminate the unlit places of houses and does not pollute the environment and does not produce harmful gasses. The only environmental constraint is that the placement of the product. In the version we are researching the placement of the product must be in the flat position otherwise we would have to change sun tracking algorithm and mechanism according to the placement of the degree.

#### 4.1.3. Health and Safety constraints

The most important health and safety constrain in our project is that heat. Because that Fresnel lenses are gathering the sunlight into 3mm diameter of focal point the heat in that focal point is that about 80-90 without using anything to disperse the heat. Even though we will be using glass panel at top of the Fresnel lenses if anything flammable items passes through the focal point can create a fire. Thus, to eliminate the change of fire we will have to make the space between Fresnel lenses and focal point closed and in case of high temperature the monitoring systems will give a warning.

#### 4.1.4. Manufacturability constraints

To manufacture the required product for our research we will be using PLA materials printed by 3D printed and connected with the universal bolts. Our constrains is here that sun-tracking mechanism's gears should be strong and dense enough to hold the torque of the whole system. To achieve this, we will print the materials with %100 infill. The other manufacturability constrain is that placement of the Fresnel lenses and fiber optic cables. Even though the lenses have a fixed focal point because of the manufacturability limits the lenses are not exactly same to thus focal point changes. To eliminate this, we will be using fiber optic cable connectors which are manufactured exactly for this problem.

#### 4.1.5. Sustainability constraints

According to the industry there already doing fiber-optic cable lightning and with the increased need for the buildings the need for the sunlight will be more than ever. If we consider the sustainably in terms of durability of our product the materials should be able to stand the constant temperature change with the day and light cycle. According to the research made by 3DPrinterGeeks.com [22] the PLA material direct sunlight does not increase the biodegradation of the material and it could be durable for 15 years however because of the constant torque on the gears of the sun tracker the PLA should be changed to more durable materials like ABS or PETG.

#### 4.1.6. Social constraints

Our research does not have any social constraints.

#### 4.1.7. Political constraints

The EU Workplace (Health, Safety and Welfare) Regulations (1992) requires that "Every workplace shall have suitable and sufficient lighting". Both European Committee for Standardization, CEN and The International Organization for Standardization, ISO puts a daylight requirement and regulations for the buildings saying that "The design illuminance levels needed to enable people to perform visual tasks efficiently and accurately shall be obtained by means of daylight, electric light or a combination of both." [13] That is why our product should provide enough lighting to meet the required criteria for these regulations.

#### 4.1.8. Ethical constraints

Our research does not have any ethical constraints.

### 4.2. Cost of the design

#### 4.2.1. Electronic System Cost

**Table 4.6** Electronic system cost

| Electronic System | | | | | |
|---|---|---|---|---|---|
| **Component** | **Model** | **Piece** | **Price (₺)** | **Total Price (₺)** | **Exact/Estimated Price** |
| Light Dependent Resistor | LDR | 4 | 5 | 20 | Exact |
| Lux Sensor | VEML7700 Lux Sensor | 1 | 30 | 30 | Exact |
| Temperature and Humidity Sensor | DHT11 | 1 | 9 | 9 | Exact |
| Temperature and Pressure Sensor | BMP180 | 1 | 8 | 8 | Exact |
| Rain Sensor | FC-37 | 1 | 6 | 6 | Exact |
| Step Motor Driver | TB6600 | 2 | 121 | 242 | Exact |
| Step Motor | Bipolar NEMA 17 200 | 2 | 196 | 392 | Exact |
| LED | 5050 Double PCB 3 Chip LED | 4 | 18 | 72 | Exact |
| LED Driver | Led Strip Driver | 4 | 55 | 220 | Exact |
| Microcontroller | ESP32s | 2 | 75 | 150 | Exact |
| Voltage Regulator | RT-65D | 1 | 185 | 185 | Exact |
| Cables and connectors | - | - | - | 50 | Estimated |

### 4.2.2. Mechanical System Cost

**Table 4.7** Mechanical system cost

| Mechanical System | | | | | |
|---|---|---|---|---|---|
| **Component** | **Model** | **Piece** | **Price (₺)** | **Total Price (₺)** | **Exact/Estimated Price** |
| Fresnel Lenses | 70mm 60mm 2mm Fresnel Lens | 10 | 40 | 400 | Exact |
| Convex Lenses | 63mm 70mm 2mm Convex Lens | 10 | 25 | 250 | Exact |
| Light Point Mechanism | Spotlight Mechanism | 6 | 40 | 240 | Estimated |
| Fiber Optic Cable 5mm | 5mm 30 meter | 1 | 350 | 350 | Exact |
| Fiber Optic Cable 2mm | 2mm 30 meter | 1 | 300 | 300 | Estimated |
| Fiber Optic Cable Connectors | 7mm Connector | 8 | 20 | 160 | Estimated |
| Bolts and Nuts | - | - | 50 | 50 | Estimated |
| Filaments | 1.75mm 1kg Esun Filament | 3 | 200 | 400 | Estimated |

### 4.2.3. Tools Cost

**Table 4.8** Tools cost

| Tools | | | | | |
|---|---|---|---|---|---|
| **Component** | **Model** | **Piece** | **Price (₺)** | **Total Price (₺)** | **Exact/Estimated Price** |
| Lux Meter | UNI - UT383 | 1 | 180 | 180 | Exact |
| Multimeter | UNI – UT139C | 1 | 325 | 325 | Exact |

### 4.2.4. Total Cost

**Table 4.9** Total Cost

| Total Budget | | | |
|---|---|---|---|
| **Electronic System** | **Mechanic System** | **Tools** | **Total Budget** |
| 1386₺ | 2150₺ | 505₺ | 4041₺ |

### 4.2.5. Source of Budget and Cost

As a result of our application to TÜBİTAK 2209-A University Students Research Projects Support Program, our project will be supported by TÜBİTAK. And the finish date of our project is updated as 11 months from today. With this support our cost will be sourced by TÜBİTAK thus it will be easier us to develop our project and test our results.

## 4.3. Engineering Standards

There are three different standard types we will be using in our research first one is Network which includes Wi-Fi, TCP, and HTTP for connection. The second one is for software including naming and vocabulary standards and the last one is for mechanical design named Mechanical Standards includes Lend and Fasteners standards.

### 4.3.1. Network Standards

#### 4.3.1.1. Wi-Fi Standards

There are essentially six different Wi-Fi standards and each of them is divided according to the how much data the network can transmit and what radio frequency the network is caried on. In the Table 4.10 the different protocols for Wi-Fi and properties of them can be easily seen.

**Table 4.10** Wi-Fi types and standardization **[23]**

| Conventional Name | Name | Release Year | Maximum Data Rate | Frequency | Notes |
|---|---|---|---|---|---|
| **Wi-Fi 2** | 802.11a | 1999 | 54Mbps | 5Ghz | One of the oldest standards, not compatible with b or g networks. |
| **Wi-Fi 1** | 802.11b | 1999 | 11Mbps | 2.4Ghz | Compatible with g networks |
| **Wi-Fi 3** | 802.11g | 2003 | 54Mbps | 2.4Ghz | Most popular network type. |
| **Wi-Fi 4** | 802.11n | 2009 | 600Mbps | 2.4Ghz & 5Ghz | The first standard to achieve dual-band. |
| **Wi-Fi 5** | 802.11ac | 2014 | 3.6Gbps | 2.4Ghz & 5Ghz | Used by current home routers and has MIMO. |
| **Wifi6** | 802.11ax | 2019 | 10-12Gbps | 2.4Ghz & 5Ghz | The latest technology and has four times throughput of Wi-Fi 5 |

Also, there are number of combinations like the 802.11agn which means that router can support protocols both a, g and n.

The main microcontroller which we are using in research named ESP32-WROOM-32UE uses Wi-Fi protocol named “*802.11 b/g/n (802.11n up to 150 Mbps),2.4 GHz*”. Which means that our microprocessor supports the Wi-Fi 1, Wi-Fi 3 and Wi-Fi 4 with the frequency of 2.4Ghz, so it doesn’t support the frequency of 5Ghz. These protocols are very common and used by nearly every router in our houses, so this standard helps us to not to worry about the transferring the data and connecting the wireless network.

#### 4.3.1.2. TCP Standard

To transfer the packets or called segments we need to rely on protocol named TCP. Transmission Control Protocol made by DARPA Internet Program named RFC-793 [24]. With the help of the protocol, we know the data we want to send will divided to segments and get transferred reliably. The standards of the TPC are already in the ESP23 microcontroller and by using the libraries named “WiFi.h” and “HTTPClient.h” we can use the required functions to send a packet. In the high-level monitoring system software TCP standards are handled by the asp.net core framework itself the only we need to consider here is that to open a port between the web server and ESP32s first both devices should be in the same internet network because that we are working locally and both devices are not connected to the outside world.

#### 4.3.1.3. HTTP Standard

HTTP Standards are the most important part of our monitoring system and the way of transferring the data. The Hypertext Transfer Protocol (HTTP) is a stateless application-level protocol for distributed, collaborative, hypertext information systems and has different standard types from RFC 7230 to RFC7235 standardizing how HTTP/1.1 should work [25]. These standards can be seen from the Table 4.11 below.

**Table 4.11** HTTP Standards

| **Document Name** | **HTTP Version** | **Purpose** |
|---|---|---|
| RFC 7230 | HTTP/1.1 | Message Syntax and Routing |
| RFC 7231 | HTTP/1.1 | Semantics and Content |
| RFC 7232 | HTTP/1.1 | Conditional Requests |
| RFC 7233 | HTTP/1.1 | Range Requests |

| | | |
|---|---|---|
| RFC 7234 | HTTP/1.1 | Caching |
| RFC 7235 | HTTP/1.1 | Authentication |

To transfer the data will be using the HTTP/1.1 standards not the newer standards like HTTP/2.0 or HTTP/3.0 because these standards are not included in the library "HttpClient" and these standards are not supported by the ESP32s. With the help of the HttpClient library and Http standardization we can easily add header and payload to the packet and sent it to web-server from the EPS32s. In the high-level software part by using the document provided by the Microsoft it is easy to implement a Web API capable of understanding the GET and POST request coming from the ESP32s. The [HttpGet] and [HttpPut] attributes handle the communication standards. Without these standards we would not be able to divide the payload and header into the parts.

### 4.3.2. Software Standards

#### 4.3.2.1. JSON Data Interchange Format Standards

JavaScript Object Notation (JSON) is a lightweight, text-based, language-independent data interchange format and standardized in the document named RFC7159 [26] and made by internet Engineering Task Force. We are using these standards in the payload of our POST and GET requests. The results are coming from the web server are coming in the Json format and when we are sending the data to the web server it is in the json format. Usually in the worlds of API's the Json formats are the standard format of payloads and with the help of it we can easily read the data and store the data according to it. In the asp.net core the json format is the default format for the API's response and in the ESP32s software we change the content type to Json in the header of the HTTP request. Even though the format of json can be manually added into the payload with the proper use of parentheses and comma we are using ArduinoJson library to make it easier to read and realize. The JSON formats we are sending and getting can be seen in the Table X in the methods.

#### 4.3.2.2. ASP.NET Core Coding Naming Standards

The naming standards for the .Net framework and C# are provided by the Microsoft itself [27]. The conventional naming standards are already included in the Microsoft Visual Studio 2019 IDE and it gives an error if we do not apply these standards. These standards include general naming conventions, capitalization conventions, names of namespaces, structs, classes and interfaces, naming parameters, resources, and type members. The general notations for the naming are we are using PascalCasing for all for all public member, type, and namespace names consisting of multiple words and camelCasing for parameters names. The Hungarian notation are not used anywhere. To increase the readability and understandably we should apply these standards in our coding. These standards in the IDE can be found in the Tools -> Options -> Text Editor -> C# -> Code Style. Also, the standards for the CSS and HTML are determined by the Microsoft and can be found here too.

#### 4.3.2.3. Vocabulary standards for software

The vocabulary standards are determined in the ISO/IEC/IEEE 24765:2017 [28] document and it provides a common vocabulary applicable to all systems and software engineering work. The standardization made to collect and standardize the terminology. In our document we are using the words according to this standardization. The words like API, Application, High-Level Software, Low-level software comes from these documents. This standardization will help other people to understand this research.

### 4.3.3. Mechanical Standards

#### 4.3.3.1. Lens Standards

The standards of the Ophthalmic optics and Spectacle lenses are made by the ISO in the document named ISO 13666:2019 [29]. And this document defines terms relating to lenses which we are going to use in our project. Below you can find some of the terms which will be using in our document. Also, these parameters will help us to decide which lens and manufacturer to choose.

**Focal Point**: Image point conjugate to an infinitely distant object points on the optical axis

**Edge thickness**: Thickness at a point on the edge of a blank (3.8.1), uncut lens or edged lens

**luminous transmittance:** Ratio of the luminous flux transmitted by the lens (3.5.2) or filter to the incident luminous flux for a specified illuminant and photopic vision. Luminous transmittance is usually expressed as a percentage and calculated from the following formula.

$$\tau_v = 100 * \frac{\int_{380nm}^{780nm} \tau(\lambda) * S_{D65}(\lambda) * V(\lambda) * d\lambda}{\int_{380nm}^{780nm} S_{D65}(\lambda) * V(\lambda) * d\lambda} \quad (4.1)$$

Where

| | |
|---|---|
| $\lambda$ | is the wavelength of the light in nanometers |
| $\tau(\lambda)$ | is the spectral transmittance |
| $S_{D65}(\lambda)$ | is the spectral distribution of the incident radiation of CIE standard illuminant D65 (ISO 11664-2); |
| $V(\lambda)$ | is the CIE 2° spectral luminous efficiency function for daylight (ISO 11664-1). |

**Absorptance:** Ratio of the absorbed radiant flux or luminous flux to the incident flux under specified conditions

**Fresnel Lenses:** Fresnel Lens is a type of composite compact lens that reduces the amount of material required compared to a conventional lens by dividing the lens into a set of concentric annular sections.

#### 4.3.3.2. Fasteners Standards

Fasteners are used to mechanically join objects together, and come in many forms which include rivets, nuts, bolts, studs, screws, washers, eyebolts, nails, and threaded fasteners. These standards are allowed manufacturers to manufacture the same product in everywhere thus making the maintainability of the project easier. There are more than 50 standards about the fasteners including the naming conventions, sizes, strength properties, material qualities and coating [30]. In our project to connect the parts together we will be using M6 and M4 bolts. The standardization for these bolts is in the document named ISO 898-1:2013. In the Figure 4.1 the specification which will be using can be seen.

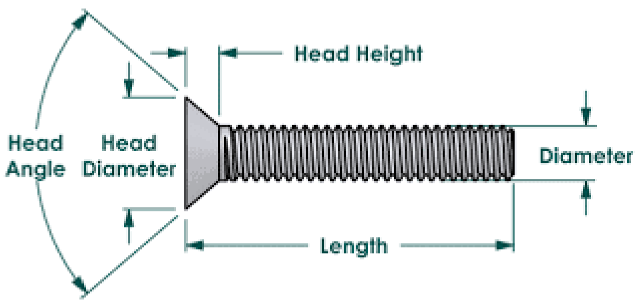


**Figure 4.1** Bolt standard specification naming

## 4.4. Details of the design

### 4.4.1. Design Schematic

In the Figure 4.2 the subsystems can be easily seen.

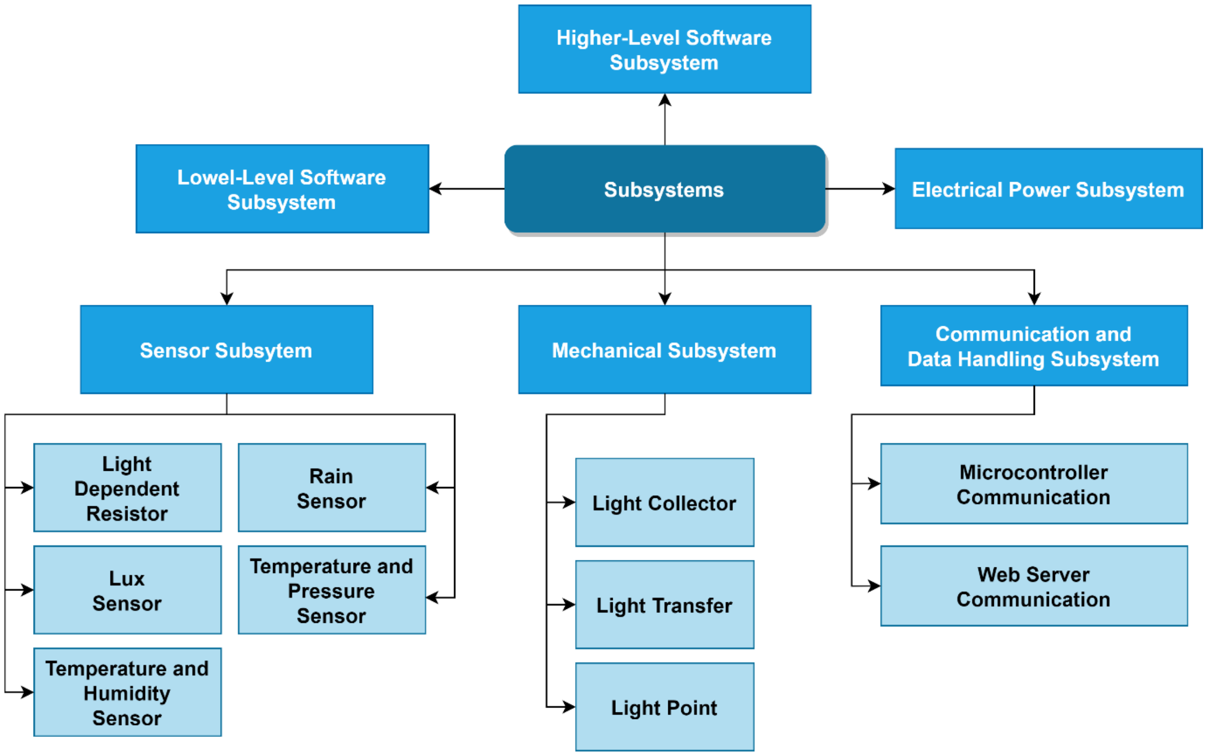


**Figure 4.2** Subsystems design schematic

### 4.4.2. Concept of Operation

In the Figure 4.3 we can see how our system is working and how everything is connected, we will explain each step and each system carefully in the rest of the document.

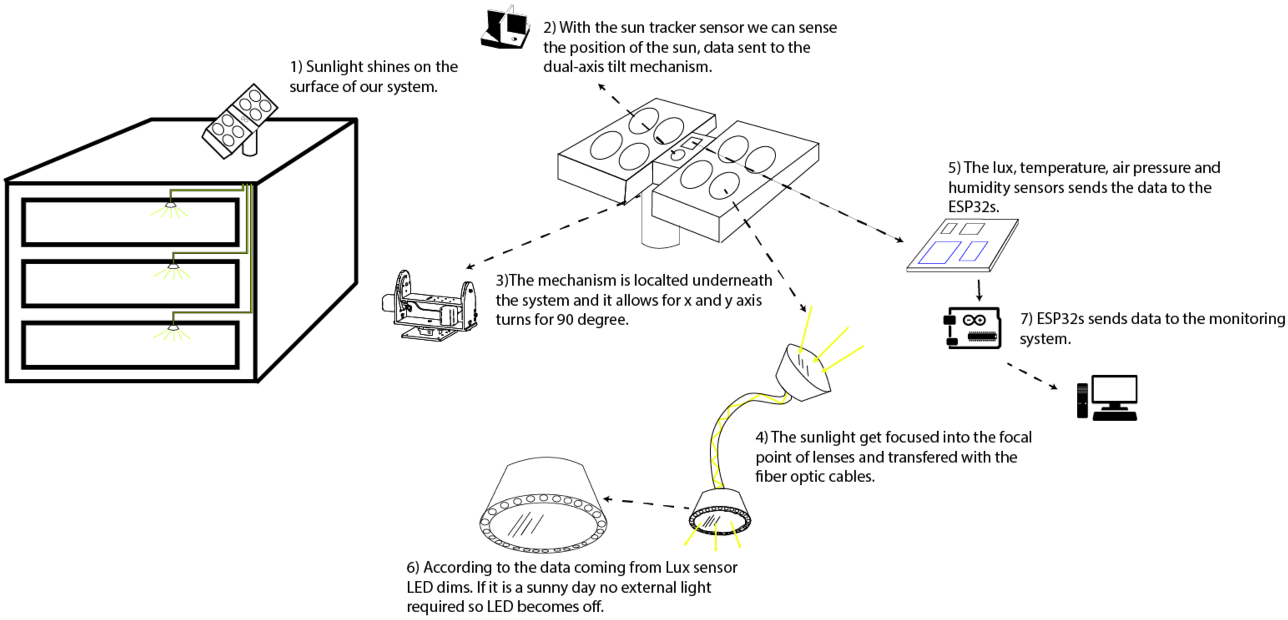


**Figure 4.3** Concept of operation

# 5. METHODS

## 5.1. The design of Sensor Subsystem

### 5.1.1. Overview of the sensor Subsystem

**Table 5.1** Sensor subsystem overview

| Sensor Type | Model | Purpose | Place of use |
|---|---|---|---|
| Light Dependent Resistor | LDR | To track the sun | Sun tracker tube in the main system. |
| Lux Sensor | TS2561 Lux Sensor | To dim the LED | Sensor chamber in the main system. |
| Temperature and Humidity Sensor | DHT11 | To measure temp and humidity to check if maintenance is required | Sensor chamber in the main system. |
| Temperature and Pressure Sensor | MS5611 | To measure temp and pressure to check and locate where our system is. | Sensor chamber in the main system. |
| Rain Sensor | FC-37 | To be able use it as a weather station. | Outside of the main system. |

### 5.1.2. Detailed expression of sensor subsystem

#### 5.1.2.1. LDR

**Table 5.2** LDR Specifications

| Model | Protocol | Working Range | Accuracy | Input voltage | Current Consumption | Size | Weight | Price |
|---|---|---|---|---|---|---|---|---|
| 10mm LDR (Light Dependent Resistor) | Analog | 100Ω – 10MΩ | 10Ω | 5V | 0.5mA (Max) | 10mm x 10mm x 2mm | 5gr | 2₺ |

- LDR is the most power efficient and cheap solution to track the sun, we will be using five 10mm LDRs to determine the position of the sun and we will use this data to drive the step motors of the tilt and pan mechanism of the system.
- Because of the simplicity of the LDR they are very durable, and they can run for hours even under the harsh conditions.
- We will use 10mm LDR instead of 3mm LDRs to detect the sun better by collecting much more sunlight because of the bigger area size.

To connect the five LDR and read them easily from the ESP32s we have created a small module. We can easily add LDRs and remove them. From the Figure 5.1 you can see this module and from the Figure 5.2 you can see a diagram for this module.

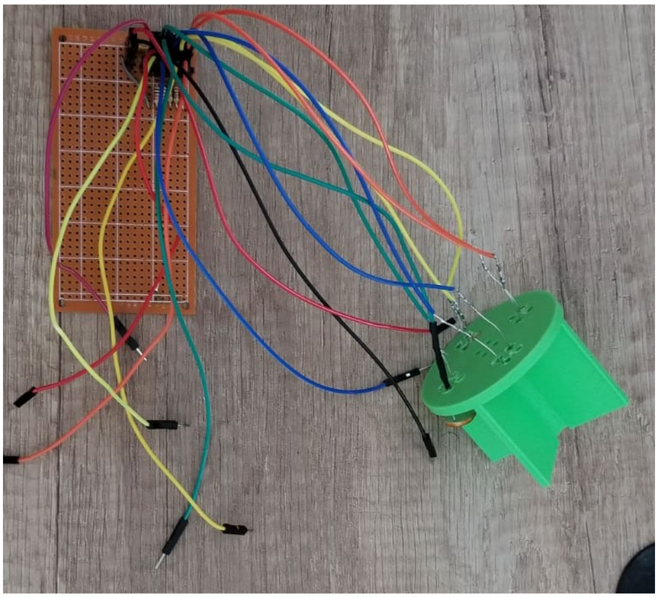

**Figure 5.1** LDR Sensor Module

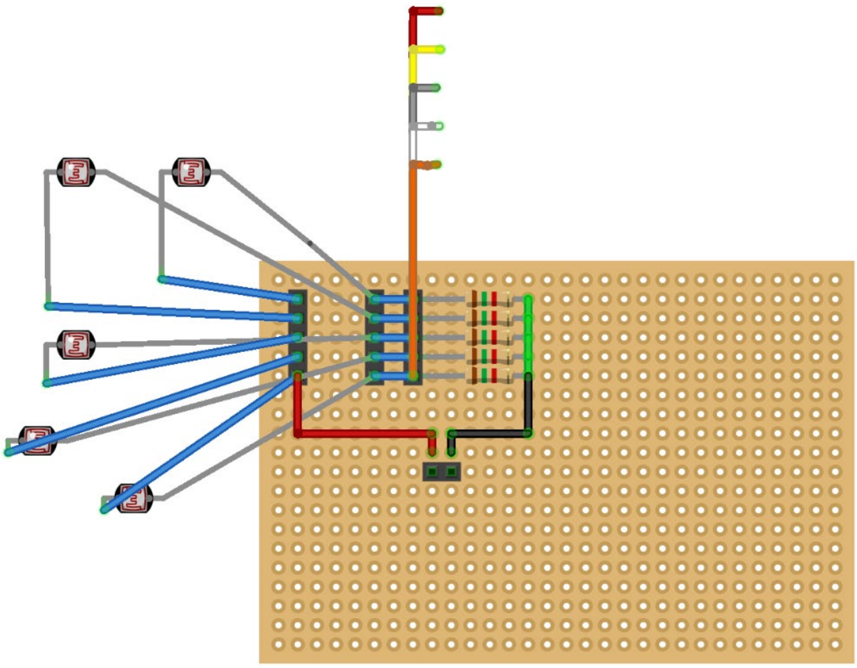

**Figure 5.2** LDR Sensor Module Diagram

#### 5.1.2.2. VEML7700 Lux Sensor

**Table 5.3** VEML7700 Specifications

| Model | Protocol | Working Range | Accuracy | Input voltage | Current Consumption | Size | Weight | Price |
|---|---|---|---|---|---|---|---|---|

| | | | | | | | | |
|---|---|---|---|---|---|---|---|---|
| VEML7700 Lux Sensor | I²C | 1-120kLux | 1 Lux | 2.7V-3.6V | 0.24mA (Max)<br>3.2uA (Min) | 18mm x 15mm x<br>2mm | 10gr | 20₺ |

- With VEML7700 Lux sensor we can measure how much lux does the system gather. According to this value we can understand if the weather is cloudy, dark, rainy etc. and we can dim the brightness of the LED according to that value.
- This sensor has a working range of 1 to 120kLux and it is ideal for us because the sunlight's maximum illuminance is 120kLux [31], this will allow us measure full range of lux values of the sun.
- Minimal current consumption.

To test the VEML7700 Lux Sensor we have measured the lux sensor with the lux meter to check it is validity and we found that it is working correctly. The code for the Lux Sensor can be found in the appendix..

#### 5.1.2.3. DHT11

**Table 5.4** DHT11 Specifications

| Model | Protocol | Working Range | Accuracy | Input voltage | Current Consumption | Size | Weight | Price |
|---|---|---|---|---|---|---|---|---|
| DHT11 Humidity and Temp Sensor | Digital | 20-90%RH<br>0-50 ℃ | ±5%RH ±2℃ | 3V-5.5V | 0.2mA (Avg) | 12mm x 15mm x 6mm | 2.4gr | 10₺ |

- With the DHT11 we can measure the temperate and humidity of the system. These values will be shown on the monitoring systems, unusual values of temperatures and humidity means that something is wrong with the system and maintenance can be required.
- Humidity can cause lenses to fog and with the sensor we will be able to detect it and take precaution for them.
- Sensor has minimal current consumption and has a standby mode when it is not measuring.

We have tested the DHT11 and measured the temperature and humidity with it. According to temperature coming from the BMP180 the temperature values are correct and the accuracy that given us in the datasheet is correct .

### 5.1.2.4. BMP180

**Table 5.5** BMP180 Specifications

| Model | Protocol | Working Range | Accuracy | Input voltage | Current Consumption | Size | Weight | Price |
|---|---|---|---|---|---|---|---|---|
| BMP180 Temp and Pressure Sensor | I²C | 300-1100hPa 0-65℃ | ±1hPa ±1℃ | 1.8V-3.6V | 5uA at 1/ sample/sec | 14mm x 12mm x 2mm | 0.9gr | 10₺ |

- With the BMP180 we can measure both temperature and pressure, we will use this sensor mainly for the pressure, we can calculate where our system stays in vertical axis and use these values to calculate the position of sun.
- Also, by using the temperature value coming from both BMP180 and DHT11 we can verify that if the temperature measurement is wrong or not.
- People who will monitor  their system will be able to use it as a weather station.

We have tested the BMP180 and measured both air pressure in pascal, temperature in Celsius and attitude in meters. According to our comparison with our phone which has a air pressure sensor the pressure is correct and air temperature value is correct but even tough our high effort we couldn't be able to find the correct attitude. There is a 100m error when compare it with our phone. We think that library that we are using is using some different calculation method thus giving us wrong attitude.

### 5.1.2.5. FC-37

**Table 5.6** FC-37 Specifications

| Model | Protocol | Working Range | Accuracy | Input voltage | Current Consumption | Size | Weight | Price |
|---|---|---|---|---|---|---|---|---|
| FC-37 Rain Sensor | Analog or I²C | Depends Input Voltage | 0.5V | 3.3V-5V | 15mA | 50mm x 38mm x 10mm | 5gr | 5₺ |

- With FC-37 we can measure if outside is rainy or not, also we can verify that measurement by using Open Weather platform. If there is a contradiction it means that something is wrong with the system and maintenance can be required.
- Also, with the addition of this sensor our system can serve as a weather station.

## 5.2. Mechanical Design Subsystem

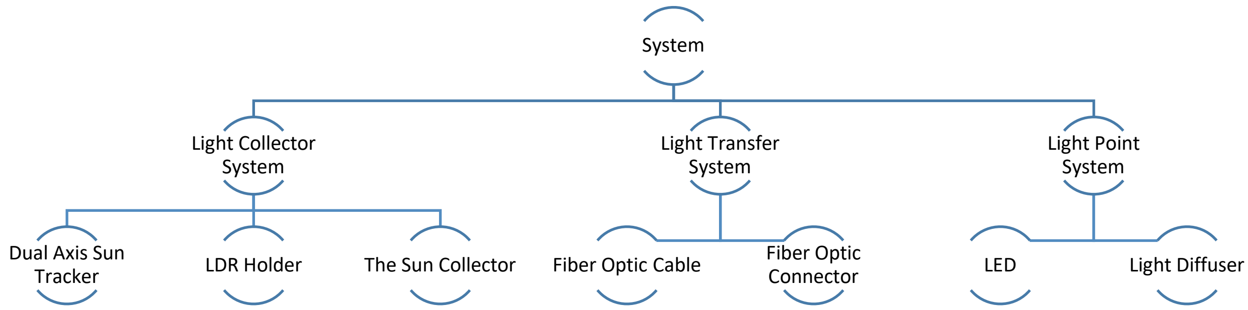


**Figure 5.3** Mechanical subsystems

### 5.2.1. Light Collector System

This part of the product is all about tracking the sun and collecting the sun by using lenses.

#### 5.2.1.1. LDR Holder

This is the part where LDRs are located. The aim of this holder is to keep the LDRs in place so that LDRs resistance value can increase or decrease according to the where the sun is located. If the holder is not perpendicular to the sunlight, the shadow will fall on the LDRs and will create difference in terms of light intensity. This part will be printed on 3D Printer, the height of the holder is important and in our research one of our aim is to determine the most efficient length of this holder. The length can be between 5cm to 10cm. We will try the length of 5,7 and 10cm and determine which length can create this shadow effect more efficiently by testing them. In the Figure 5.4 we can see the LDR Holder and where it is located in the system.

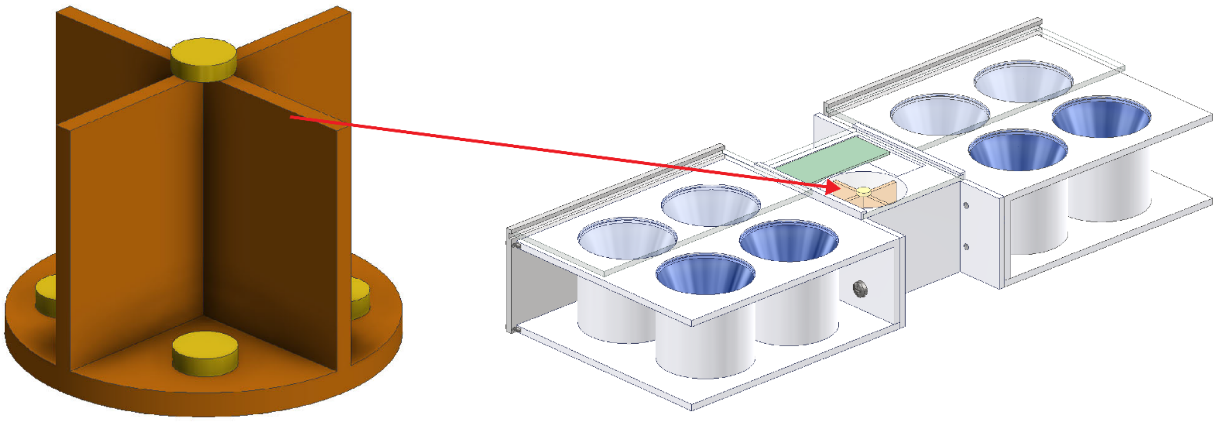

**Figure 5.4** LDR Holder location on the system

In the Figure 5.5 you can see our first version of LDR Holder with the length of 45mm. In the Figure 5.6 you can see our second version of LDR Holder with the length of 45mm with different design to hold LDRs. Also, in the figure 5.7 you can see our last version of LDR Holder with the length of 75mm and increased wall lengths. Differences between them and why we used our last version can be found in the Table 5.7.

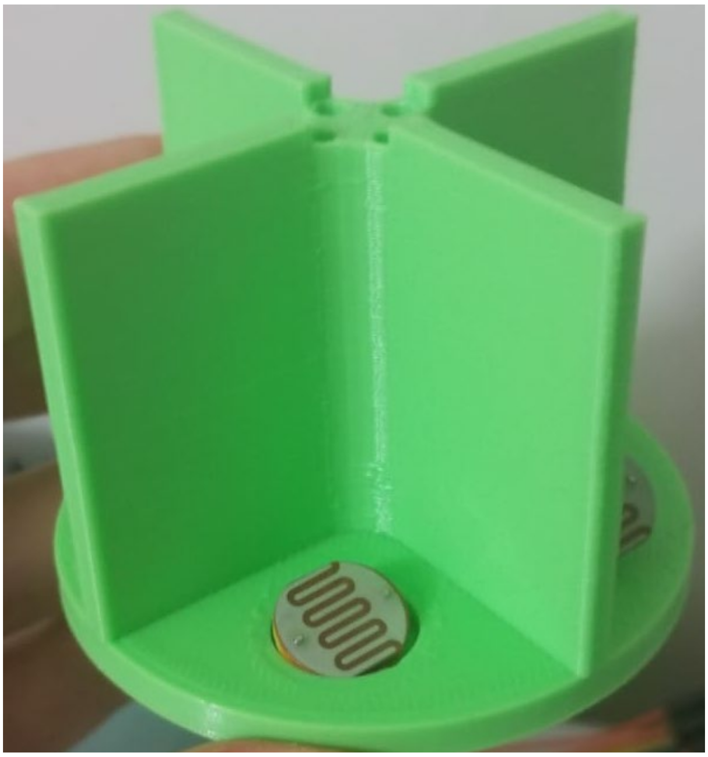

**Figure 5.5** 3D Printed LDR Holder First Version

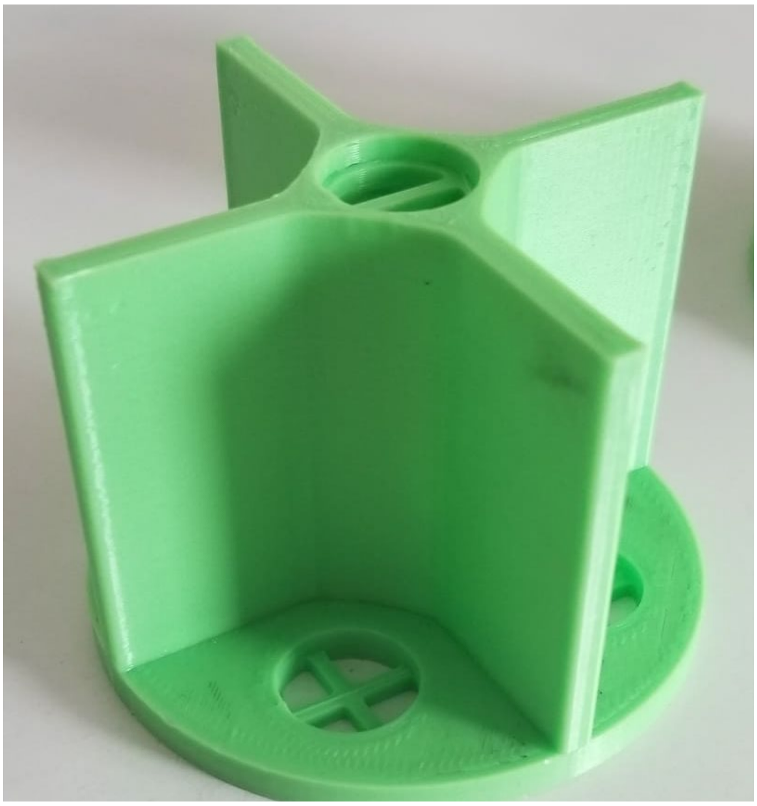

**Figure 5.6** LDR Holder Second Version

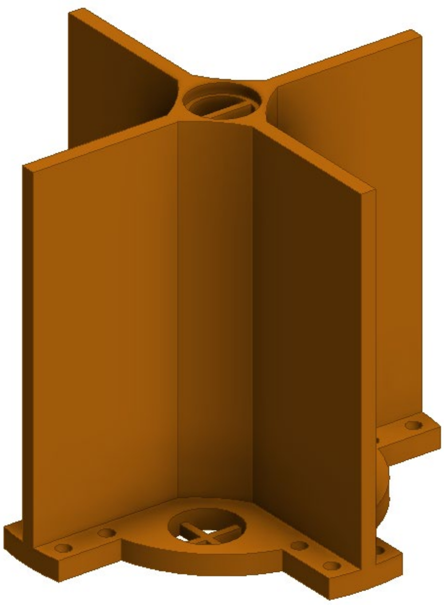

**Figure 5.7** LDR Holder Third Version

**Table 5.7** Differences between LDR Holder versions

| | **Version 1** | **Version 2** | **Version 3** |
|---|---|---|---|

| | | | |
|---|---|---|---|
| **Length of LDR Holder** | 45mm | 45mm | 75mm |
| **The reason for the change** | In this version it was impossible to carry the cables of reference LDR to top to bottom and because of the very small size of cable shaft. | We had to increase ethe length of LDR Holder and increase the wall size to increase the shadow drop on the sensors to increase the threshold voltage. Because the sensors are not sensitive and accurate enough this change was needed. | Last version not changed yet, working as intended. |
| **The change** | The design of where we put the LDRs are changed and the cable shaft is redesigned to increase the size. | Wall size and length of the LDR Holder is increased to increase shadow drop. | |

#### 5.2.1.2. Dual Axis Sun Tracker

This is the mechanism which will be used to move the system in X and Y axis. With this mechanism lens will be always perpendicular to the sun so that efficiency will be increased. There are lots of different mechanism to achieve tilt and pan motion in the solar panels, some of them are for heavy load, some of them are for very small panels etc. In our product we will produce this sun tracker using 3D printed parts, ball bearings and step motors. The most important detail about this mechanism is the if the mechanism can lift the system from zero to 90 degree in Y axis. Because this movement requires heavy load, and we need to carefully pick our step motor and step motor driver. With the 90-degree in Y axis and 360-degree movement in X axis is means that we are capable of tracking the sun in whole year. [19]. In the Figure 5.8 this movement can be clearly seen.

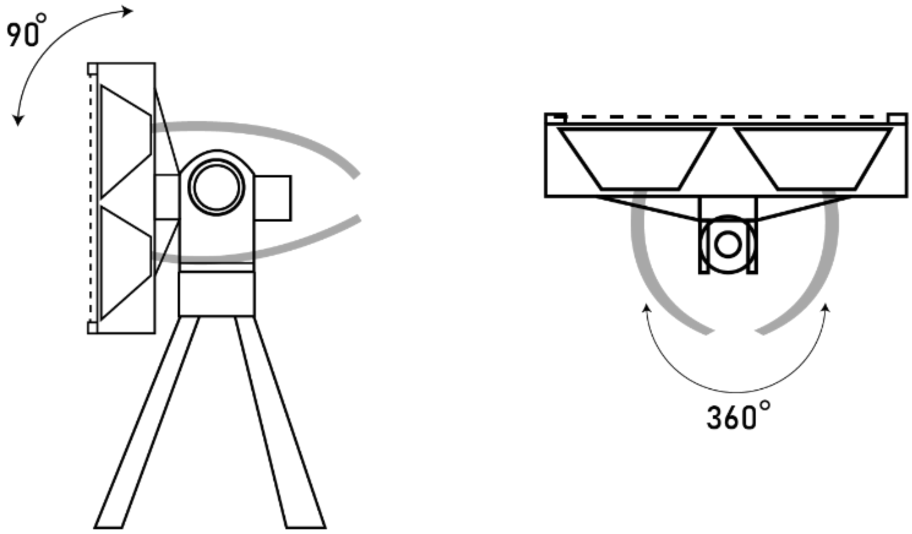


**Figure 5.8** 90° in Y, 360° X Movement capability

In this mechanism we are going to use the Bipolar NEMA 17 200 step motor and TB6600 Motor driver for both X and Y axis. This step motor has a 3.7 kg-cm holding torque and with the reduction in gears this torque will be enough for us. In the Figure 5.9 the mechanism itself, gears and gear ratios can be clearly seen. Mechanism itself is redrawn by using the mechanism made by Eyal Abraham in GrabCad [32].

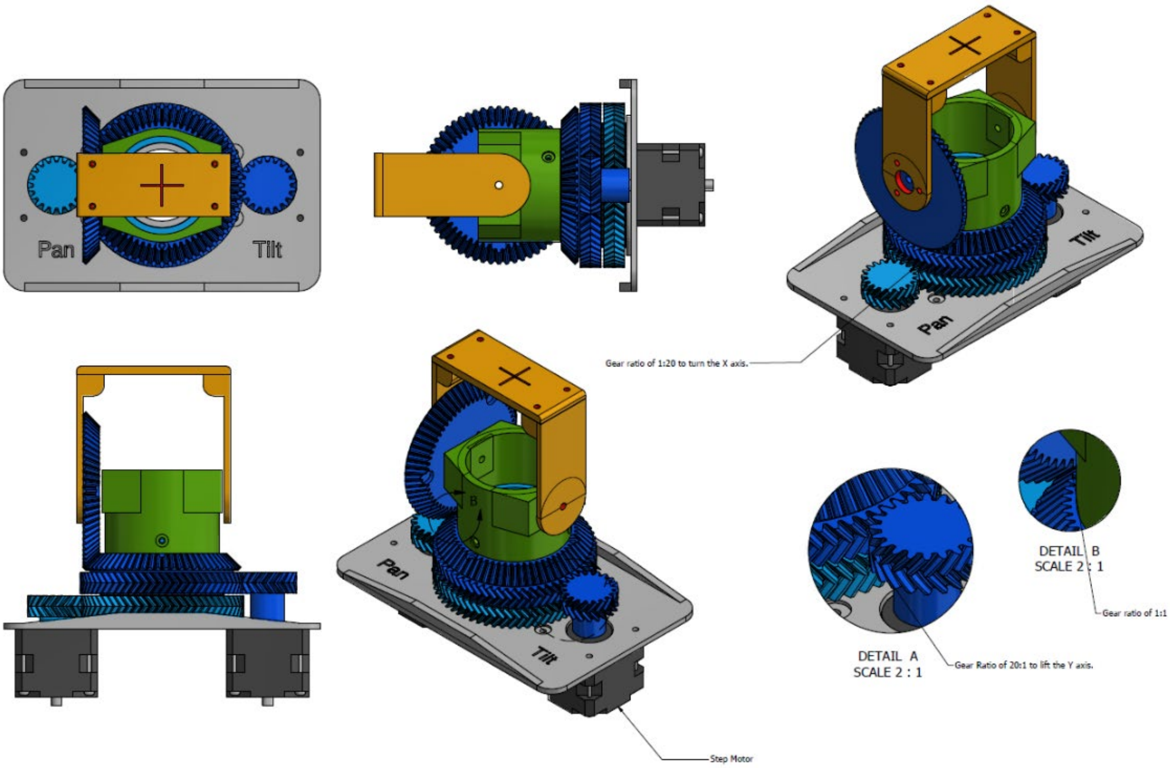


**Figure 5.9** Dual-axis sun tracker

For the mechanism all connections, bolts and nuts are selected as the 3M bolts with different height according to the place. For the bearing part 3MM bearing balls are used. From the Figure 5.10 you can see the 3D Printed mechanism. For the shaft, a 100mm 3mm bolt is used. In the Figure 5.10 all the individual parts for the dual-tracker mechanism can be seen. The assembled version of the whole design can be seen in the results page.

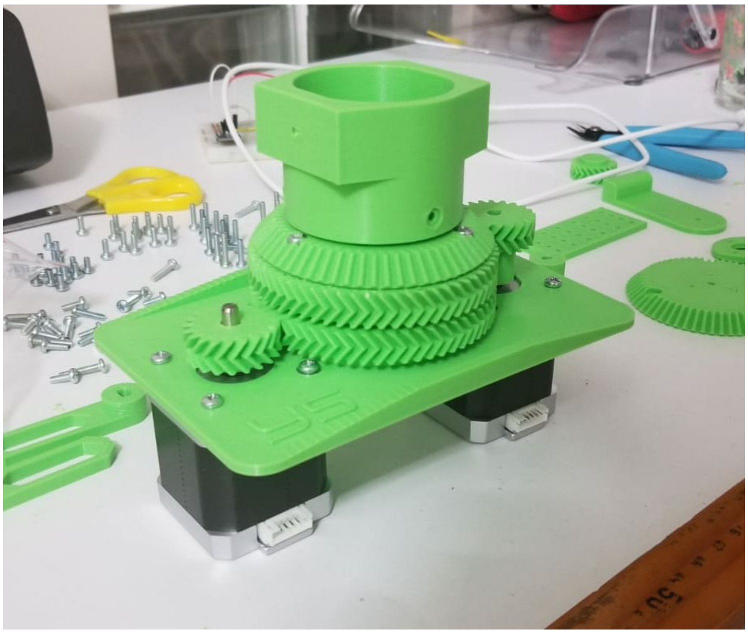

**Figure 5.10** 3D Printed Dual-Axis Printer

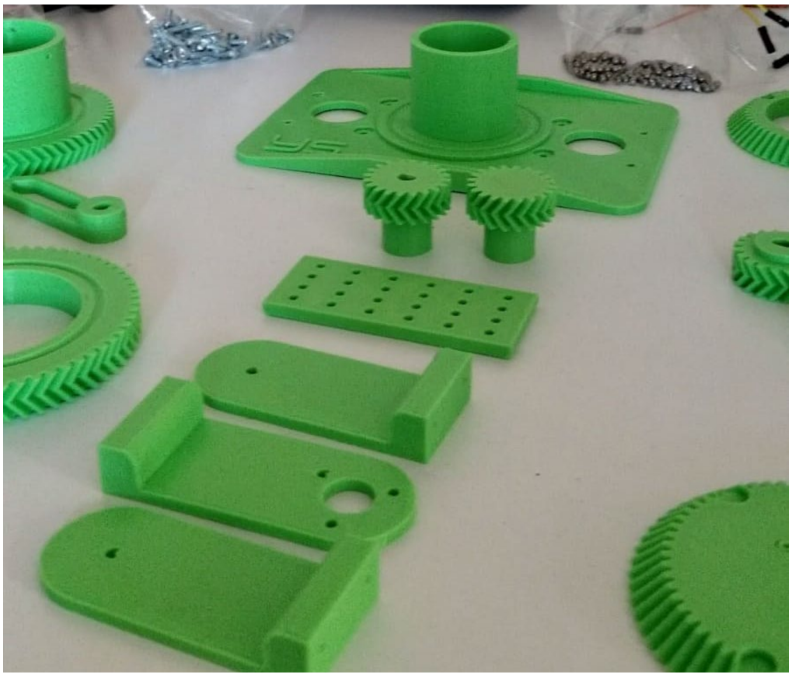

**Figure 5.11** 3D Printed parts of the dual axis tracker

### 5.2.1.3. The Sun Collector

This is the part we are focusing the sunlight into the fiber optic cables using Fresnel lenses or Convex lenses. When we get the product we will make the required measurement to decide which is better in terms of light gathering capability. Fresnel lenses are used in lighthouses whereas convex lenses are used in magnifiers. If we are going to use Fresnel lenses the size of them will be 70mm in diameter, 60mm in focal length with 2mm in thickness. For the convex lenses, the size will be 63mm in diameter, 60mm in focal length with 4mm in thickness. How much light the Fresnel lenses or convex lenses can collect will be understood when we take the required measurements.

Lenses will be placed in 2x2 array in right and left part of the system. Total number of lenses will be 8 in the sun collector. In the Figure 5.12, the placement of the lenses, the connections and other parts can be clearly seen.

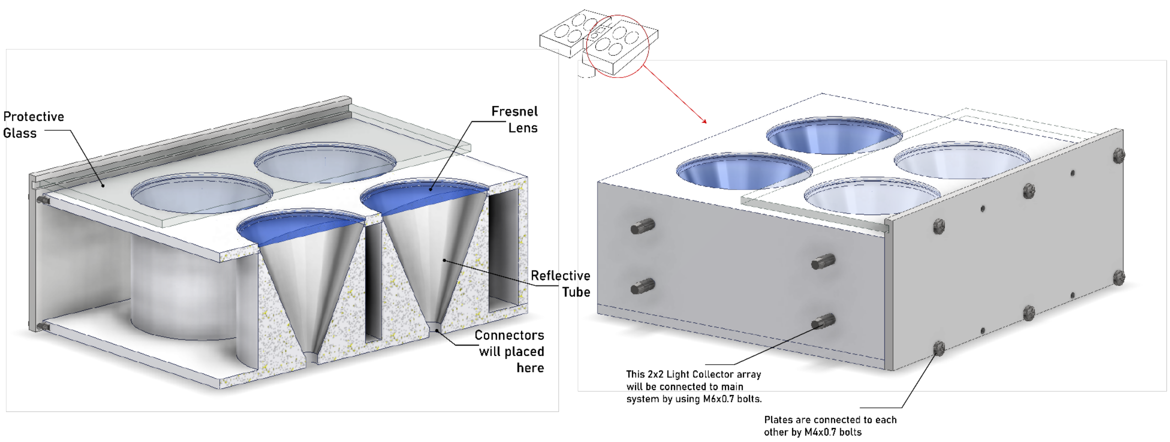


**Figure 5.12** Sun collector one side

After our research, trial, and error we have decided to use Fresnel lenses with the specifications of 70mm in diameter, 80mm in focal length and 2mm in thickness. Below the Figure 5.13 you can see the Fresnel lens that we have decided to use. In the Figure 5.14 you can see our new design for the lens holder. Even tough previous design allows us to gather more light new design is much simpler to produce and test our results that is why have decided to go with the new design. The explanation for this decision can be found in the result part of the report.

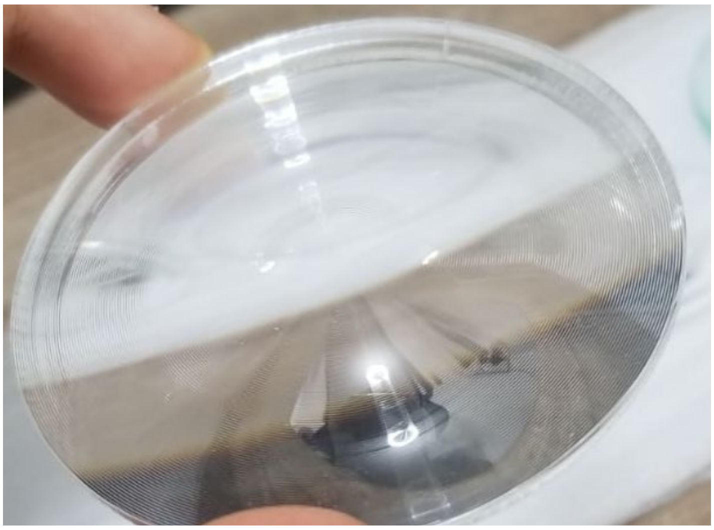

**Figure 5.13** Fresnel lens with 70mm diameter

The new design or as we call it test design can be easily produced and tested and can be seen in the below Figure 5.14 and Figure 5.15. First one is the CAD, and the second one is 3D Printed and assembled with the lens.

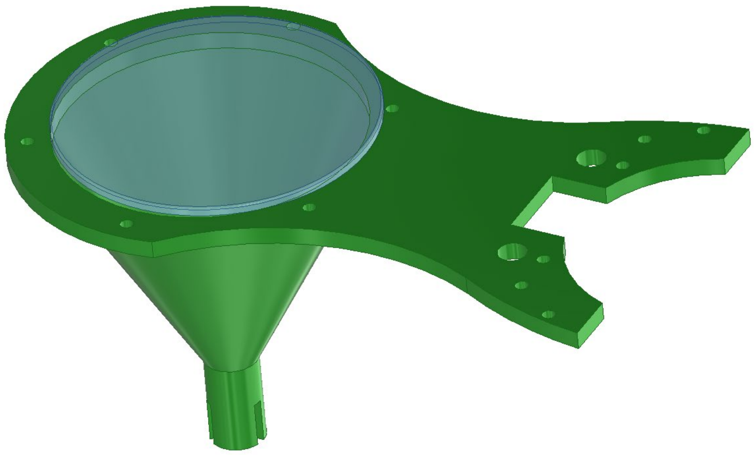

**Figure 5.14** Lens Holder Test Design

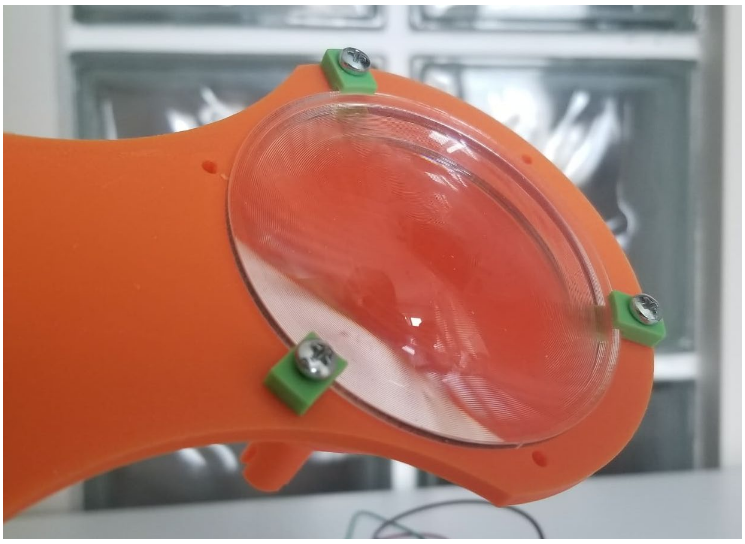

**Figure 5.15** 3D Printed Lens Holder Test Design

## 5.2.2. Light Transfer System

### 5.2.2.1. Fiber Optic Cable

There are two types of fiber optic cables, silica optical fibers (SOFs) and plastic optical fibers (POFs). Even though SOFs are very good at transmitting the light they are expensive for our solution so will prefer using POFs. The core diameter of our fibers will be 5mm with outer diameter of 7mm made from PMMA. They have an attenuation value of 0.45dB/m, so it will be suitable for our project. Also, the cable we are going to use will have a minimum bend radius of 50mm. Tow cables and two lenses will be connected to the one light point to increase the illuminance in the room.

For the Fiber Optic Cable, we decided to use inner diameter 5mm outer diameter 7mm PMMA cable. Below the Figure 5.16 you can see the cable. The explanation for this decision can be found in the result part of the report. When we tried the cable, we have found that it is capable of transferring the sunlight, but further research is required with the use of Lux meter to determine the effectiveness of the cable.

**Figure 5.16** PMMA Fiber Optic Cable 5mm*7mm

#### 5.2.2.2. Fiber Optic Cable Connectors

Connectors will be used to calibrate the placement of the fiber optic cables. Because those focal points of the lenses are not exactly 70mm we need such a connector. Also, with these connectors we will be able connect the fiber optic cables to the system. In left part of the Figure 5.17 we can see the fiber optic cable connectors, this picture is taken from a producer. In the right part of the Figure 5.17 we can see where they should be connected.

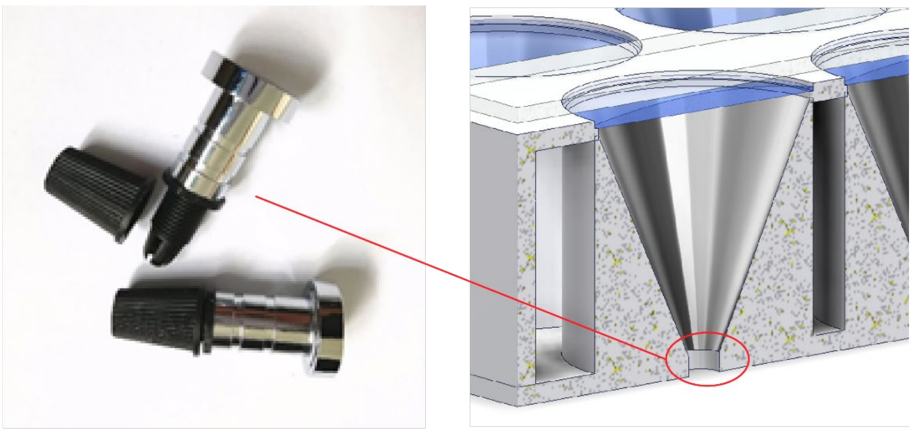

**Figure 5.17** Location of the fiber optic cable connectors

### 5.2.3. Light Point System

This system will be placed in the ceiling or the walls to bring light from the outside to inside. It consists of two parts first is LED and second part is light diffuser. These are connected via 3D printed parts. Light point is like the reversed sun collector. Lens, collector, and reflective tube is the same the only difference is LED, and bolt holes are added. We will measure the effectiveness of the light point and fiber optic cable by measuring the illuminance. Illuminance difference in terms of lux between the entry and light point will give us the efficiency of the system. In the Figure 5.18 you can see the light point and parts of the light point like LED Strip and lens.

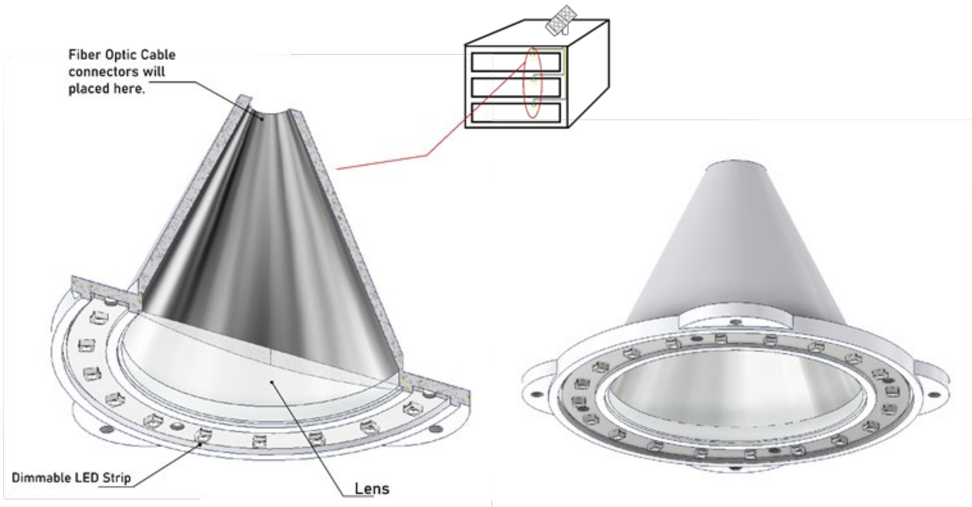


**Figure 5.18** Light point

## 5.3. Communication and Data Handling Subsystem

### 5.3.1. Communication and Data Handling Overview

#### 5.3.1.1. Microcontroller side of the communication and data handling

- Sending the data

To send the data, first we are acquiring the measurement coming from sensors then we start a TCP connection with the server. Later we combine the values in one JSON packet and add the specific API key. This key is unique for every product so that we can monitor each system individually. Then we make a HTTP POST request to the server and wait for the server response, if the server gets the data response will be OK.

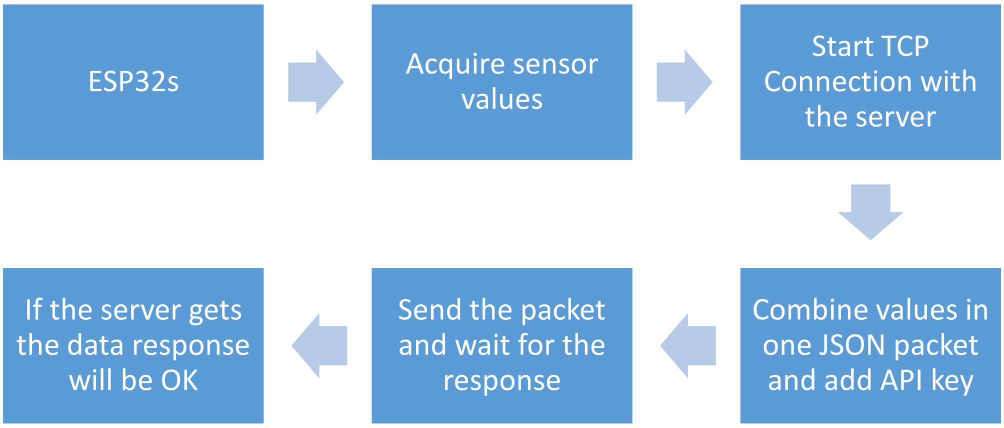


**Figure 5.19** Sending the data from the ESP32s to server algorithm

- Getting the data

Getting the data is more complicated than the sending the data, because that using HTTP GET to get the full data will consume more energy and will result in high response time, that is way we make GET request to the specific URL contains API key. If the UPTADE flag is one in that URL it means that something is changed, and user wants to do something it can be dimming the LED or resetting the system etc. So ESP32 again make a GET request to get all the information and POST a response and makes the UPTADE flag zero. It will mean that ESP32s got the data, made the necessary changes and now it is waiting for another update

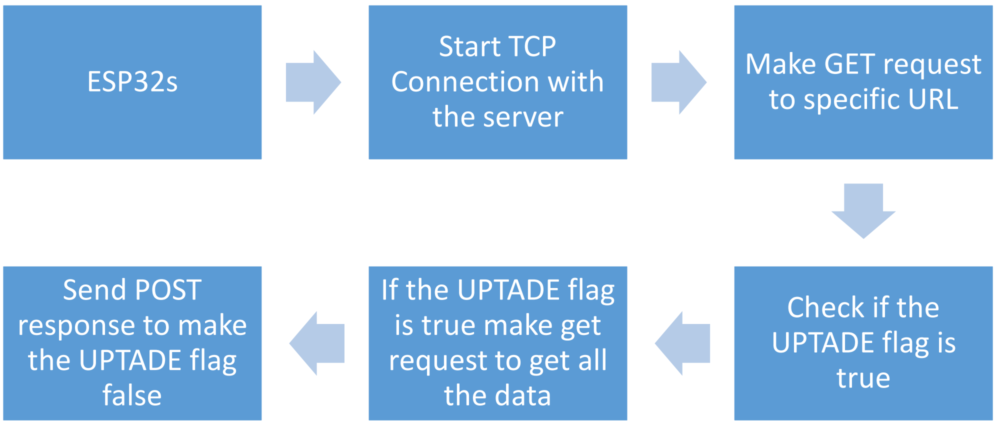


**Figure 5.20** Getting the data from the server into ESP32s algorithm

#### 5.3.1.2. Server Side of the Communication and Data Handling

- Getting the data

To get the data from the server side we check if a POST request is made or not, if it is made we check the API key and by using this key we send and save the data to that specific database. Every product has different databases so that we can monitor each product individually.

Company or an admin can see all the products specification, but consumer can only see his or her product.

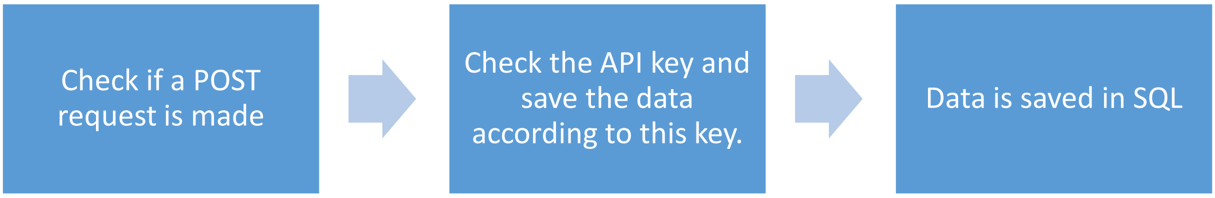


**Figure 5.21** Getting the data from ESP32s to server algorithm

- Sending the data

To send the data from website to specific ESP32s first we check if a request is made from the user this can be dim the LEDs or reset the system etc. and we save this data to the SQL and make the UPTADE flag one. ESP32s will see that UPTADE flag is one and will make GET request to the server to get all the information. And will return a response, according to the response the server side will make the UPTADE flag zero and will wait for another update request from the user. We are doing this because we do not want to send the same data repeatedly, we are just sending the update flag which way more efficient.

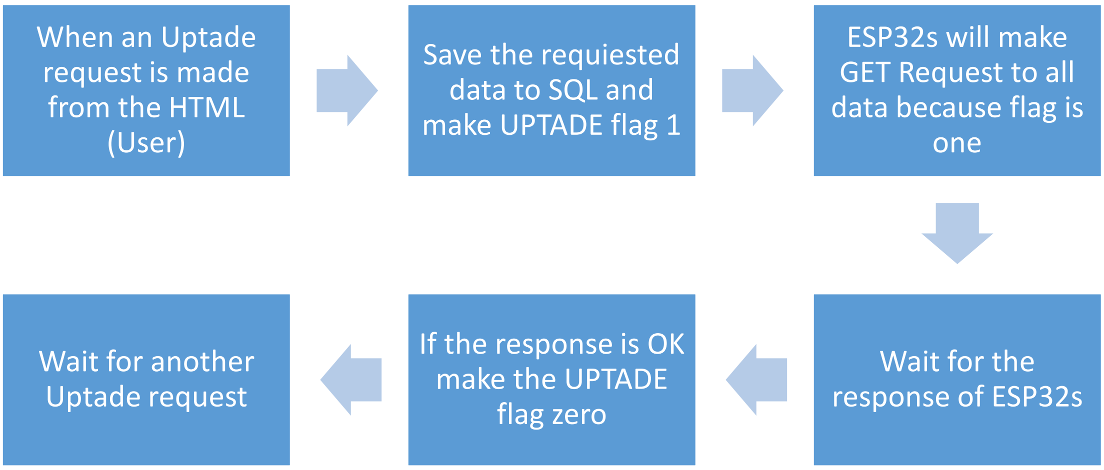


**Figure 5.22** Sending the data from server to ESP32s algorithm

**To summarize**, all the communication step, first we have two side of the communication first side is the microcontroller side and other side is server side which as we call monitoring system. These two systems can both get and send the data. If the ESP32s is sending the data we are using POST method of HTTP, if we need data we are checking if update flag is one or not. If it is one we get all data required to do what user wants. If the update flag is not one we are not getting the data. In the server side when a POST request is made from ESP32s we classify the information according to the specific API key and save the information to the SQL database. When we want to update something in the microcontroller side, we make the update flag one and save the data in SQL database which ESP32s will read.

### 5.3.2. Json Formats

**Table 5.8** Json formats of the data

| Post Request to the Server | Get Response from the Server (1 is on) |
|---|---|
| {<br>"time":"09:28",<br>"date":"27.11.2020",<br>"apiKey":"AZD124",<br>"luxValue":35000,<br>"esp32Temp":"28.2",<br>"dht11Temp":"29.0",<br>"bmp180Temp":"31.2",<br>"humidity":35,<br>"airPressure":386,<br>“LDR1”: 80<br>“LDR2”: 80<br>“LDR3”: 50<br>“LDR4”: 40<br>“LDR5”: 32<br>"ledPercentage":20,<br>"rainPercentage":0,<br>"errorCode":"404",<br>} | {<br>"time":"09:28",<br>"date":"27.11.2020",<br>"apiKey":"AZD124",<br>"isReset":1,<br>"isManuelLedOn":0,<br>"ledValue":30,<br>"sendDebugData":1,<br>"isSunTrackingOn":1,<br>} |

In the JSON Formats the LDRs are changed from arrays to the normal integers from LDR1 to LDR5 because of it is simplicity to use and no requirement are needed for an array. It is much simpler to send and read in this format.

### 5.3.3. Overview of the microcontroller ESP32s

In the Figure 5.23 below, you can see the inputs and outputs pin for the ESP32s microcontroller. In the project we will be using the development card to program test our system. The chip itself can be implemented with the PCB later. In the Table 5.8 the specifications for the ESP32-WROOM-32 development board can be seen.

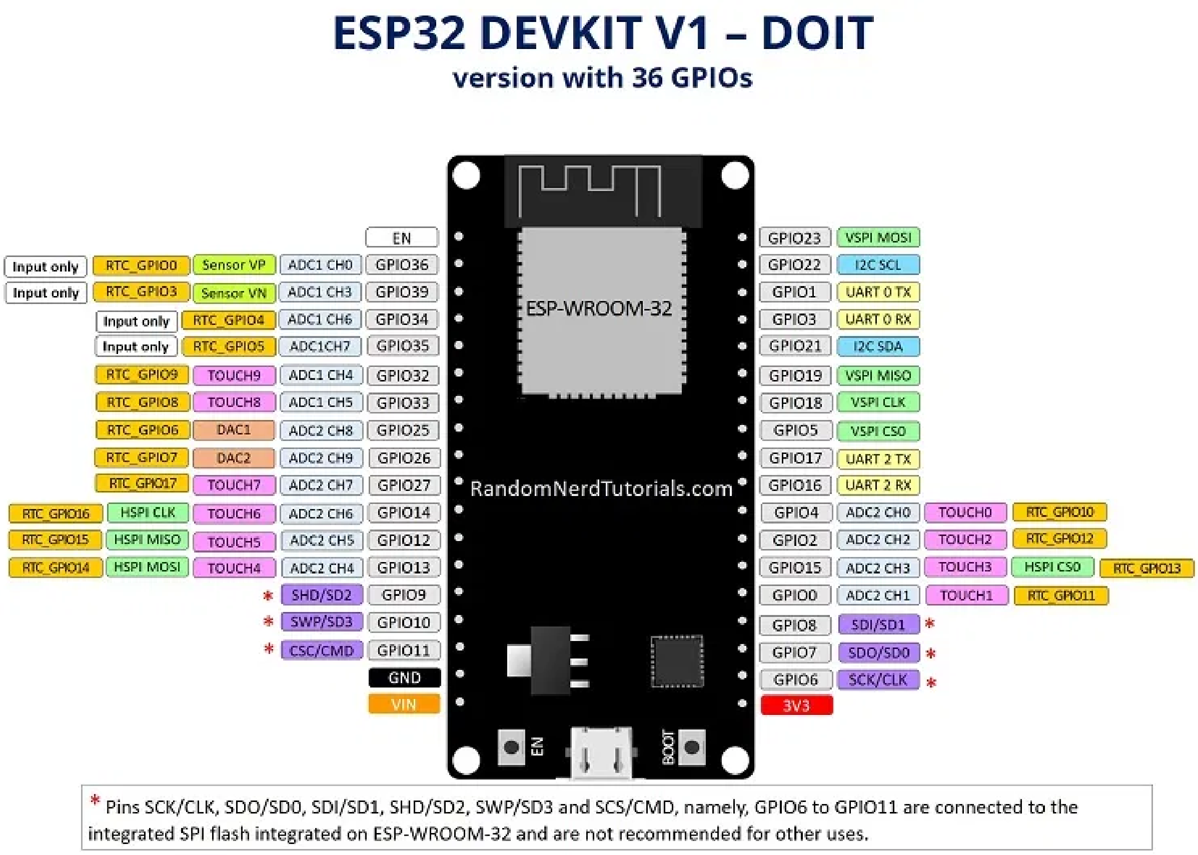


**Figure 5.23** ESP32 Devkit Pin Layout

**Table 5.9** ESP32s specifications

| | |
|---|---|
| **Model Name** | ESP32-WROOM-32 |
| **Number of cores** | 2 (dual core) |
| **Wi-Fi** | 2.4 GHz up to 150 Mbits/s |
| **Bluetooth** | BLE (Bluetooth Low Energy) and legacy Bluetooth |
| **Architecture** | 32 bits |
| **Clock frequency** | Up to 240 MHz |
| **RAM** | 512 KB |
| **Pins** | 30 or 36 |

| | |
|---|---|
| **Peripherals** | Capacitive touch, ADC (analog to digital converter), DAC (digital to analog converter), I2C (Inter-Integrated Circuit), UART (universal asynchronous receiver/transmitter), CAN 2.0 (Controller Area Network), SPI (Serial Peripheral Interface), I2S (Integrated Inter-IC Sound), RMII (Reduced Media-Independent Interface), PWM (pulse width modulation) |
| **Price** | 75₺ |

- We have selected the ESP32s because it has both fast and easy to impellent Wi-Fi and Bluetooth properties.
- ESP32 is capable of functioning reliably in industrial environments, with an operating temperature ranging from –40°C to +125°C. Which makes it very conventional for us to work because where it is located can be very cold or very hot according to the climate.
- The clock frequency can go up to 240MHz and it has a 512 kB RAM, so it is fast enough to make GET and POST request when immediate results are required.
- Ultra-low power co-processor allows us to do ADC conversions, computation, and level thresholds while in deep sleep. Energy efficiency is especially important for us because our aim is to consume less energy and ESP32s will allow us to do this.
- It is price is less than 100₺ which is very cost efficient compared to other microcontrollers.

## 5.4. Electrical Power Subsystem

### 5.4.1. Electrical block diagram

In the Figure 5.24 below the power connections and regulators can be easily seen.

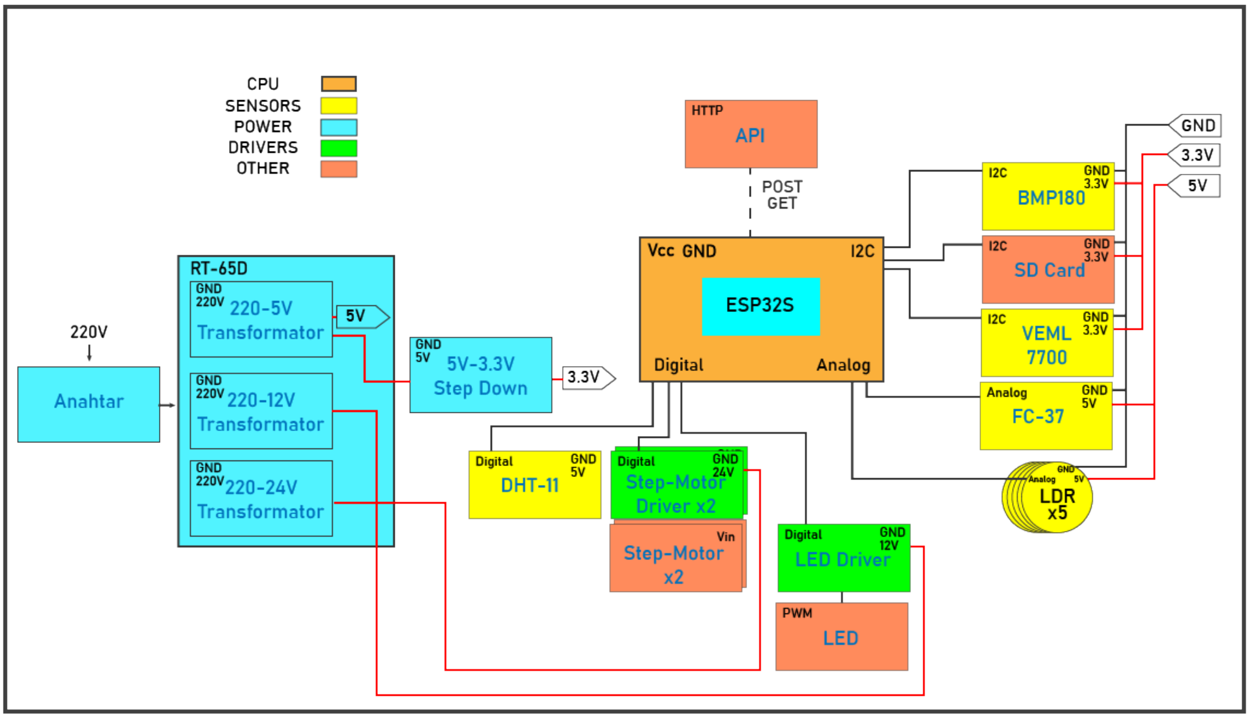


**Figure 5.24** Electrical block diagram

In the below Figure 5.25 you can see the schematics for the Step motors, step motor drivers, ESP32s, Air Pressure Sensor BMP180, VEML7700 Lux Sensor, Temperature sensor DHT11 and LDRs. Note that this schematic does not include Power part, FC-37 rain sensor and SD Card.

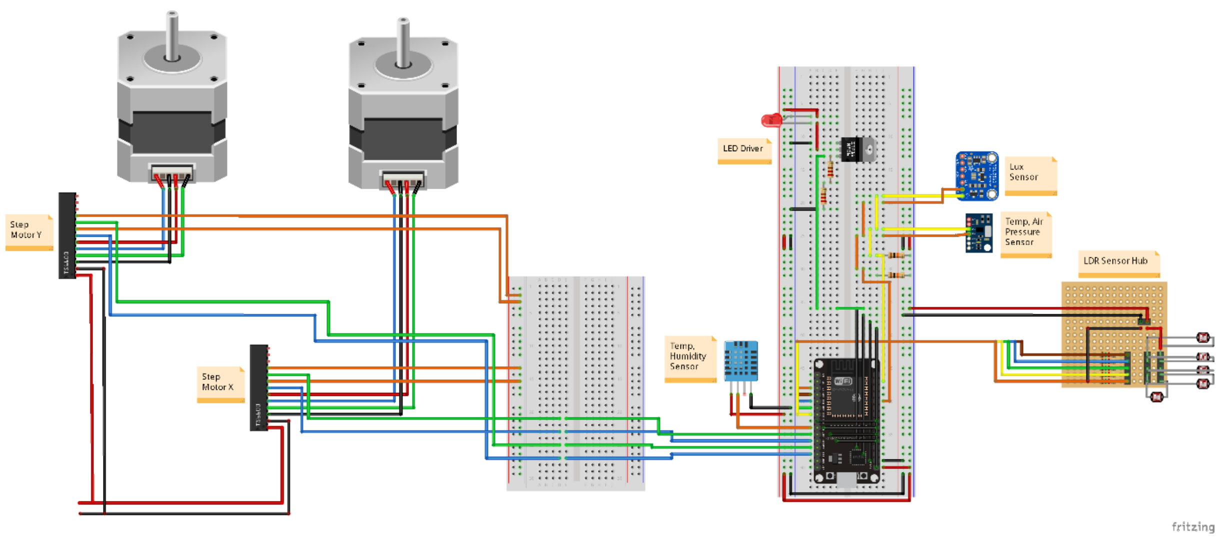


**Figure 5.25** Schematic of the whole circuit made in Fritzing

In the below Figure 5.26 you can see the schematic for driving the LED with MOSFET. For this version of our research and product we have decided to use MOSFET instead of LED Driver. Instead of driving the LED directly with ESP32s we are using MOSFET to get the power from the power supplier and using PWM to open and close MOSFET to drive the LED. In the Figure

5.27 you can see the implementation of this circuit in the breadboard. It is a very small but very efficient and easy to use circuit.

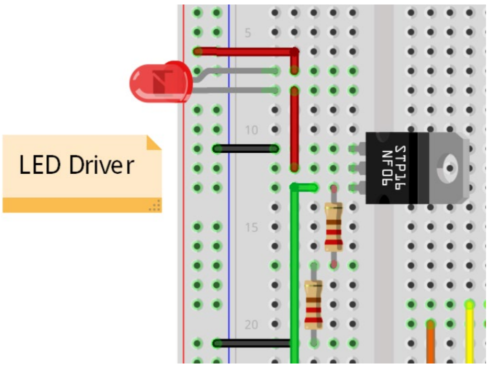


**Figure 5.26** Driving LED Using MOSFET Circuit Diagram

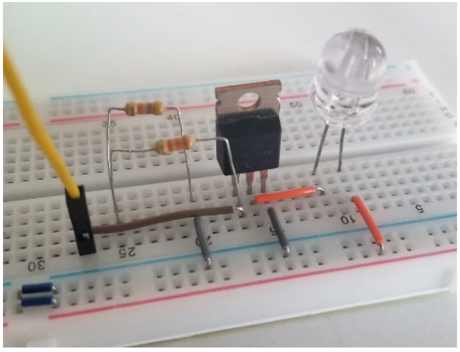

**Figure 5.27** Led Driver Circuit Using MOSFET on Breadboard

## 5.5. Lower-Level Software (Microcontroller Side) Subsystem

### 5.5.1. Overview of the lower-level software

The main thing our software architecture will do:

The ESP32s located in the main chamber of our product will take the data from the sensors located in the sensor chamber and send them monitoring system and save them in the SD Card. Also, it will read the measurement coming from the sun-tracker sensors and will apply some filters and do some mathematical calculations, later by using these values it will drive the step motor- drivers and our system will track the sun.

Things will microcontroller software do:

- Connect to the server via Wi-Fi
- Read the measurement results from the sensors
- Save these measurement values in the SD Card and send them to server via HTTP
- Send necessary information to the step motor drivers so that system can track the sun.
- Get information from the server and update itself according to what user wants.
- By using the measurement values coming from Lux sensor dim the LEDs it is connected.

We are using C language using the Arduino IDE on the ESP32s with these libraries.

- <ArduinoJson.h> - Using to create JSON format data.
- <WiFi.h> - Using for connecting to the WiFi.
- <HTTPClient.h> - Using for sending the information to web server.
- <SparkFunTSL2561.h> - Using for lux Sensor.
- <MS5x.h> - Using for air pressure sensor.
- <Wire.h> - Using for I2C.
- <Ewma.h> - Exponentially Weighted Moving Average. Using this to smooth the LDR data in sun tracker sensors.
- Libraries of each sensor.

In the lower-level software we were writing all the code in to the one file, one tab in the Arduino IDE. Currently code is divided to multiple tabs and multi file architecture is supported with the usage of connection headers. We also use classes to impellent this. From the below figure 5.28 we can see this architecture.

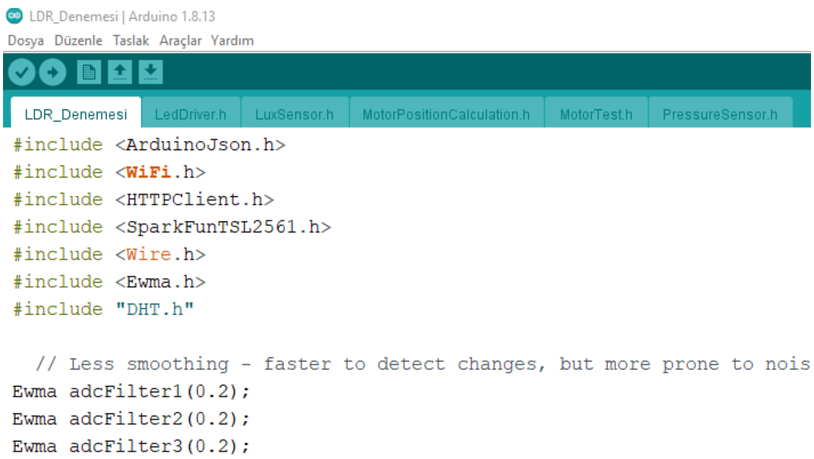


**Figure 5.28** Multi-file system

### 5.5.2. State diagram of the lover level software

In the Figure 5.29 state diagram of the software which will run in the ESP32s can be seen. Also, the sun tracking algorithm can be seen in the Figure 5.30

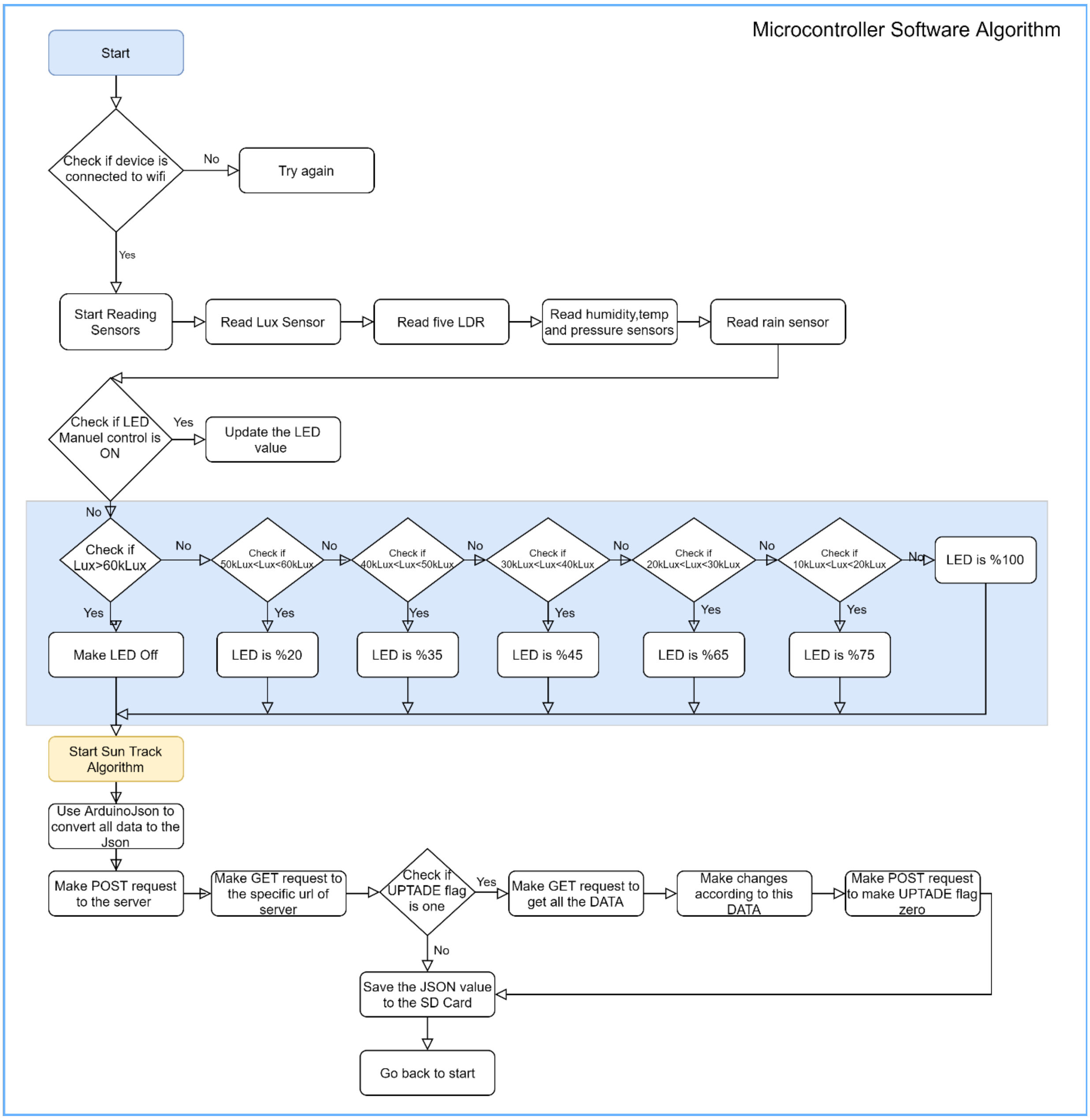


**Figure 5.29** State diagram of the ESP32s software

Sun Tracker algorithm is one of a kind of algorithm according to our literature research. The best thing about this algorithm is that first of all we are using reference LDR and averaging the five LDR value by dividing the sum of them to five. By determining threshold error, we can easily determine when should motor stop. According to our trials the 12% is the value that provide us a good balance between stop and run. The reason we are using a threshold voltage by averaging the five LDR is that because the intensity of light changes during the day. This application makes the system robust in both sunny days and cloudy days. Also, the step motors only move when the error voltage value becomes greater than the threshold voltage thus making the system power efficient.

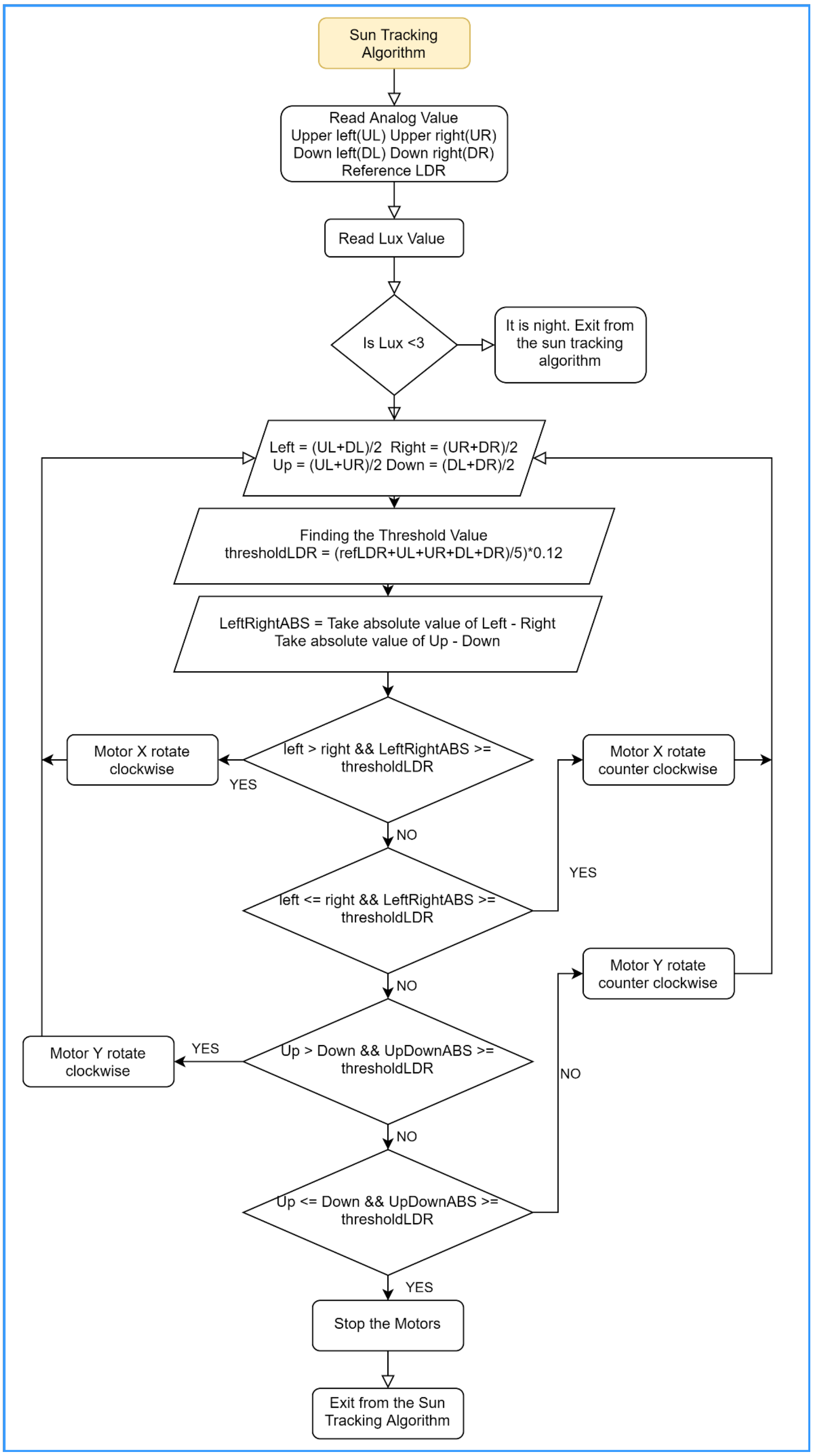


**Figure 5.30** Algorithm diagram of Sun Tracker

## 5.6. Higher Level Software (Server Side) Subsystem

### 5.6.1. The purpose of higher-level software

- In our monitoring system user can be able to check their products, check if their product requires maintenance and how much does he save by using this system.
- User will be able to manually control his or her products, can manually change the value of LED or deactivate the tracking system.
- User will be able see the temperature, air pressure, humidity, rain sensor and lux value in graphical way.
- User will be able to see the system as a weather situation.
- User will be able to see if there is a problem with his or her products.
- Company will be able see all the products that they sold.
- Company will be able see if a product needs maintenance or not.
- Company will be able see if their products are working correctly or not.

### 5.6.2. The architecture of higher-level software

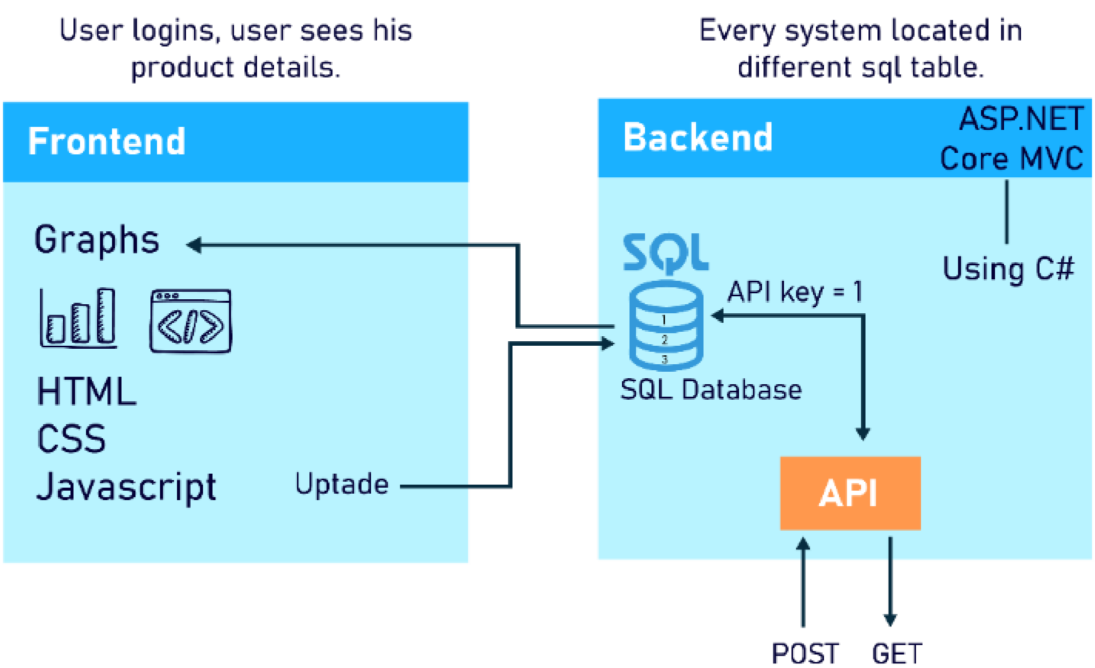


**Figure 5.31** Architecture of higher-level software

- Frontend of the website will be written in HTML,CSS and JavaScript whereas backend will be written in C# using the ASP.NET Core 3.1.8 Architecture. This architecture can be seen from the figure 12
- We will be using the Microsoft Visual Studio Community because it is very compatible with the ASP.NET Core
- In the front end of the website, we will be using HTML to render the page and CSS to make it prettier, JavaScript will help us to render the graph in real time. Source code files will be connected with HTML of the page.
- Graphs will be connected to databases through source codes, according to the User and his products source codes will get the data.
- When a POST or GET request is made source code will process them and get the data from the SQL database.
- Site will be launched in the server with its own domain name so that other people will be able to access it. We are going to buy both domain and hosting.

By using the architecture, we have mentioned we have managed to implement our higher-level software. Currently we can get information from the ESP32s, save them in a database and show them to user in both table and graphical format. Also, by using the git and GitHub now we are currently developing our software by using version control software. This makes us write code more efficiently and go to previous versions if needed. From the GitHub it is easy to check the higher-level software. In the below Figure 5.32 you can see the graphical interface of our website. Also, in the previous versions of the software we had to send request and get all the response from the database and show them in the graph each second currently we get the latest updated row from our database with each request. This hugely improve the performance of our website.

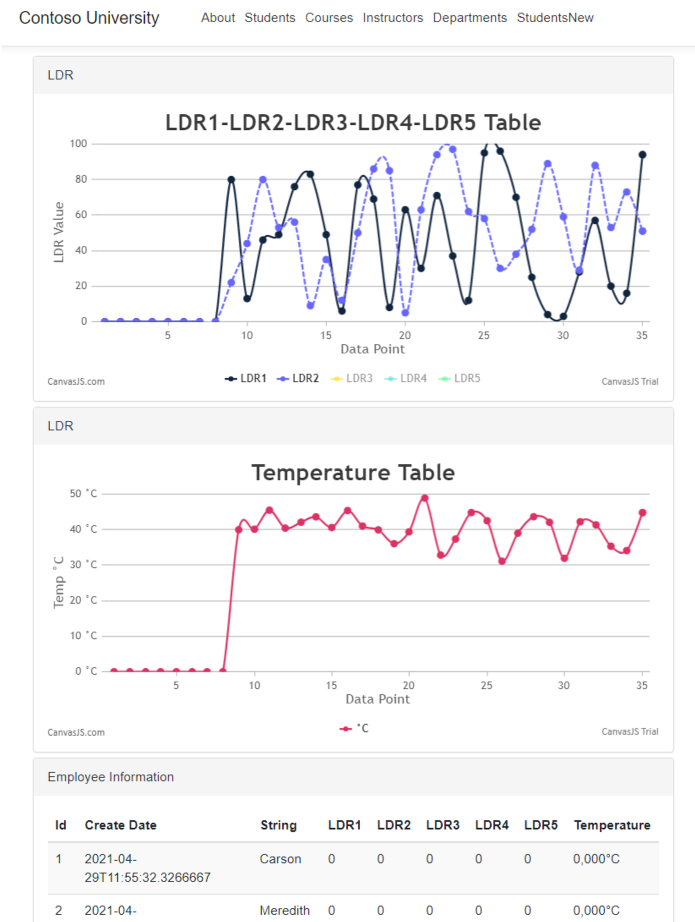


**Figure 5.32** Website showing the Graphs and Database

In the graphs we use library provided by CanvaJs. With the CanvaJs library it is very easy and efficient to draw graph, we just need to provide data and specifications of the graph and it is automatically drawn. We do not require to design the graph from scratch using CSS. The code for the graph algorithm can be found in the Appendix.

# 6. RESULTS AND DISCUSSION

For the result and discussion part we will divide our research to the three different parts. Because that the physical version of our research is not finished and the product itself is not realized the results depends on the research we have done and simulations. As we said in the sub-problems part of the thesis the most complicated problem was choosing the lenses.

## 6.1. Choosing the lenses

**Table 6.1** Lens options

| | Lens Option 1 | Lens Option 2 | Lens Option 3 | Lens Option 4 | Lens Option 5 |
|---|---|---|---|---|---|
| **Diameter** | 100mm | 40mm | 63mm | 70mm | 40mm |
| **Focal Length** | 90mm | 50mm | 100mm | 60mm | 40mm |
| **Type** | Convex | Convex | Plano Convex | Fresnel Lens | Fresnel Lens |
| **Material** | Glass | Glass | Glass | PMMA Plastic | PMMA Plastic |
| **Number for one light** | 1 | 2 | 2 | 2 | 2 |
| **Total number on system** | 4 | 8 | 8 | 8 | 8 |
| **Light output number** | 2 | 4 | 4 | 4 | 4 |

To choose the lenses first we have started with the five different options. In the first option we are trying one large lens to deliver light. We had to eliminate this option because using one large lens is creating so much heat that fiber optic cables begin to burn. In our literature research there were solutions like using bigger transfer holes, complex connections between focal point of the lens and fiber optic cable bundles and using reflective mirror hallway to transfer the light. In our solution we have decided to use smaller lenses to overcome this problem. We had to eliminate the option 2 and option 3 because of the weight. The glass material makes the lenses heavier than the plastic material thus bringing extra load to the sun tracker mechanism and step motors. For the option 4 and 5 because that 40mm is too small to gather enough sunlight the option five is eliminated too. According to the literate research 3 the 300mm was optimal choice of lens to illuminate one room providing 105000 lux illuminance. Because of the heat we cannot use that so by combining 70mm+70mm diameter of lens we will be reached 140mm diameter of lens thus providing enough illuminance. When we tried this combination in the simulation program WinLens 3D, from the Figure 6.2 below we can examine that putting only one lens to the exit point does not diffuse the light that is way a diffuser is needed at the output of the light point for illuminate the room equally. In the simulation the 2 lenses are Fresnel Lenses, and the one glass block is the production glass.

Because that simulation did not have fiber optic cables we directly connected input and output lenses.

In the below Figure 6.1 we can see each different lenses in detail. We have tried each of them and found that the best choice is a Fresnel Lens with 70mm diameter because of the same principles that we told previously.

**Figure 6.1** Different Lens Types

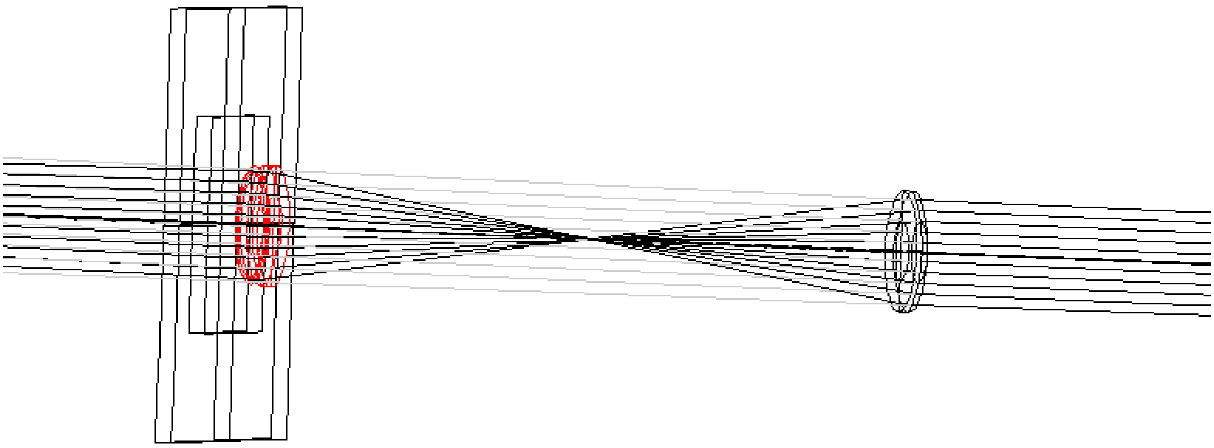

**Figure 6.2** WinLens3d Simulation

## 6.2. Choosing the Fiber Optic Cables

**Table 6.2** Fiber optic cable options

| | **Option 1** | **Option 2** | **Option 3** | **Option 4** |
|---|---|---|---|---|
| **Inner Diameter** | 1mm | 0.75mm | 2.0mm | 5.0mm |
| **Outer Diameter** | 1mm | 0.75mm | 3.8mm | 7.0mm |
| **Type** | PMMA Fiber Optic Cable | PMMA Fiber Optic Cable | PMMA Fiber Optic Cable | PMMA Fiber Optic Cable |
| **Material** | Plastic (No Coating) | Plastic (No Coating) | Plastic (Black Coating) | Plastic (Black Coating) |

If we examine the options we have for the fiber optic cables option 1 and option 2 are eliminated because of the small inner diameter. Creating a bundle for fiber optic cables and focusing the light into them decreases the efficiency. In the Figure 6.3 below this can be easily seen. Option 3 is eliminated too because of the small inner diameter means the light focuses into the 2mm diameter circle instead of 5mm diameter circle thus creating more heat in that particular point. That is way option 4 will be used**.**

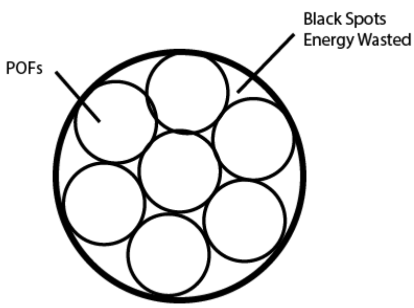


**Figure 6.3** Slice of POF bundle

## 6.3. Design of the Sun Tracker Mechanism

In the Figure 6.4 and Figure 6.5 the design we have made in the Autodesk Inventor can be clearly seen. Also, in the Figure 6.6 and Figure 6.7 the 3D printed and assembled version of our design can be clearly seen.

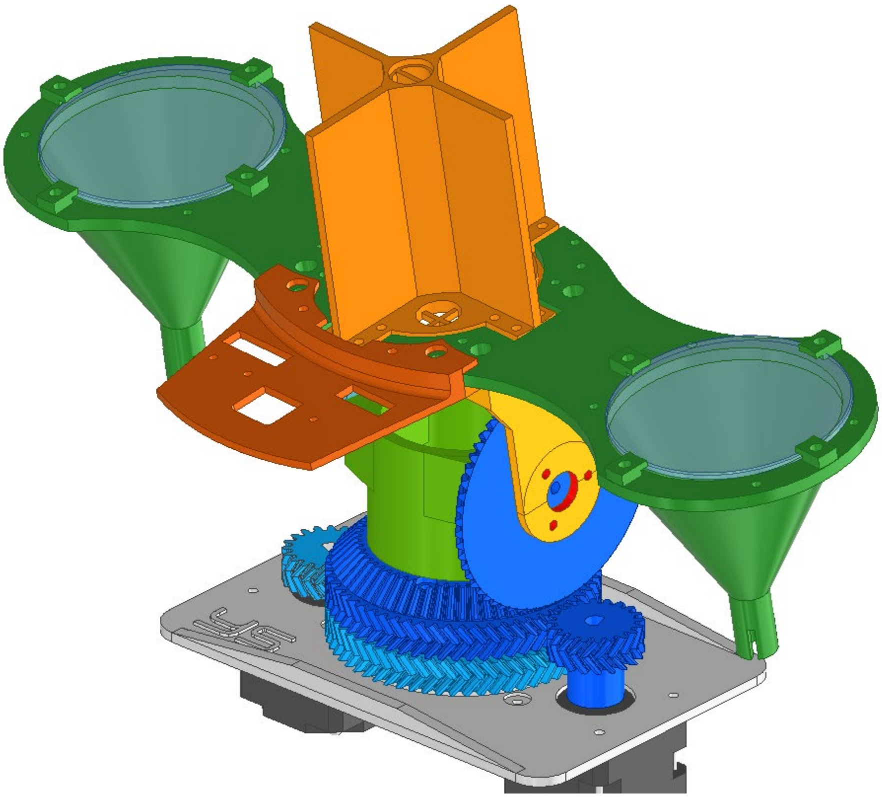

**Figure 6.4 Most recent test version of the CAD Design**

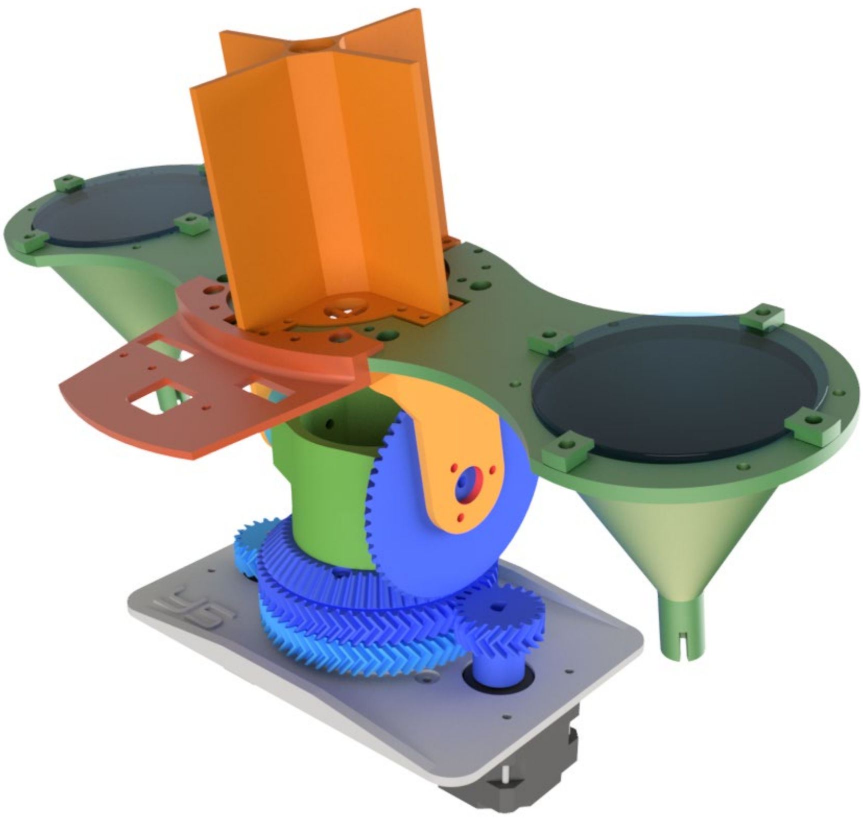

**Figure 6.5** Render of the design

**Figure 6.6** Manufactured version of our design top view

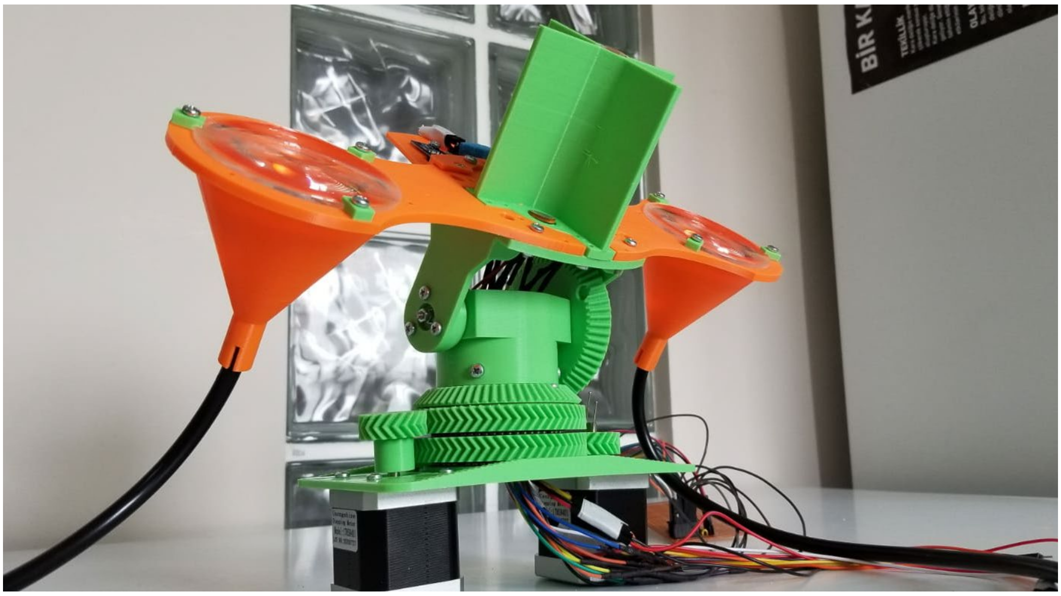

**Figure 6.7** Manufactured version of our design bottom view

If we examine the design and we can see that this mechanical design with the dual-axis sun tracker using step motors shows a great potential to produce this system without expensive equipment. Even though this system is very good for testing it is not suitable for the harsh conditions of the outside and the ABS material would be more suitable for the material in the long run. Also, the sensors should be under a glass or plastic box to protect them from the water. LDR Holder and sun tracking is working very well with this mechanism, and it easily finds the sun.

## 6.4. Data Transfer

If we examine the algorithm of data transfer the idea of using flags to update when it is only required should be working according to our research, but a sudden power lost can break this cycle of updating flags and even it is not updated it could make the update flag zero. This algorithm should be upgraded to be able to sustain power losses or data packet losses. Behaving according to the statements can be dangerous because their complexity.

# 7. CONCLUSION

Our searches showed to us that fiber optic lightning and decreasing the energy usage is possible with the use of right materials and right components.

According to the literature research, design, and simulations with the usage of the parts we have selected for the system is showing a potential of using fiber optic lighting as a main source lighting, especially in the offices.

Using the LDRs for the sun tracker with the algorithm we have developed is capable of tracking sun easily and efficiently.

The sensors for the measurements are correct choices of sensors and can be implanted with the monitoring system to make the system easy to use and easy to examine.

The mechanism can be further improved by changing the material to ABS and making it more resistant to cold and hot weather.

In the next version of our design the more lenses can be added, the size lenses can be bigger and multiple lenses can be collected to the one fiber optical cable to increase the illuminance because in this version of our testing unfortunately using only one lens for the one cable is not capable of illuminating the room.

# REFERENCES


[1] U.S Energy Information Administration , "Madison Gas and Electric Company's Managing Energy Costs in Office Buildings research report," 2018.

[2] Veitch och Galasiu, "The Physiological and Psychological Effects of Windows, Daylight, and View at Home: Review and Research Agenda.," NRC-IRC projekt 44-B3256 för Velux A/S, 2012.

[3] V. M. B. W. P. o. A. J. Mottram, "The impact of bright artificial white and blue-enriched light on sleep and circadian phase during the polar winter," Journal of Sleep research, 2010.

[4] C. C. D. D. H. J. Åkerstedt T., "Accidents and sleepiness: A consensus statement," in *International Conference on Work Hours, Sleep and Accidents*, Stockholm, Sweden, 1993.

[5] L. Heschong, "Daylighting in Schools An Investigation into the Relationship Between Daylighting and Human Performance Condensed Report.," 1999.

[6] L. &. W. R. &. O. S. Heschong, "Daylighting Impacts on Human Performance in School," Journal of the Illuminating Engineering Society, 2013.

[7] P. Boyce, "Reflections on relationships in behavioral lighting research," LEUKOS - Journal of Illuminating Engineering Society of North America, 2019.

[8] S. &. P. C. &. A. S. Batra, "Light Emitting Diode Lighting Flicker, its Impact on Health and the Need to Minimise it," Journal of clinical and diagnostic research, 2019.

[9] Boyce, Hunter och Howlett, "The Benefits of Daylight through Windows, literature review. Capturing the Daylight Dividend Program," U.S. Department of Energy, 2003.

[10] United Nations Department of Economic and Social Affairs, "Around 2.5 Billion More People Will Be Living In Cities By 2050," 2020. [Online]. Available:

https://www.un.org/development/desa/en/news/population/2018-world-urbanization-prospects.html. [Accessed 13 December 2020].

[11] L. &. J. Z. &. Z. Y. Chuen, "Creation of space in rock caverns in Singapore. Past, present and future.," Singapore, 2012.

[12] Velux, "Daylight Requirements In Building Codes - Daylight, Energy And Indoor Climate Book," 2020. [Online]. Available: https://www.velux.com/what-we-do/research-and-knowledge/deic-basic-book/daylight/daylight-requirements-in-building-codes. [Accessed 12 December 2020].

[13] Velux, "Velux Sun Tunnel Skylights," 2021. [Online]. Available: https://www.veluxusa.com/products/sun-tunnels. [Accessed 14 February 2021].

[14] V. &. S. S. Ngoc-Hai, "Optical Fiber Daylighting System Combined with LED Lighting and CPV based on Stepped Thickness Waveguide for Indoor Lighting," *Journal of the Optical Society of Korea,* 2016.

[15] A. j.-w. W. Irfan Ullah, "Development of Optical Fiber-Based Daylighting System and Its Comparison," energies , 2015.

[16] A. &. R. F. &. R. M. Ibrahim, "Dual Axes Solar Tracker," International Journal of Electrical and Computer Engineering, 2018.

[17] N.-H. &. P. T.-T. &. S. S. Vu, "Modified optical fiber daylighting system with sunlight transportation in free space," *Optics Express,* 2016.

[18] P. &. M. V. &. C. J. Trung, "A Study on IoT/LPWA-based Low Power Solar Panel Monitoring System for Smart City," 2019.

[19] Global Solar Atlas, "globalsolaratlas.info," 2020. [Online]. Available: https://globalsolaratlas.info/global-pv-potential-study. [Accessed 13 December 2020].

[20] E. Özgür, «Solar Power in Turkey,» TTMOB , 2020.

[21] V. Aggarwal, "Calculate Your Solar Panel Payback Period | Energysage," Solar News, 2020. [Online]. Available: https://news.energysage.com/understanding-your-solar-panel-payback-period/. [Accessed 13 December 2020].

[22] 3DPrinterGeeks, "How Long Will a PLA 3D Printed Object Last?," 21 October 2019. [Online]. Available: https://3dprintergeeks.com/pla-3d-printed-object-durability/. [Accessed 14 October 2021].

[23] NetStop, "Explaning WiFi Standards," 2020. [Online]. Available: https://www.netspotapp.com/explaining-wifi-standards.html. [Accessed 14 February 2021].

[24] IETF, "Darpa Internet Protocol Specification," September 1981. [Online]. Available: https://tools.ietf.org/html/rfc793. [Accessed 14 February 2021].

[25] MDN Web Docs, "An overview of HTTP," 2020. [Online]. Available: https://developer.mozilla.org/en-US/docs/Web/HTTP/Overview. [Accessed 14 February 2021].

[26] IETF, "The JavaScript Object Notation (JSON) Data Interchange Format," March 2014. [Online]. Available: https://tools.ietf.org/html/rfc7159. [Accessed 14 February 2021].

[27] Microsoft, "Framework Design Guidelines," 2008. [Online]. Available: https://docs.microsoft.com/tr-tr/dotnet/standard/design-guidelines/. [Accessed 14 February 2021].

[28] ISO/IEC/IEEE, "Systems and software engineering — Vocabulary," 2017. [Online]. Available: https://www.iso.org/standard/71952.html. [Accessed 14 February 2021].

[29] ISO/TSC 172/SC 7, "Ophthalmic optics — Spectacle lenses — Vocabulary," 2019. [Online]. Available: iso.org/standard/68450.html. [Accessed 14 February 2021].

[30] ASTM, "Fastener Standards," 2021. [Online]. Available: https://www.astm.org/Standards/fastener-standards.html. [Accessed 14 February 2021].

[31] Wikipedia, "Sunlight," 2020. [Online]. Available: https://en.wikipedia.org/wiki/Sunlight. [Accessed 12 December 2020].

[32] GrabCad, "Pan Tilt Mechanism," [Online]. Available: https://grabcad.com/library/differential-pan-tilt-1. [Accessed 12 December 2020].

[33] P. &. H. C. &. H. O. Boyce, "The Benefits of Daylight through Windows," California Energy Commission, California, 2003.

[34] G. &. D. R. Prinsloo, "Solar Tracking, Sun Tracking, Sun Tracker, Solar Tracker, Follow Sun, Sun Position," 2015.

# APPENDICES

## Appendix A – Lower Level Software

### Arduino Code for Sun Tracking Algorithm

```
class MotorPositionCalculation {
  private:
    int ldr_values[5];
    int refLDR = 0;
    int UL = 0;
    int UR = 0;
    int DL = 0;
    int DR = 0;

#define MY_dirPin 12
#define MY_stepPin 13
#define MX_dirPin 27
#define MX_stepPin 14
#define stepsPerRevolution 200*16
#define thresholdError 0.12

  public:
    void MotorPositionCalculationSetup() {
      pinMode(MX_stepPin, OUTPUT);
      pinMode(MX_dirPin, OUTPUT);
      pinMode(MY_stepPin, OUTPUT);
      pinMode(MY_dirPin, OUTPUT);
```

```
    }
    int findMotorPosition(int *dest) {

      refLDR = dest[0];
      UL = dest[1];
      UR = dest[2];
      DL = dest[3];
      DR = dest[4];
      refLDR = (refLDR+UL+UR+DL+DR)/5;
      float thresholdLDR = thresholdError*refLDR;

      float left = (UL + DL) / 2;
      float rigth = (UR + DR) / 2;
      float up = (UL + UR) / 2;
      float down = (DL + DR) / 2;

      int LeftRightABS = abs(left-rigth);
      int UpDownABS = abs(up-down);


      Serial.print("Reference LDR -> ");
      Serial.println(refLDR);
      Serial.print("Left -> ");
      Serial.println(left);
      Serial.print("Right -> ");
      Serial.println(rigth);
      Serial.print("Up -> ");
      Serial.println(up);
      Serial.print("Down -> ");
      Serial.println(down);


      if (left > rigth && LeftRightABS >= thresholdLDR) {
        Serial.println("Motor X ClockWise");

        digitalWrite(MX_dirPin, HIGH); digitalWrite(MY_dirPin,
HIGH);
        // Spin the stepper motor 1 revolution slowly:
        for (int i = 0; i < stepsPerRevolution / 1024; i++) {
          // These four lines result in 1 step:
          digitalWrite(MX_stepPin, HIGH);
digitalWrite(MY_stepPin, HIGH);
          delayMicroseconds(3000);
          digitalWrite(MX_stepPin, LOW);
digitalWrite(MY_stepPin, LOW);
          delayMicroseconds(3000);
        }

      }
```

```
      else if (left <= rigth && LeftRightABS >= thresholdLDR)
{
        Serial.println("Motor X Counter ClockWise");

        digitalWrite(MX_dirPin, LOW); digitalWrite(MY_dirPin,
LOW);
        // Spin the stepper motor 1 revolution slowly:
        for (int i = 0; i < stepsPerRevolution / 1024; i++) {
          // These four lines result in 1 step:
          digitalWrite(MX_stepPin, HIGH);
digitalWrite(MY_stepPin, HIGH);
          delayMicroseconds(3000);
          digitalWrite(MX_stepPin, LOW);
digitalWrite(MY_stepPin, LOW);
          delayMicroseconds(3000);
        }


      }
      else if (up > down && UpDownABS >= thresholdLDR ) {
        Serial.println("Motor Y ClockWise");

        digitalWrite(MY_dirPin, HIGH);
        // Spin the stepper motor 1 revolution slowly:
        for (int i = 0; i < stepsPerRevolution / 1024; i++) {
          // These four lines result in 1 step:
          digitalWrite(MY_stepPin, HIGH);
          delayMicroseconds(3000);
          digitalWrite(MY_stepPin, LOW);
          delayMicroseconds(3000);
        }

      }
      else if (up <= down && UpDownABS >= thresholdLDR) {
        Serial.println("Motor Y Counter ClockWise");

        digitalWrite(MY_dirPin, LOW);
        // Spin the stepper motor 1 revolution slowly:
        for (int i = 0; i < stepsPerRevolution / 1024; i++) {
          // These four lines result in 1 step:
          digitalWrite(MY_stepPin, HIGH);
          delayMicroseconds(3000);
          digitalWrite(MY_stepPin, LOW);
          delayMicroseconds(3000);
        } }
        else {
          Serial.println("Stop the Motor!");
          return 1; //Exit from the algorithm.
        }
```

```
        if(UpDownABS <= thresholdLDR && LeftRightABS <=
thresholdLDR)  {
        Serial.println("Stop the Motor!");
        Serial.println("Stop the Motor!");
        return 1;
       }

        return 0;
      }


    };
    MotorPositionCalculation MotorPositionCalculation;
```

### Arduino C Code for Lux Sensor

```
class LuxSensor {
  private:
    SFE_TSL2561 light;
    boolean gain; // Gain setting, 0 = X1, 1 = X16;
    unsigned int ms;

  public:
    void LuxSensorSetup() {
      light.begin();
      unsigned char ID;
      if (light.getID(ID))
      {
        Serial.print("Got factory ID: 0X");
        Serial.print(ID, HEX);
        Serial.println(", should be 0X5X");
      }
      // Most library commands will return true if
communications was successful,
      // and false if there was a problem. You can ignore this
returned value,
      // or check whether a command worked correctly and
retrieve an error code:
      else
      {
        byte error = light.getError();
        printError(error);
      }
      gain = 0;

      // If time = 0, integration will be 13.7ms
      // If time = 1, integration will be 101ms
      // If time = 2, integration will be 402ms
      // If time = 3, use manual start / stop to perform your
own integration
```

```
      unsigned char time = 2;

      // setTiming() will set the third parameter (ms) to the
      // requested integration time in ms (this will be useful
later):

      Serial.println("Set timing...");
      light.setTiming(gain, time, ms);

      // To start taking measurements, power up the sensor:

      Serial.println("Powerup...");
      light.setPowerUp();




    }
    double LuxSensorLoop() {
      delay(ms);
      unsigned int data0, data1;
      double lux;
      if (light.getData(data0, data1))
      {
        // getData() returned true, communication was
successful

        Serial.print("data0: ");
        Serial.print(data0);
        Serial.print(" data1: ");
        Serial.print(data1);

        // To calculate lux, pass all your settings and
readings
        // to the getLux() function.

         // Resulting lux value
        boolean good; // True if neither sensor is saturated

        // Perform lux calculation:

        good = light.getLux(gain, ms, data0, data1, lux);

        // Print out the results:

        Serial.print(" lux: ");
        Serial.print(lux);
        if (good) Serial.println(" (good)"); else
Serial.println(" (BAD)");
      }
```

```
      else
      {
        // getData() returned false because of an I2C error,
inform the user.

        byte error = light.getError();
        printError(error);
      }
      return lux;
    }

    void printError(byte error)
    // If there's an I2C error, this function will
    // print out an explanation.
    {
      Serial.print("I2C error: ");
      Serial.print(error, DEC);
      Serial.print(", ");

      switch (error)
      {
        case 0:
          Serial.println("success");
          break;
        case 1:
          Serial.println("data too long for transmit buffer");
          break;
        case 2:
          Serial.println("received NACK on address
(disconnected?)");
          break;
        case 3:
          Serial.println("received NACK on data");
          break;
        case 4:
          Serial.println("other error");
          break;
        default:
          Serial.println("unknown error");
      }
    }
};
```

### Arduino C Code for LDR Sensors

```
void readLDRData(int *dest)
{
    int potValue = 0;
    int ldrValue1 = 0;
```

```
    int ldrValue2 = 0;
    int ldrValue3 = 0;
    int ldrValue4 = 0;

    potValue = map(analogRead(referenceLdr),0,4095,0,100);
    ldrValue1 = map(analogRead(ldrPin1),0,4095,0,100);
    ldrValue2 = map(analogRead(ldrPin2),0,4095,0,100);
    ldrValue3 = map(analogRead(ldrPin3),0,4095,0,100);
    WRITE_PERI_REG(SENS_SAR_READ_CTRL2_REG, reg_b);
    SET_PERI_REG_MASK(SENS_SAR_READ_CTRL2_REG,
SENS_SAR2_DATA_INV);
    ldrValue4 = map(analogRead(ldrPin4),0,4095,0,100);

    dest[0] = potValue;
    dest[1] = ldrValue1;
    dest[2] = ldrValue2;
    dest[3] = ldrValue3;
    dest[4] = ldrValue4;
    //return dest;
}
```

Arduino C Code for POST Request Function

```
String httpPostRequest(const String RequestData) {
  HTTPClient http;
  // Your IP address with path or Domain name with URL path
  http.begin(serverName);
  // Send HTTP POST request
  http.addHeader("Content-Type", "application/json");
  Serial.println("PostunDatası ->");
  Serial.println(RequestData);
  int httpResponseCode = http.POST(RequestData);
  String payload = "{}";

  if (httpResponseCode>0) {
    Serial.print("HTTP Response code: ");
    Serial.println(httpResponseCode);
    payload = http.getString();
  }
  else {
    Serial.print("Error code: ");
    Serial.println(httpResponseCode);
  }
  // Free resources
  http.end();
  return payload;
}
```

### Arduino C Code for GET Request

```
String httpGETRequest(const char* serverName) {
  HTTPClient http;

  // Your IP address with path or Domain name with URL path
  http.begin(serverName);

  // Send HTTP POST request
  int httpResponseCode = http.GET();

  String payload = "{}";

  if (httpResponseCode>0) {
    Serial.print("HTTP Response code: ");
    Serial.println(httpResponseCode);
    payload = http.getString();
  }
  else {
    Serial.print("Error code: ");
    Serial.println(httpResponseCode);
  }
  // Free resources
  http.end();

  return payload;
}
```

### Arduino C Code for the Air Pressure and Temperature Sensor

```
#include <Wire.h>
#include <MS5x.h>
MS5x barometer(&Wire);


class PressureSensor {
  private:
    bool barometerConnected = false;

    uint32_t prevConnectionAttempt = 0;
    uint32_t connectionAttemptDelay = 500; // Time in ms to
wait between connection attempts to the sensor
    uint32_t prevTime = 0;; // The time, in MS the device was
last polled

    double prevPressure = 0; // The value of the pressure the
last time the sensor was polled
    double prevTemperature = 0; // The value of the
temperature the last time the sensor was polled
```

```
    double seaLevelPressure = 0;

  public:
    void PressureSensorSetup() {
      barometer.setI2Caddr(I2C_HIGH);
      barometer.setSamples(MS5xxx_CMD_ADC_2048);
      barometer.setDelay(1000);
      barometer.setPressPa();
      barometer.setTOffset(-200); // Decreases temperature
reading by 2.00°C
      barometer.setPOffset(5);
      if (barometer.connect() > 0) { // barometer.connect
starts wire and attempts to connect to sensor
        Serial.println(F("Error connecting..."));
      } else {
        Serial.println(F("Connected to Sensor"));
        barometerConnected = true;
      }
    }
    void PressureSensorLoop() {
      Serial.print(F("\nIs Connected = "));
      Serial.print(barometerConnected);
      double pressure = 0;
      double temperature = 0;
      double altitude = 0;

      if (!barometerConnected) {
        if (millis() - prevConnectionAttempt >=
connectionAttemptDelay) {
          // Retry connection attemp
          if (barometer.connect() > 0) {
            Serial.println(F("Error connecting..."));
            prevConnectionAttempt = millis();
          } else {
            Serial.println(F("Connected!"));
            barometerConnected = true;
          }
        }
      } else {
        barometer.checkUpdates();
        if (barometer.isReady()
          temperature = barometer.GetTemp();
          pressure = barometer.GetPres();
          if ((temperature != prevTemperature) || (pressure !=
prevPressure)) {
            if (seaLevelPressure == 0) seaLevelPressure =
barometer.getSeaLevel(217.3);

            Serial.print(F("The current pressure is: "));
            Serial.print(pressure);
            Serial.println(F(" Pascals"));
```

```
            Serial.print(F("The current temperature is: "));
            Serial.print(temperature);
            Serial.println(F("°C"));

            Serial.print(F("The calculated pressure at
seaLevel is: "));
            Serial.print(seaLevelPressure);
            Serial.println(F(" Pascals"));


            altitude = barometer.getAltitude();
            Serial.print(F("The calculated altitude is: "));
            Serial.print(altitude);
            Serial.println(F(" meters"));

            altitude = barometer.getAltitude(true);
            Serial.print(F("The calculated altitude with
temperature correction is: "));
            Serial.print(altitude);
            Serial.println(F(" meters"));

            Serial.println();
            Serial.println();

            prevTemperature = temperature;
            prevPressure = pressure;

          }
        }
      }
    }
};

PressureSensor PressureSensor;
```

## Appendix B – Higher Level Software

### JavaScript code for the Chart

```
function mainChart() {
    var dataPointsLDR1 = [];
    var dataPointsLDR2 = [];
    var dataPointsLDR3 = [];
    var dataPointsLDR4 = [];
    var dataPointsLDR5 = [];
    var dataPointsTemperature = [];
    var chart;
    var TemperatureChart;
    $.getJSON("https://localhost:44335/api/students", function (data) {
        $.each(data, function (key, value) {
```

```
        dataPointsLDR1.push({ x: value.id, y: value.ldR1 });
        dataPointsLDR2.push({ x: value.id, y: value.ldR2 });
        dataPointsLDR3.push({ x: value.id, y: value.ldR3 });
        dataPointsLDR4.push({ x: value.id, y: value.ldR4 });
        dataPointsLDR5.push({ x: value.id, y: value.ldR5 });
        dataPointsTemperature.push({ x: value.id, y: value.temperature });
    });
    chart = new CanvasJS.Chart("LDRChartContainer", {
        animationEnabled: true,
        zoomEnabled: true,
        theme: "light2",
        title: {
            text: "LDR1-LDR2-LDR3-LDR4-LDR5 Table"
        },
        axisX: {
            //valueFormatString: "DD MMM",
            title: "Data Point",
            crosshair: {
                enabled: true,
                snapToDataPoint: false
            }
        },
        axisY: {
            title: "LDR Value",
            includeZero: true,
            crosshair: {
                enabled: true
            }
        },
        toolTip: {
            shared: true
        },
        legend: {
            cursor: "pointer",
            itemclick: toogleDataSeries
        },
        data: [{
            type: "spline",
            showInLegend: true,
            name: "LDR1",
            //markerType: "square",
            lineDashType: "solid",
            color: "#12253f",
            dataPoints: dataPointsLDR1,
        },
        {
            type: "spline",
            showInLegend: true,
            name: "LDR2",
            lineDashType: "shortDash",
            color: "#6666ff",
            dataPoints: dataPointsLDR2,
        },
        {
            type: "spline",
            showInLegend: true,
            name: "LDR3",
            lineDashType: "dash",
            color: "#ffd700",
            dataPoints: dataPointsLDR3,
        },
        {
```

```
        type: "spline",
        showInLegend: true,
        name: "LDR4",
        lineDashType: "shortDashDot",
        color: "#40e0d0",
        dataPoints: dataPointsLDR4,
    },
    {
        type: "spline",
        showInLegend: true,
        name: "LDR5",
        lineDashType: "shortDashDotDot",
        color: "#40ff80",
        dataPoints: dataPointsLDR5,
    },



    ]
});


TemperatureChart = new CanvasJS.Chart("TempChartContainer", {
    animationEnabled: true,
    zoomEnabled: true,
    theme: "light2",
    title: {
        text: "Temperature Table"
    },
    axisX: {
        //valueFormatString: "DD MMM",
        title: "Data Point",
        crosshair: {
            enabled: true,
            snapToDataPoint: false
        }
    },
    axisY: {
        title: "Temp °C",
        suffix: " °C",
        includeZero: true,
        crosshair: {
            enabled: true
        }
    },
    toolTip: {
        shared: true
    },
    legend: {
        cursor: "pointer",
        itemclick: toogleDataSeries
    },
    data: [{
        type: "spline",
        showInLegend: true,
        yValueFormatString: "#0.## °C",
        name: "°C",
        //markerType: "square",
        lineDashType: "solid",
        color: "#DE3163",
        dataPoints: dataPointsTemperature,
    },
```

```
            ]
        });

        chart.render();
        TemperatureChart.render();
        updateChart();
    });

    function toogleDataSeries(e) {
        if (typeof (e.dataSeries.visible) === "undefined" || e.dataSeries.visible) {
            e.dataSeries.visible = false;
        } else {
            e.dataSeries.visible = true;
        }
        chart.render();
        TemperatureChart.render();
    }

    function updateChart() {
        $.getJSON("https://localhost:44335/api/students" + "/" +
(dataPointsLDR1.length), function (value) {

            dataPointsLDR1.push({
                x: value.id, y: value.ldR1
            });
            dataPointsLDR2.push({
                x: value.id, y: value.ldR2
            });
            dataPointsLDR3.push({
                x: value.id, y: value.ldR3
            });
            dataPointsLDR4.push({
                x: value.id, y: value.ldR4
            });
            dataPointsLDR5.push({
                x: value.id, y: value.ldR5
            });
            dataPointsTemperature.push({
                x: value.id, y: value.temperature
            });
            chart.render();
            TemperatureChart.render();


        });
    }
    setInterval(function () {
        updateChart();
    }, 1000);
}
```

### JavaScript code for the Table

```
console.log("TableJavaScript");
function mainTable() {
    console.log("In getAllMessages();");
    var tbl = $('#messagesTable');
    var i = 1;
    console.log("In windowonload");
```

```
    $.ajax({
        url: '/api/students',
        contentType: 'application/html ; charset:utf-8',
        type: 'GET',
        dataType: 'json',
        success: function (result) {
            console.log(result);
            tbl.empty();
            $.each(result, function (key, value) {
                tbl.append(
                    '<tr>' +
                    '<td>' + i + '</td>' +
                    '<td>' + value.createDate + '</td>' +
                    '<td>' + value.firstMidName + '</td>' +
                    '<td>' + value.ldR1 + '</td>' +
                    '<td>' + value.ldR2 + '</td>' +
                    '<td>' + value.ldR3 + '</td>' +
                    '<td>' + value.ldR4 + '</td>' +
                    '<td>' + value.ldR5 + '</td>' +
                    '<td>' + value.temperatureInCelc + '</td>'
                    + '</tr>'
                );
                i = i + 1;
            }); updateTable();
        }
    });

    function updateTable() {
        console.log("uptadeTable");
        $.getJSON("https://localhost:44335/api/students" + "/" + (i))
            .done(function (value) {
                console.log("JSON Data: " + value);
                tbl.append(
                    '<tr>' +
                    '<td>' + i + '</td>' +
                    '<td>' + value.createDate + '</td>' +
                    '<td>' + value.firstMidName + '</td>' +
                    '<td>' + value.ldR1 + '</td>' +
                    '<td>' + value.ldR2 + '</td>' +
                    '<td>' + value.ldR3 + '</td>' +
                    '<td>' + value.ldR4 + '</td>' +
                    '<td>' + value.ldR5 + '</td>' +
                    '<td>' + value.temperatureInCelc + '</td>'
                    + '</tr>'
                );
                i = i + 1;
            })
            .fail(function (jqxhr, textStatus, error) {
                var err = textStatus + ", " + error;
                console.log("Request Failed: " + err);
            });
    }
    setInterval(function () {
        updateTable();
    }, 1000);
}
```