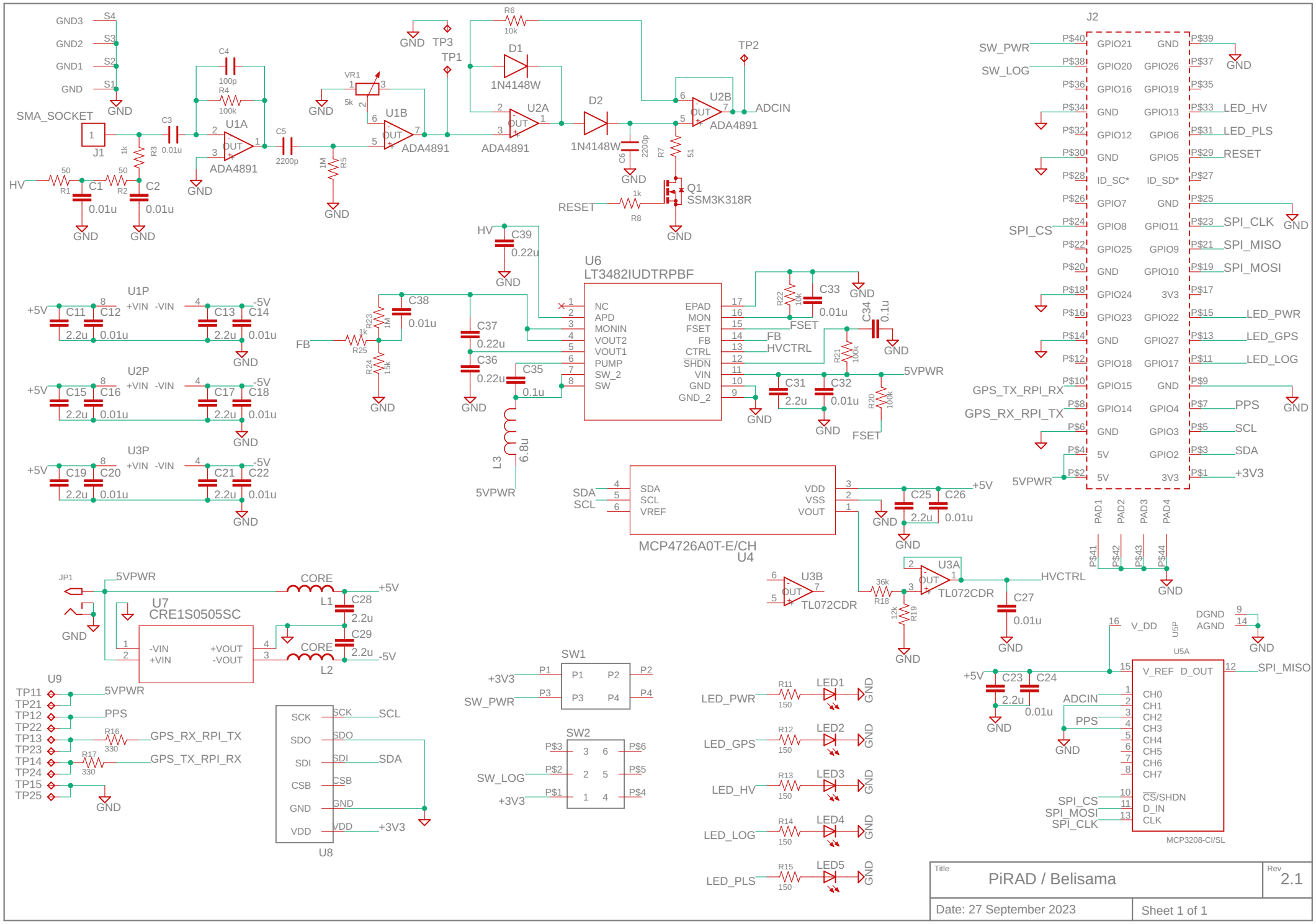

Title	Rev
PiRAD / Belisama	2.1
Date: 27 September 2023	Sheet 1 of 1