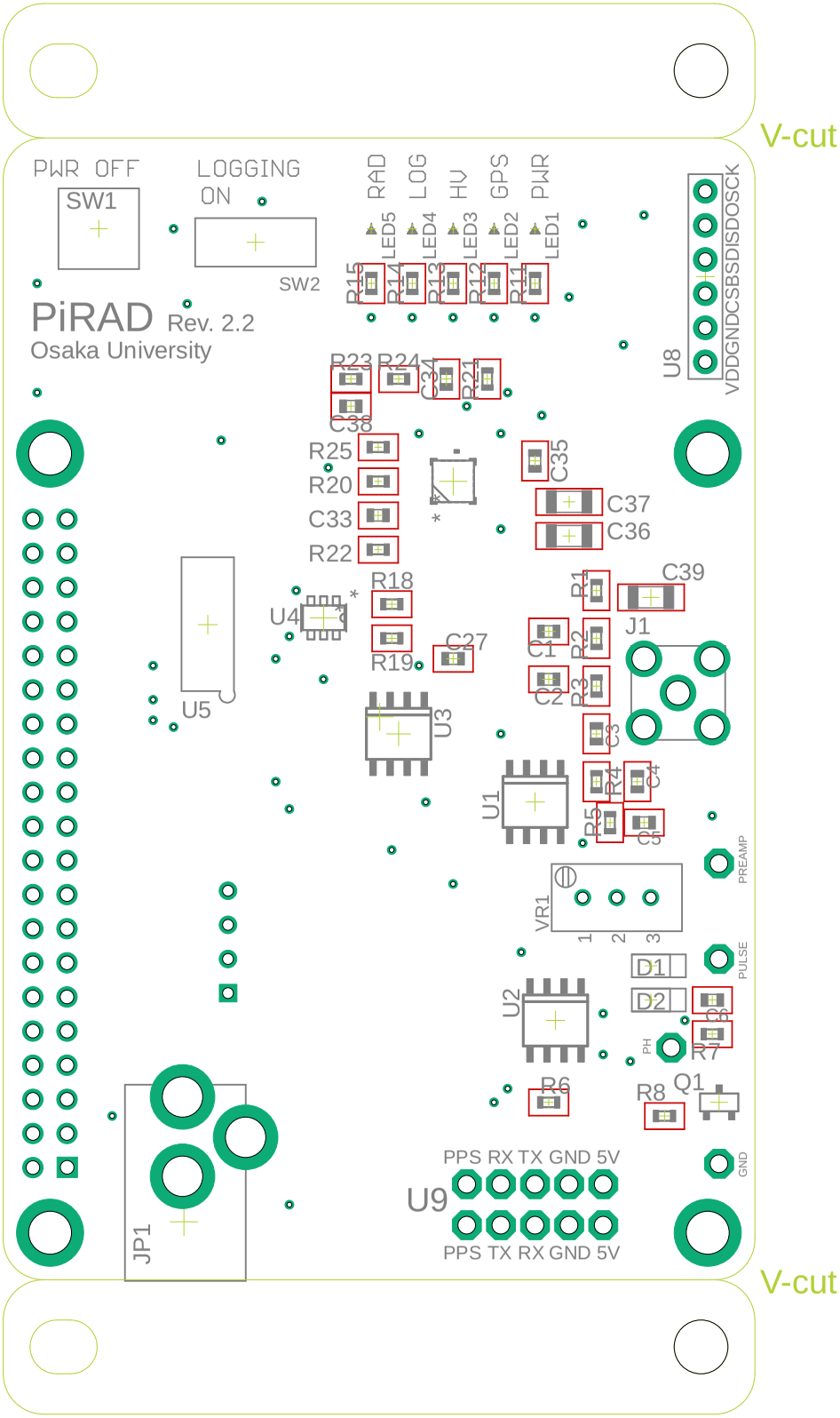
V-cut
PWR OFF
SW1
LOGGING
ON
SW2
RAD
LOG
HV
GPS
PWR
LED5
LED4
LED3
LED2
LED1
R15
R14
R13
R12
R11
PiRAD Rev. 2.2
Osaka University
U8
VDDGNDCSBSDISDOSCK
R23
R24
C34
R21
C38
R25
R20
C33
R22
C35
C37
C36
C39
R18
U4
R19
C27
R1
C1
R2
C2
R3
C3
J1
U5
U3
U1
R4
C4
R5
C5
PREAMP
VR1
1
2
3
PULSE
D1
D2
U2
C6
PH
R7
R6
R8
Q1
GND
PPS RX TX GND 5V
U9
PPS TX RX GND 5V
JP1
V-cut