Characterizing the Bethe Partition Function of Double-Edge Factor Graphs via Graph Covers

Yuwen Huang and Pascal O. Vontobel

Department of Information Enginerring
The Chinese University of Hong Kong
hy018@ie.cuhk.edu.hk, pascal.vontobel@ieee.org

November 8, 2022

Outline

- Introduction and Overview of Main Results
- Classical Case
  - Background
  - Main Results
- Quantum Case
  - Motivation
  - Background
  - Main Results
- Conclusion

Introduction and Main Results

Introduction and Main Results

In the classical case, we consider a standard normal factor graph (S-NFG).

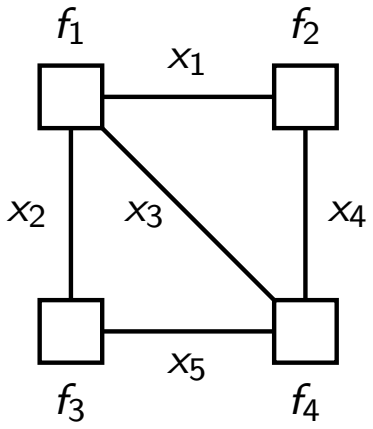

Assumption

Every local function f satisfies

$$f(\boldsymbol{x}_{\partial f}) \in \mathbb{R}_{\geq 0}, \ \forall \boldsymbol{x}_{\partial f}.$$

Definition

The partition function is defined to be

$$Z(\mathrm{N}) := \sum_{\boldsymbol{x}} \prod_{f} f(\boldsymbol{x}_{\partial f}).$$

Note

- $Z(\mathrm{N}) \in \mathbb{R}_{\geq 0}$ for all S-NFG N.
- A well-known approximation of $Z(\mathrm{N})$ is $Z_{\mathrm{B}}(\mathrm{N})$.
- [Chertkov and Chernyak, 2006] Loop series expansion for $Z(\mathrm{N})$:

$$Z(\mathrm{N}) = Z_{\mathrm{B}}(\mathrm{N}) \cdot \left(1 + \sum_{\mathcal{E} \subset \mathcal{E}_{\mathrm{full}}} \mathcal{Z}(\mathcal{E})\right).$$

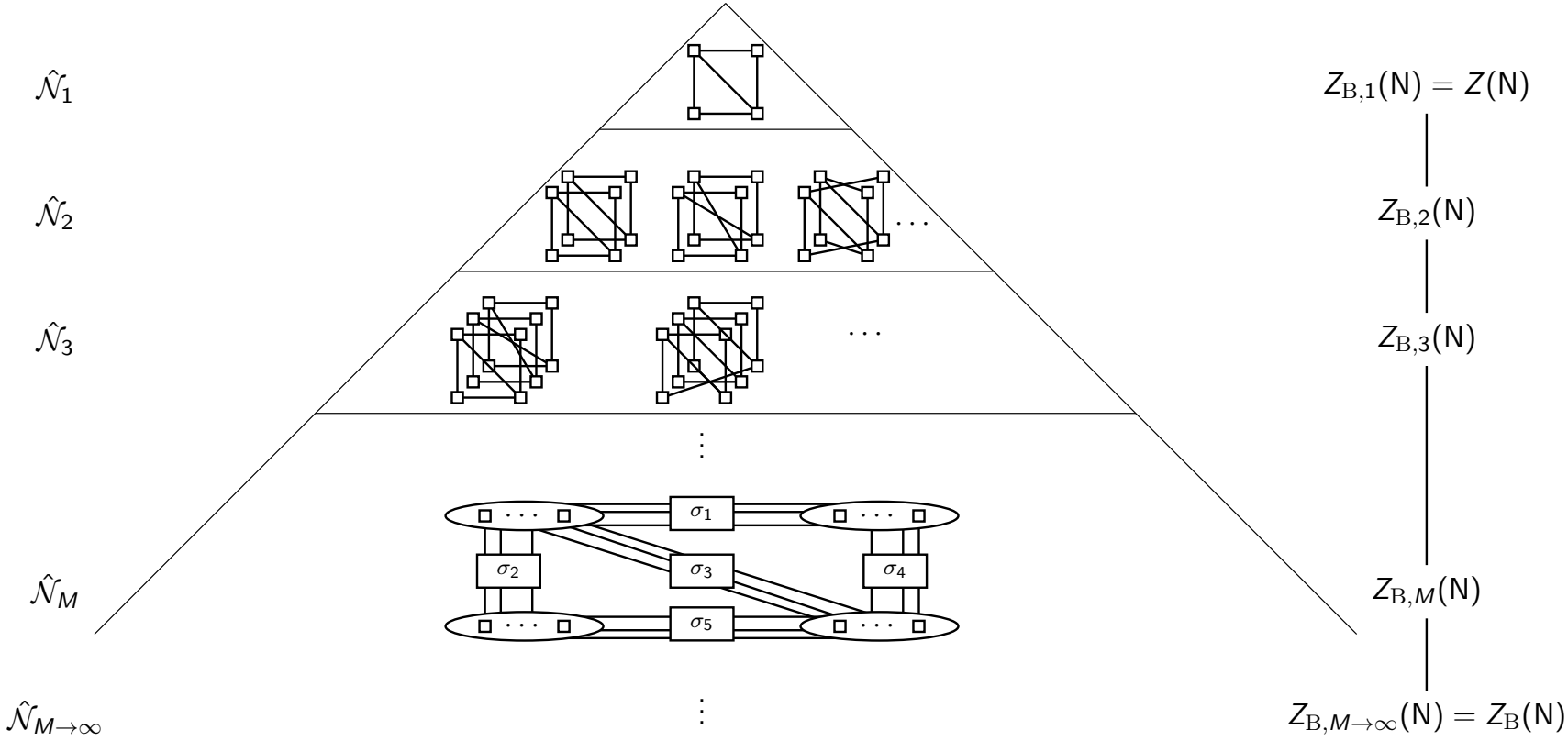

The degree-M Bethe partition function $Z_{\mathrm{B},M}(\mathrm{N})$ is defined to be

$$Z_{\mathrm{B},M}(\mathrm{N}) := \left(\left\langle Z(\hat{\mathrm{N}}) \right\rangle_{\hat{\mathrm{N}} \in \hat{\mathcal{N}}_M} \right)^{1/M}.$$

Theorem

[Vontobel, 2013] For any S-NFG N,

$$\limsup_{M\to\infty} Z_{\mathrm{B},M}(\mathrm{N}) = Z_{\mathrm{B}}(\mathrm{N}).$$

Introduction and Main Results

In the quantum case, we consider a double-edge normal factor graph (DE-NFG).

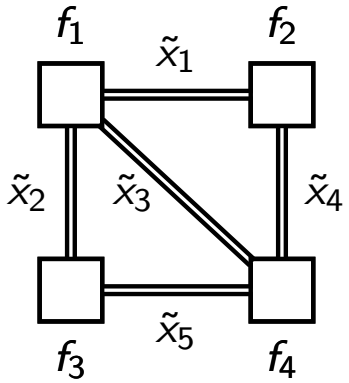

Assumption

For every local function f, the associated matrix is complex-valued, Hermitian, positive semi-definite (PSD).

Definition

The partition function is defined to be

$$Z(\mathrm{N}) := \sum_{\tilde{\boldsymbol{x}}} \prod_{f} f(\tilde{\boldsymbol{x}}_{\partial f}).$$

Note

- $Z(\mathrm{N}) \in \mathbb{R}_{\geq 0}$ for all DE-NFG N.
- A numerical sign problem for evaluating $Z(\mathrm{N})$.

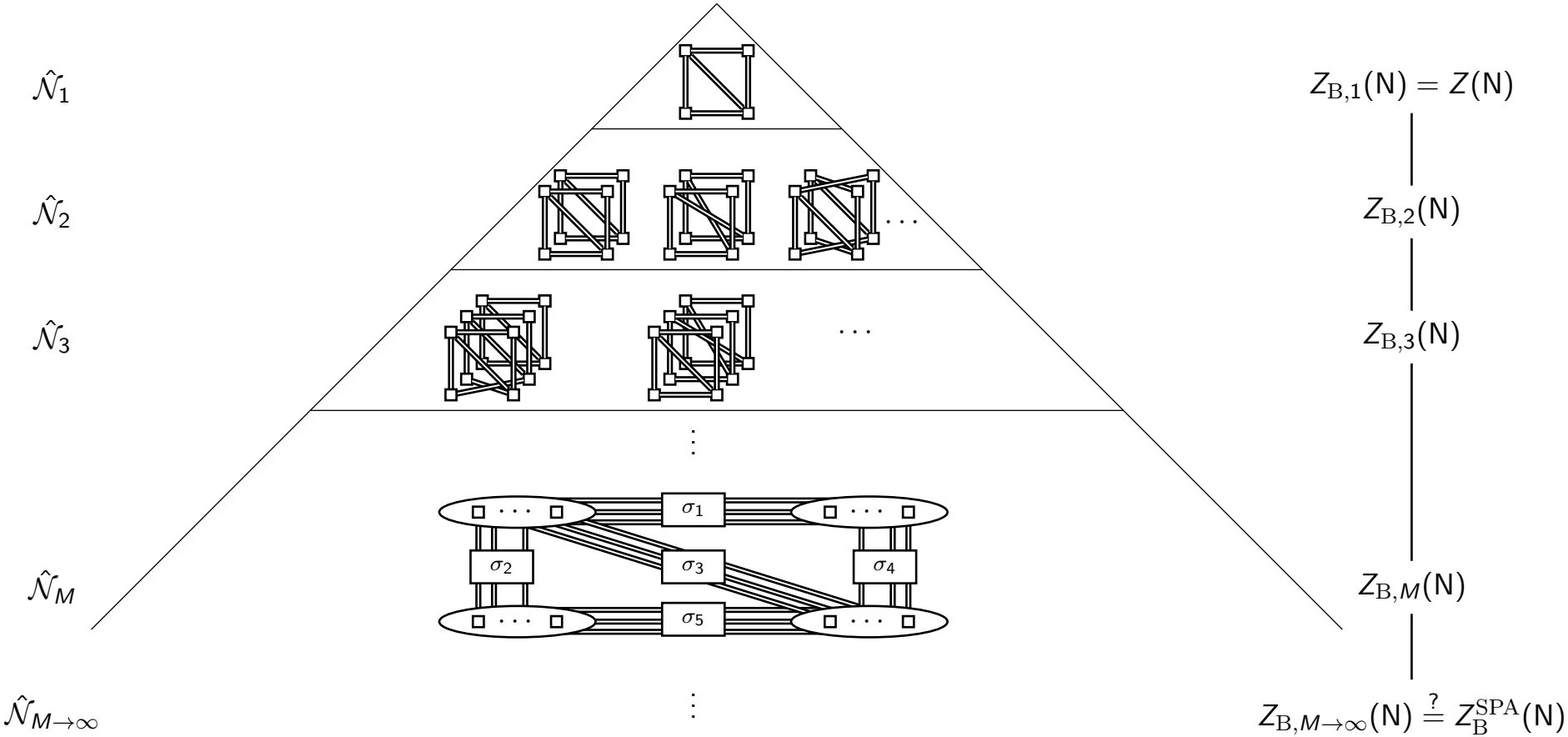

Conjecture

For some suitable class of DE-NFGs,

$$\limsup_{M\to\infty} Z_{\mathrm{B},M}(\mathsf{N}) = Z_{\mathrm{B}}^{\mathrm{SPA}}(\mathsf{N}).$$

Introduction and Main Results

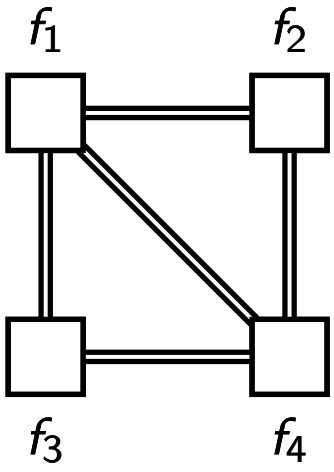

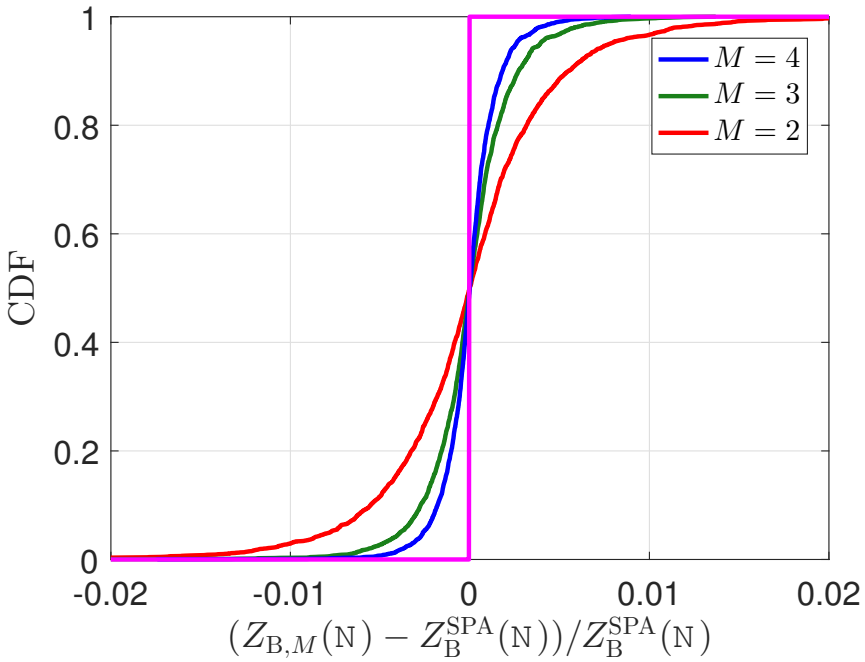

Difficulties

Proof technique for proving the theorem in the classical case does not work for proving the conjecture in the quantum case.

Note

So far, we can prove the conjecture for some DE-NFGs.

Classical Case

Standard Normal Factor Graphs (S-NFGs)

Example of S-NFGs

An S-NFG can be used for representing a factorization of a multivariate function.

Given a global function

$$g(x_1, \ldots, x_5) := f_1(x_1, x_2, x_3) \cdot f_2(x_1, x_4) \cdot f_3(x_2, x_5) \cdot f_4(x_3, x_4, x_5),$$

the associated S-NFG is given as follows.

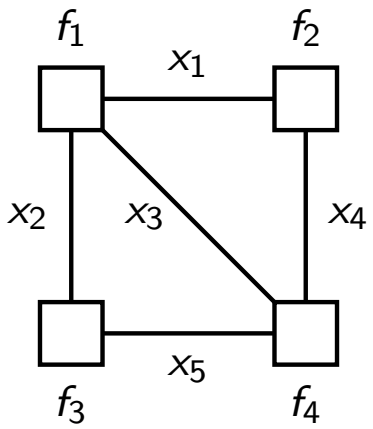

Definition of S-NFGs

An S-NFG $\mathrm{N}(\mathcal{F}, \mathcal{E}_{\mathrm{full}}, \mathcal{X})$ is a graph $(\mathcal{F}, \mathcal{E}_{\mathrm{full}})$ equipped with

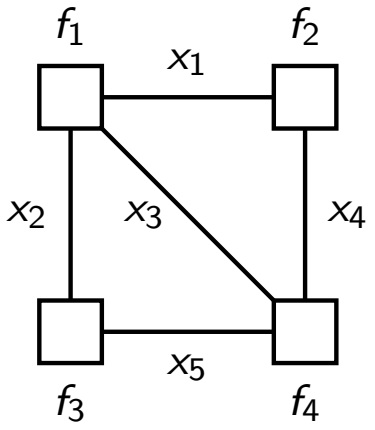

1. a vertex set $\mathcal{F}$ and an edge set $\mathcal{E}_{\mathrm{full}}$;
2. a set of local functions $\mathcal{F}$;
3. for every $f \in \mathcal{F}$, the boundary set ∂f;
4. for every $e \in \mathcal{E}_{\mathrm{full}}$, alphabet $\mathcal{X}_e$ for variable x_e associated with edge e;
5. for every $f \in \mathcal{F}$,
$$\mathcal{X}_f := \prod_{e \in \partial f} \mathcal{X}_e;$$
6. for every $f \in \mathcal{F}$,
$$\begin{aligned} f : \mathcal{X}_f &\to \mathbb{R}_{\geq 0} \\ \boldsymbol{x}_{\partial f} &\mapsto f(\boldsymbol{x}_{\partial f}). \end{aligned}$$

Details of S-NFGs

Given an S-NFG N, we define:

1. the alphabet $\mathcal{X}$ to be the set

$$\mathcal{X} := \prod_{e \in \mathcal{E}_{\text{full}}} \mathcal{X}_e;$$

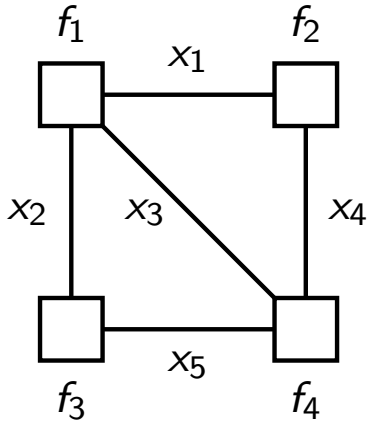

2. the global function g to be the mapping

$$\begin{aligned} g : \mathcal{X} &\to \mathbb{R}_{\geq 0} \\ \boldsymbol{x} &\mapsto \prod_{f \in \mathcal{F}} f(\boldsymbol{x}_{\partial f}); \end{aligned}$$

3. the partition function $Z(\mathsf{N})$ to be

$$Z(\mathsf{N}) := \sum_{\boldsymbol{x} \in \mathcal{X}} g(\boldsymbol{x}) = \sum_{\boldsymbol{x}} \prod_{f} f(\boldsymbol{x}_{\partial f}).$$

Sum-Product Algorithm (SPA)

SPA

Let $e = (f, f') \in \mathcal{E}_{\text{full}}$. The message $\boldsymbol{\mu}_{e \to f'} \in \mathbb{R}^{|\mathcal{X}_e|}$ is updated based on the following rule:

$$\mu_{e \to f'}(z_e) \propto \sum_{\boldsymbol{x}_{\partial f} : x_e = z_e} f(\boldsymbol{x}_{\partial f}) \cdot \prod_{e' \in \partial f \setminus \{e\}} \mu_{e' \to f}(x_{e'}).$$

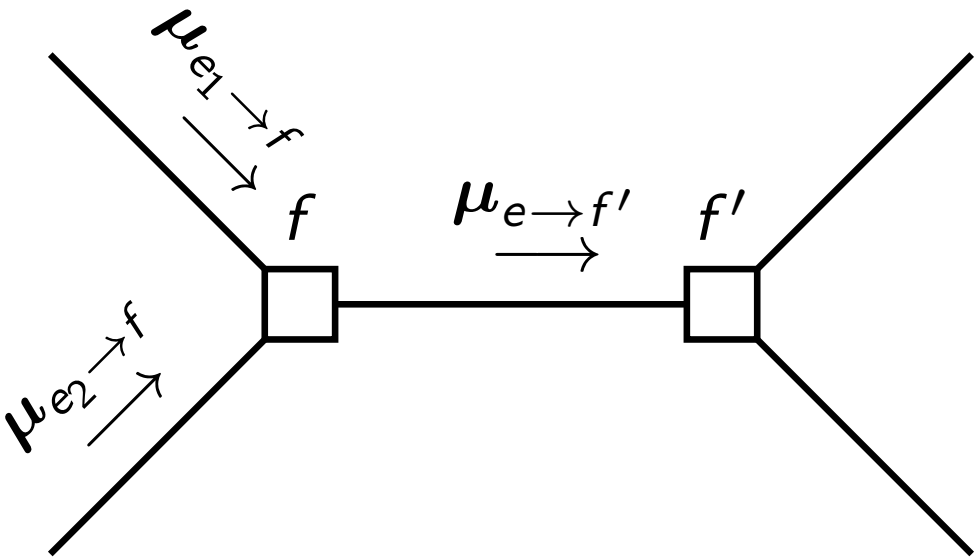

SPA

Definition

Given message $\boldsymbol{\mu}$, we define

$$Z_f(\mathsf{N}, \boldsymbol{\mu}) := \sum_{\mathbf{x}_{\partial f}} f(\mathbf{x}_{\partial f}) \prod_{e \in \partial f} \mu_{e \to f}(x_e), \qquad f \in \mathcal{F},$$

$$Z_e(\mathsf{N}, \boldsymbol{\mu}) := \sum_{x_e} \mu_{e \to f}(x_e) \mu_{e \to f'}(x_e), \qquad e = (f, f') \in \mathcal{E}_{\mathrm{full}}.$$

Dual Formulation of Bethe Approximation

Definition

We define

$$Z_{\mathrm{B}}^{\mathrm{SPA}}(\mathsf{N}, \boldsymbol{\mu}) := \frac{\prod_f Z_f(\mathsf{N}, \boldsymbol{\mu})}{\prod_e Z_e(\mathsf{N}, \boldsymbol{\mu})}.$$

$$Z_{\mathrm{B}}^{\mathrm{SPA}}(\mathsf{N}) := \max Z_{\mathrm{B}}^{\mathrm{SPA}}(\mathsf{N}, \boldsymbol{\mu}),$$

$$\text{s.t. } \boldsymbol{\mu} \text{ is a SPA fixed-point message.}$$

Characterization of the Bethe Approximation

Characterization of the Bethe Approximation

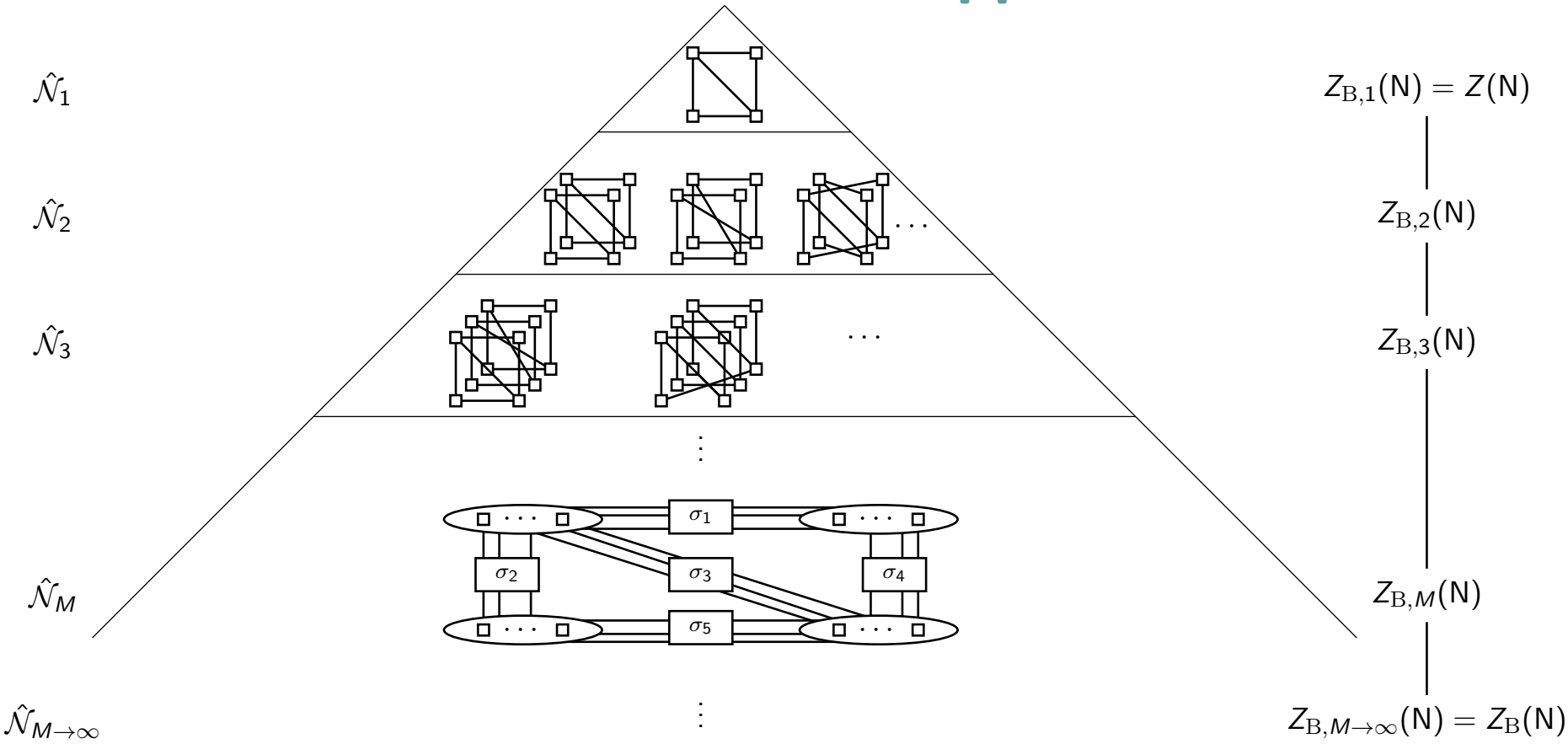

Definition

The degree-M Bethe partition function is defined to be

$$Z_{\mathrm{B},M}(\mathsf{N}) := \left(\left\langle Z(\hat{\mathsf{N}}) \right\rangle_{\hat{\mathsf{N}} \in \hat{\mathcal{N}}_M} \right)^{1/M} = \left(\frac{1}{|\hat{\mathcal{N}}_M|} \sum_{\hat{\mathsf{N}} \in \hat{\mathsf{N}}_M} Z(\hat{\mathsf{N}}) \right)^{1/M} .$$

Characterization of the Bethe Approximation

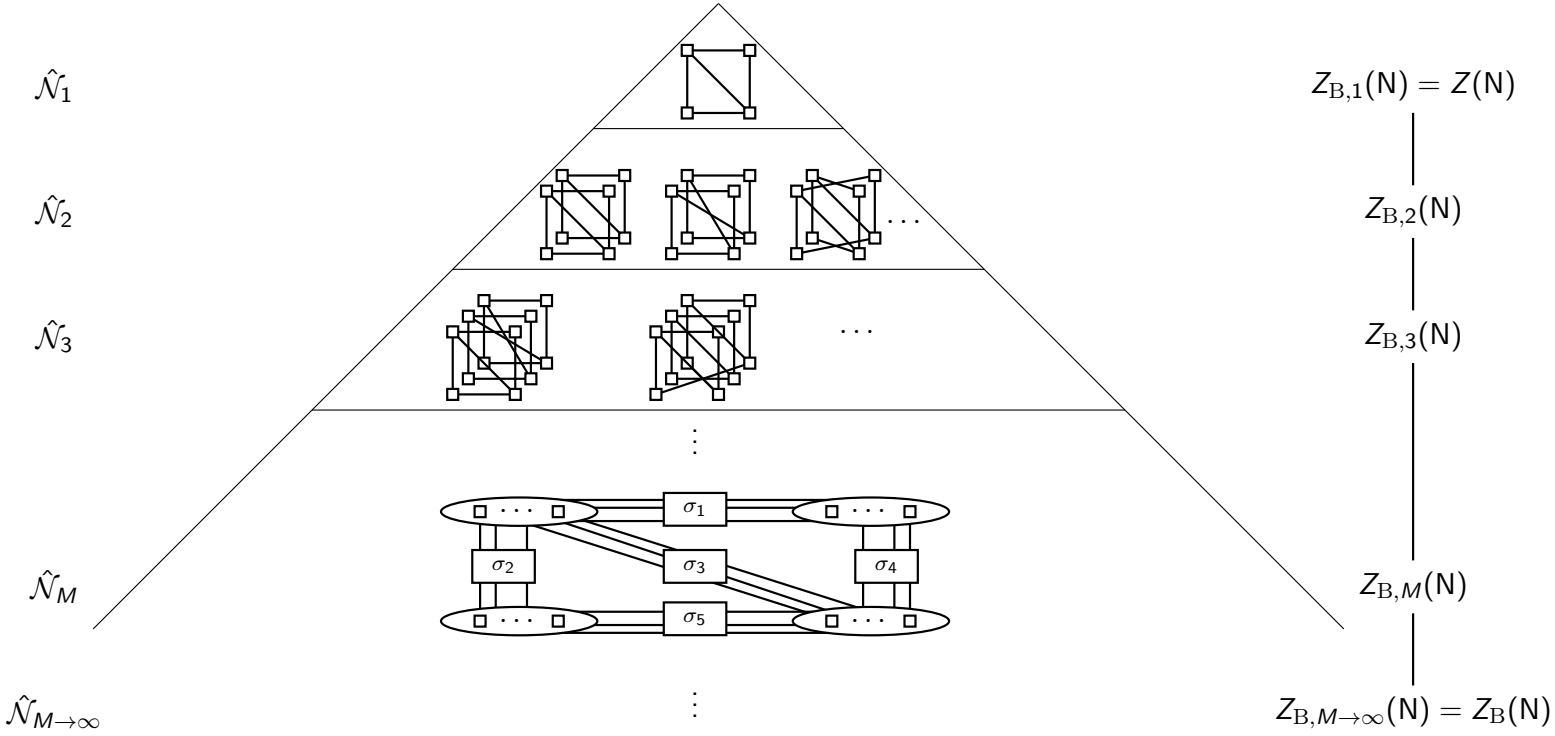

Theorem

[Vontobel, 2013] For any S-NFG N*, it holds that*

$$\limsup_{M\to\infty} Z_{\mathrm{B},M}(\mathsf{N}) = Z_{\mathrm{B}}(\mathsf{N}).$$

Note $Z_{\mathrm{B}}(\mathsf{N})$ is defined via the minimum of the primal Bethe free energy function [Yedidia et al., 2005]. Note that for many S-NFGs,

$$Z_{\mathrm{B}}(\mathsf{N}) = Z_{\mathrm{B}}^{\mathrm{SPA}}(\mathsf{N}).$$

Quantum Case

Motivation

Motivation

We want to show that the characterization of the Bethe partition function for a DE-NFG N based on finite graph covers holds as well, i.e., we want to prove that

$$\limsup_{M\to\infty} Z_{\mathrm{B},M}(\mathsf{N}) = Z_{\mathrm{B}}^{\mathrm{SPA}}(\mathsf{N}).$$

Double-Edge Normal Factor Graphs (DE-NFGs)

Example of DE-NFGs

We are given a global function:

$$
\begin{aligned}
g(\boldsymbol{x}, \boldsymbol{x}') &:= f_1(x_1, x_2, x_3, x_1', x_2', x_3') \cdot f_2(x_1, x_4, x_1', x_4') \cdot f_3(x_2, x_5, x_2', x_5') \\
&\quad \cdot f_4(x_3, x_4, x_5, x_3', x_4', x_5') \\
&= f_1(\tilde{x}_1, \tilde{x}_2, \tilde{x}_3) \cdot f_2(\tilde{x}_1, \tilde{x}_4) \cdot f_3(\tilde{x}_2, \tilde{x}_5) \cdot f_4(\tilde{x}_3, \tilde{x}_4, \tilde{x}_5).
\end{aligned}
$$

The associated DE-NFG is given as follows.

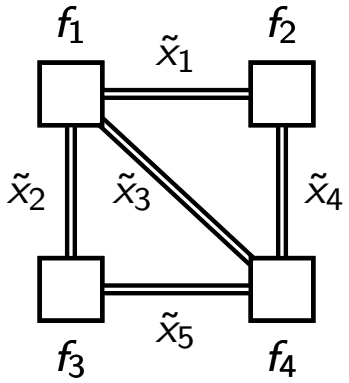

For simplicity, we define $\tilde{x}_e := (x_e, x_e') \in \mathcal{X}_e \times \mathcal{X}_e$ for each edge e.

Definition of DE-NFGs [Cao and Vontobel, 2017]

A DE-NFG $\mathrm{N}(\mathcal{F}, \mathcal{E}_{\mathrm{full}}, \tilde{\mathcal{X}})$ is a graph $(\mathcal{F}, \mathcal{E}_{\mathrm{full}})$ equipped with:

1. vertex set $\mathcal{F}$ and edge set $\mathcal{E}_{\mathrm{full}}$;
2. a set of local functions $\mathcal{F}$;
3. for every $f \in \mathcal{F}$, the boundary set ∂f;
4. for every $e \in \mathcal{E}_{\mathrm{full}}$, alphabet $\tilde{\mathcal{X}}_e$ for variable $\tilde{x}_e$ associated with edge e;
5. for every $f \in \mathcal{F}$, $$\tilde{\mathcal{X}}_f := \prod_{e \in \partial f} \tilde{\mathcal{X}}_e;$$
6. for every $f \in \mathcal{F}$, $$\begin{aligned} f : \tilde{\mathcal{X}}_f &\to \mathbb{C} \\ \tilde{\boldsymbol{x}}_{\partial f} &\mapsto f(\tilde{\boldsymbol{x}}_{\partial f}). \end{aligned}$$

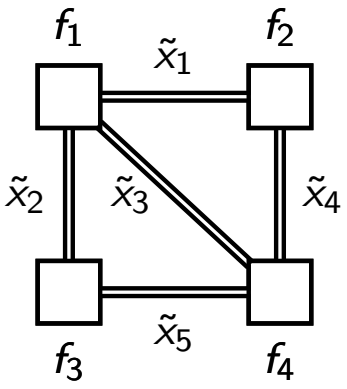

Assumption

The square matrix $(f(\boldsymbol{x}_{\partial f}, \boldsymbol{x}'_{\partial f}))_{\boldsymbol{x}_{\partial f}, \boldsymbol{x}'_{\partial f}}$ *is a complex-valued, Hermitian, PSD matrix.*

Details of DE-NFGs

In particular, we define:

1. the alphabet $\tilde{\mathcal{X}}$ to be the set

$$\tilde{\mathcal{X}} := \prod_{e \in \mathcal{E}_{\text{full}}} \tilde{\mathcal{X}}_e;$$

2. the global function g to be mapping

$$\begin{aligned} g : \tilde{\mathcal{X}} &\to \mathbb{C} \\ \tilde{\boldsymbol{x}} &\mapsto \prod_{f \in \mathcal{F}} f(\tilde{\boldsymbol{x}}_{\partial f}) \end{aligned}$$

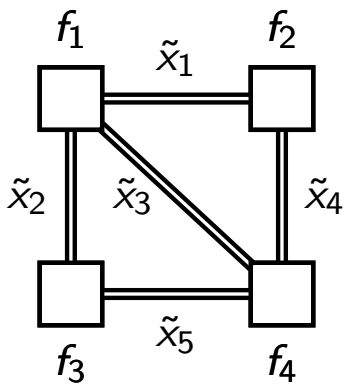

3. the partition function $Z(\mathsf{N})$ to be

$$Z(\mathsf{N}) := \sum_{\tilde{\boldsymbol{x}} \in \tilde{\mathcal{X}}} g(\tilde{\boldsymbol{x}}) = \sum_{\tilde{\boldsymbol{x}}} \prod_{f} f(\tilde{\boldsymbol{x}}_{\partial f}).$$

Note

- One can verify that $Z(\mathsf{N}) \in \mathbb{R}_{\geq 0}$.
- S-NFGs are special cases of DE-NFGs.

Sum-Product Algorithm (SPA)

SPA

Let $e = (f, f') \in \mathcal{E}_{\text{full}}$. The message $\boldsymbol{\mu}_{e \to f'} \in \mathbb{C}^{|\tilde{\mathcal{X}}_e|}$ is updated based on the following rule:

$$\mu_{e \to f'}(\tilde{z}_e) \propto \sum_{\tilde{\boldsymbol{x}}_{\partial f} : \tilde{x}_e = \tilde{z}_e} f(\tilde{\boldsymbol{x}}_{\partial f}) \cdot \prod_{e' \in \partial f \setminus \{e\}} \mu_{e' \to f}(\tilde{x}_{e'}).$$

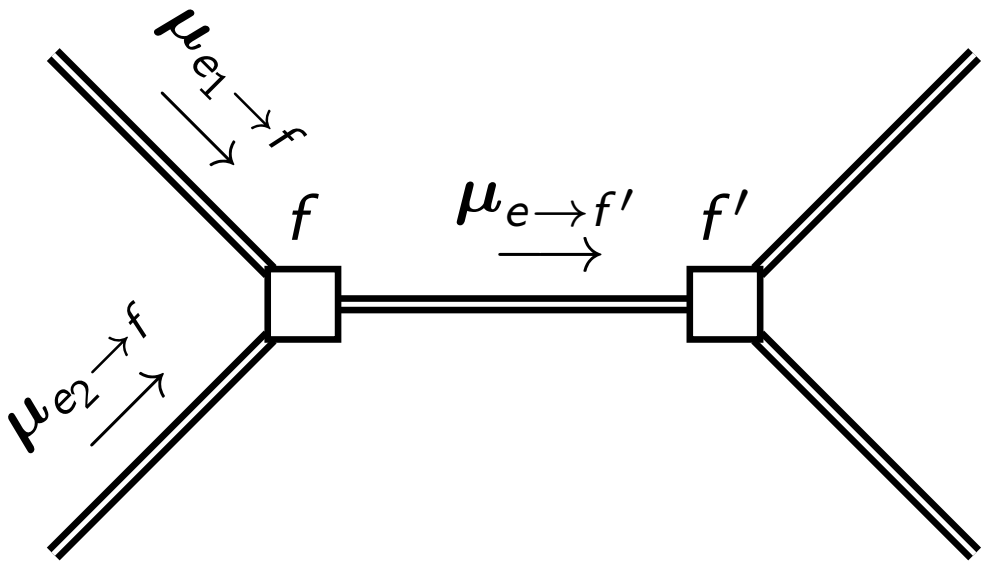

SPA

Definition

Given message $\boldsymbol{\mu}$, we define

$$Z_f(\mathsf{N}, \boldsymbol{\mu}) := \sum_{\mathbf{x}_{\partial f}} f(\tilde{\boldsymbol{x}}_{\partial f}) \prod_{e \in \partial f} \mu_{e \to f}(\tilde{x}_e), \qquad f \in \mathcal{F},$$

$$Z_e(\mathsf{N}, \boldsymbol{\mu}) := \sum_{x_e} \mu_{e \to f}(\tilde{x}_e) \mu_{e \to f'}(\tilde{x}_e), \qquad e = (f, f') \in \mathcal{E}_{\text{full}}.$$

Dual Formulation of Bethe Approximation

Definition

We define

$$Z_{\mathrm{B}}^{\mathrm{SPA}}(\mathsf{N}, \boldsymbol{\mu}) := \frac{\prod_f Z_f(\mathsf{N}, \boldsymbol{\mu})}{\prod_e Z_e(\mathsf{N}, \boldsymbol{\mu})}.$$

$$Z_{\mathrm{B}}^{\mathrm{SPA}}(\mathsf{N}) := \max Z_{\mathrm{B}}^{\mathrm{SPA}}(\mathsf{N}, \boldsymbol{\mu}),$$

$$\text{s.t. } \boldsymbol{\mu} \text{ is a SPA fixed-point message.}$$

Characterizing Bethe Partition Function

Characterizing Bethe Partition Function

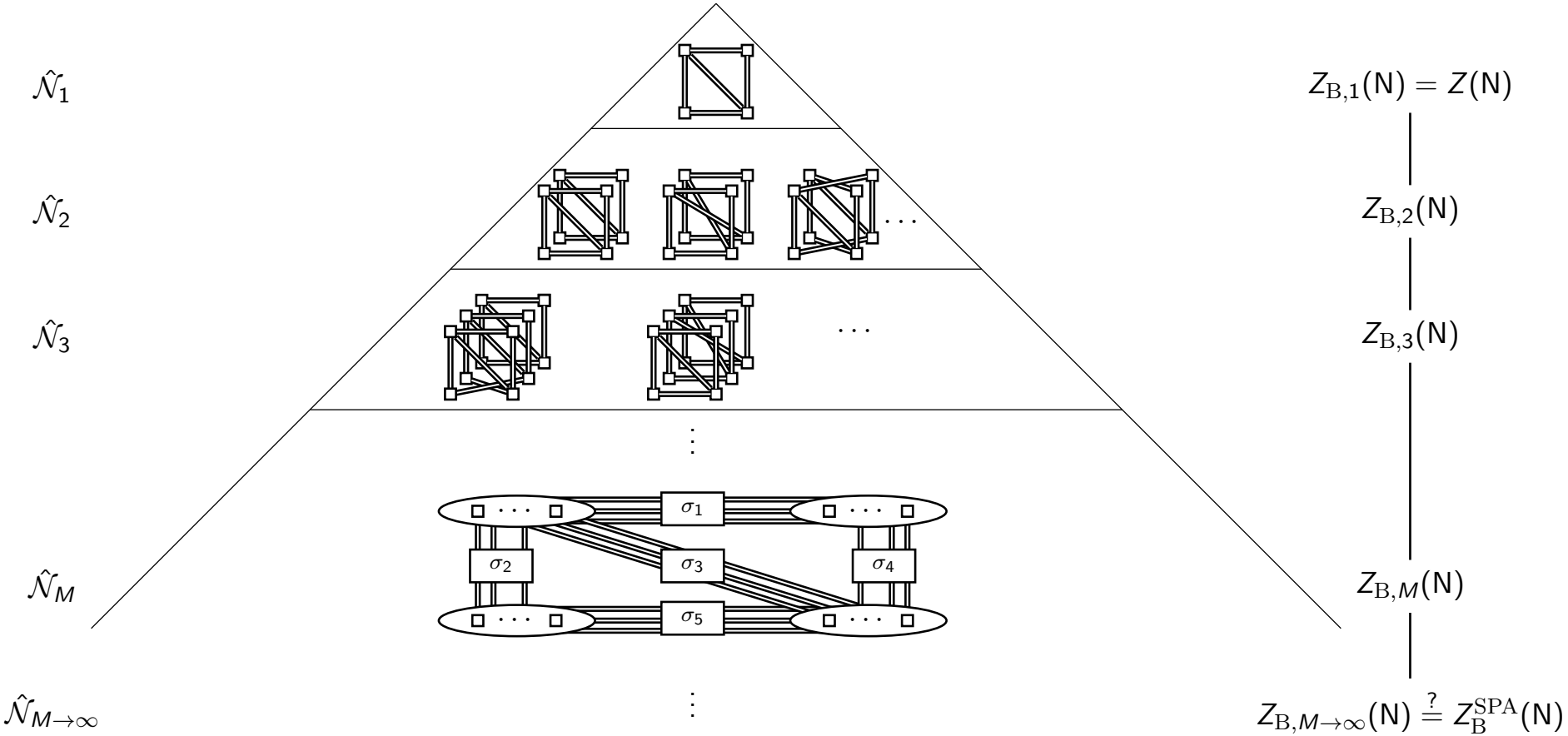

Conjecture

Consider some DE-NFG N. *It holds that*

$$\limsup_{M\to\infty} Z_{\mathrm{B},M}(\mathsf{N}) = Z_{\mathrm{B}}^{\mathrm{SPA}}(\mathsf{N}).$$

Note We can prove the conjecture for some DE-NFGs.

Methods for Proving the Conjecture

We can prove the conjecture for some DE-NFGs using

- loop calculus transform (LCT)
  [Chertkov and Chernyak, 2006]

- symmetric subspace transform (SST)
  (new, motivated by related calculations in the theoretical physics literature)

Loop Calculus Transform (LCT)

Example of Factor Graph Transform

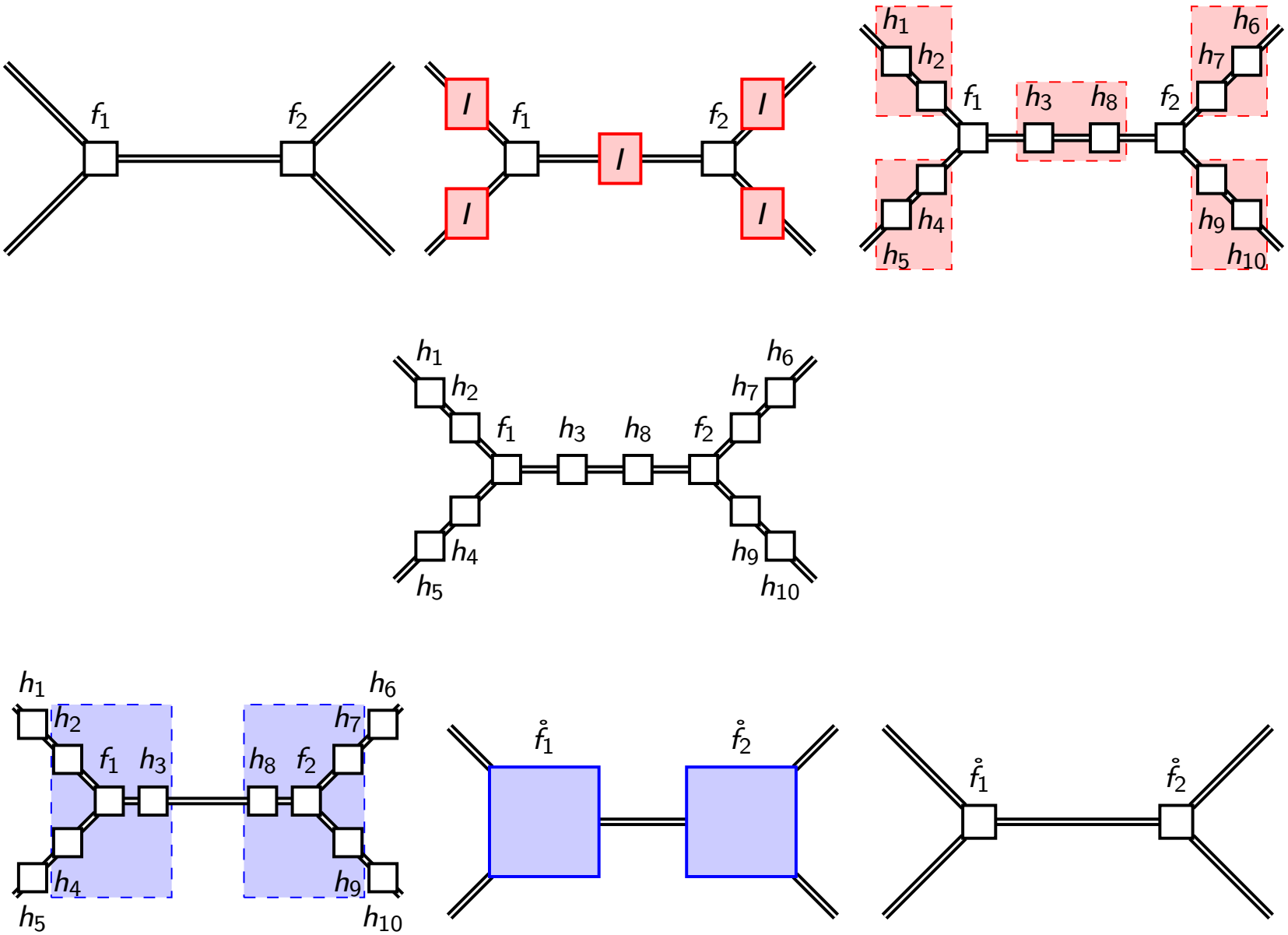

Properties of LCT

We define

- $\mathring{\mathrm{N}}$ to be the LCT of the DE-NFG N;
- the function $\mathring{g}$ to be its global function;
- $\mathring{\tilde{0}} := (0, 0)$.

The DE-NFG $\mathring{\mathrm{N}}$ has the following properties:

- $Z(\mathrm{N}) = Z(\mathring{\mathrm{N}})$;
- $Z_{\mathrm{B}}(\mathrm{N}, \boldsymbol{\mu}) = Z_{\mathrm{B}}(\mathring{\mathrm{N}}, \mathring{\boldsymbol{\mu}}) = \mathring{g}(\mathring{\tilde{\mathbf{0}}})$.
- The message vector $\mathring{\boldsymbol{\mu}}$ where $\mathring{\mu}(\mathring{\tilde{x}}_e) := \begin{cases} 1 & \mathring{x}_e = \mathring{\tilde{0}}, \\ 0 & \text{otherwise.} \end{cases}$ is a fixed-point message vector of the SPA for $\mathring{\mathrm{N}}$;

Symmetric Subspace Transform (SST)

Example of SST

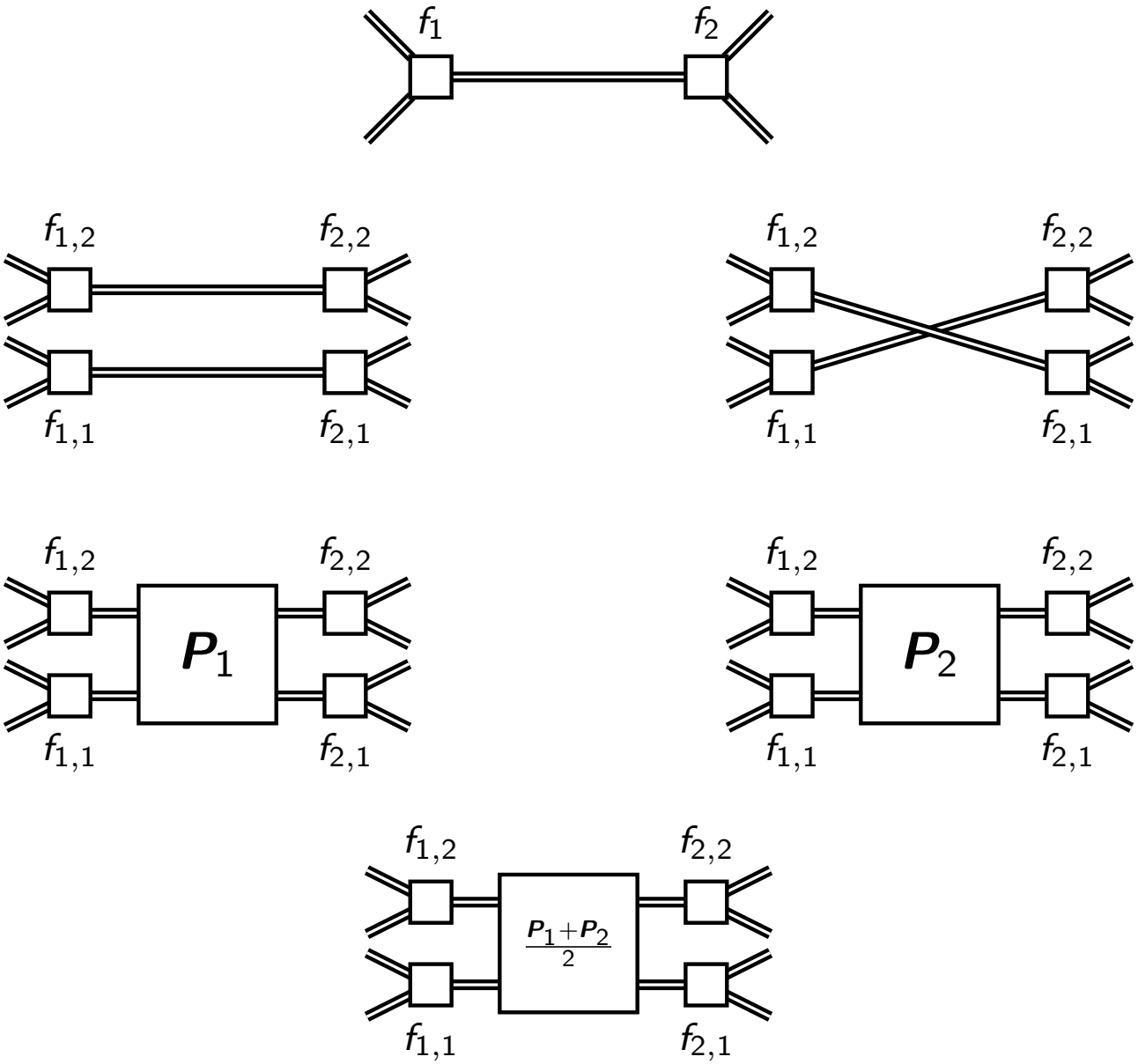

Illustrating SST

In particular, for binary alphabet, i.e., $|\mathcal{X}_e| = 2$ and $M = 2$, we have

$$\boldsymbol{P}_1 = \begin{bmatrix} 1 & 0 & 0 & 0 \\ 0 & 1 & 0 & 0 \\ 0 & 0 & 1 & 0 \\ 0 & 0 & 0 & 1 \end{bmatrix}, \ \boldsymbol{P}_2 = \begin{bmatrix} 1 & 0 & 0 & 0 \\ 0 & 0 & 1 & 0 \\ 0 & 1 & 0 & 0 \\ 0 & 0 & 0 & 1 \end{bmatrix}, \ \frac{1}{2}\boldsymbol{P}_1 + \frac{1}{2}\boldsymbol{P}_2 = \begin{bmatrix} 1 & 0 & 0 & 0 \\ 0 & 1/2 & 1/2 & 0 \\ 0 & 1/2 & 1/2 & 0 \\ 0 & 0 & 0 & 1 \end{bmatrix}.$$

Motivated by related calculations in the theoretical physics literature (see [Wood et al., 2015] for details), we have

$$\frac{1}{2}\boldsymbol{P}_1 + \frac{1}{2}\boldsymbol{P}_2 = \int_{\boldsymbol{\psi}_e \in \mathbb{CP}^{15}} (\check{\boldsymbol{\psi}}_e \check{\boldsymbol{\psi}}_e^{\mathsf{H}})^{\otimes 2} \, \mathrm{d}\mu_{\mathrm{FS}}(\boldsymbol{\psi}_e),$$

where

- $\mathbb{CP}^{d-1}$ is the complex projective space with $d = |\tilde{\mathcal{X}}_e|^M$;
- $\check{\boldsymbol{\psi}}_e$ is defined to be $\check{\boldsymbol{\psi}}_e := \boldsymbol{\psi}_e / \|\boldsymbol{\psi}_e\| \in \mathbb{C}^{|\tilde{\mathcal{X}}_e|}$;
- $(\check{\boldsymbol{\psi}}_e \check{\boldsymbol{\psi}}_e^{\mathsf{H}})^{\otimes M}$ is the M-fold tensor product of the matrix $\check{\boldsymbol{\psi}}_e \check{\boldsymbol{\psi}}_e^{\mathsf{H}}$;
- μ_{FS} denotes the Fubini-Study (FS) measure.

Illustrating SST

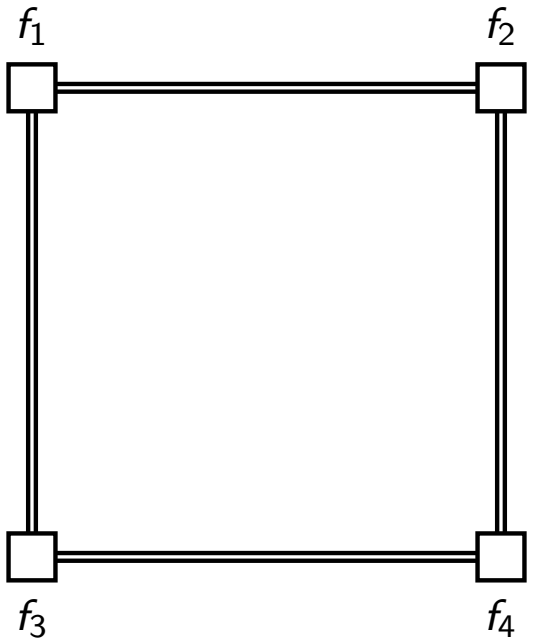

The partition function of the above DE-NFG equals

$$Z(\mathsf{N}) = Z_{\mathrm{B},1}(\mathsf{N}).$$

Illustrating SST

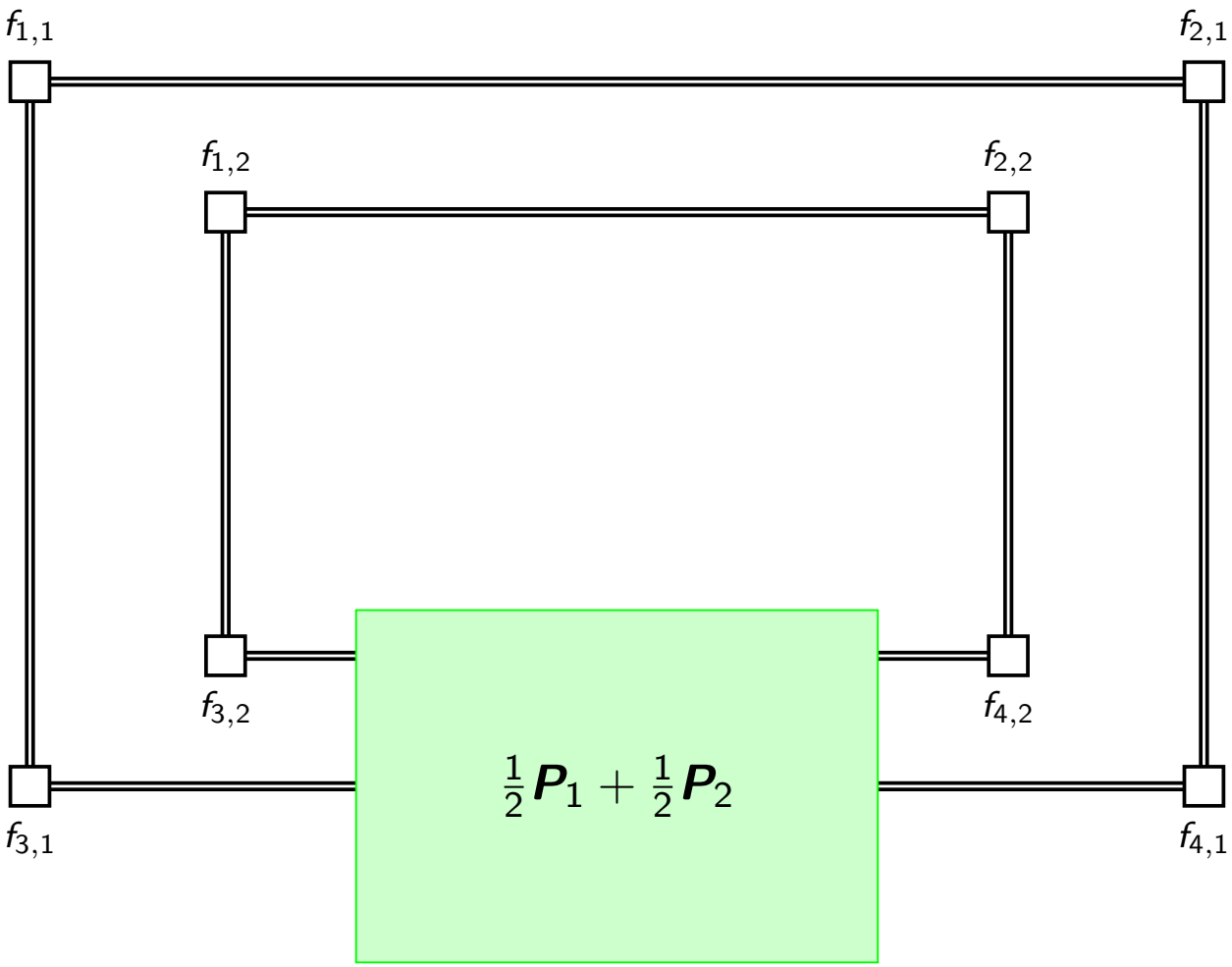

The partition function of the above DE-NFG equals $(Z_{\mathrm{B},2}(\mathrm{N}))^2$.

Illustrating SST

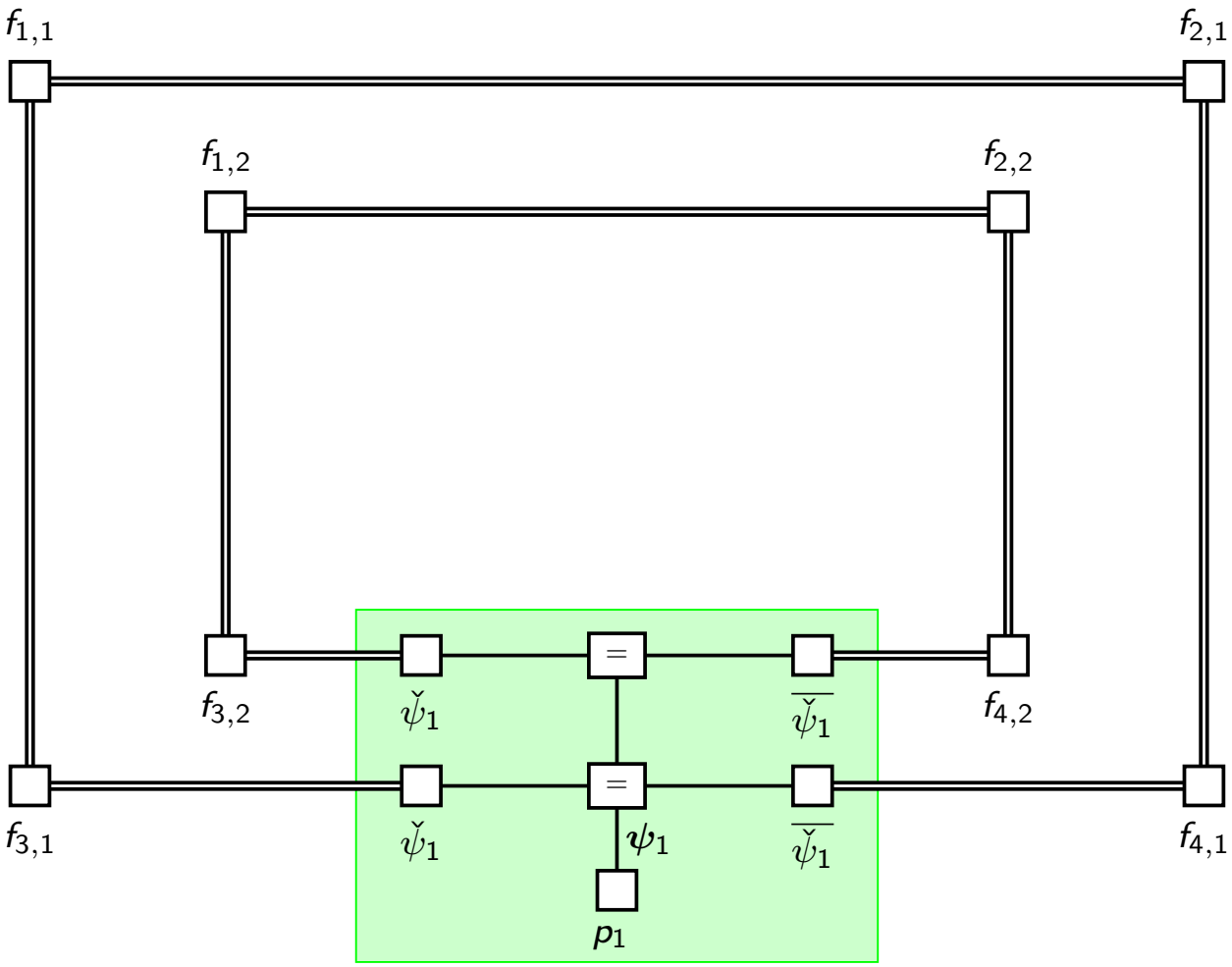

Illustrating SST

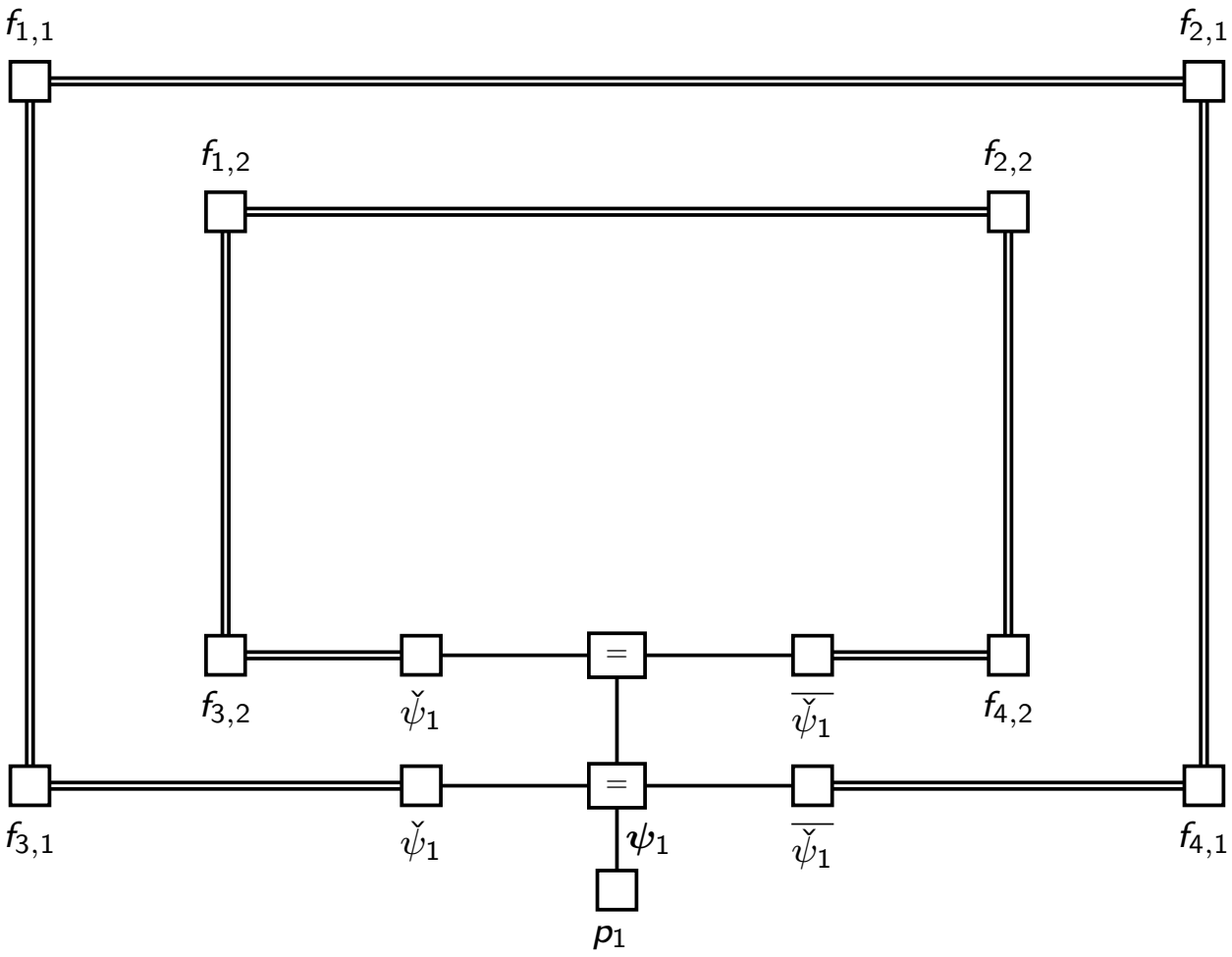

Illustrating SST

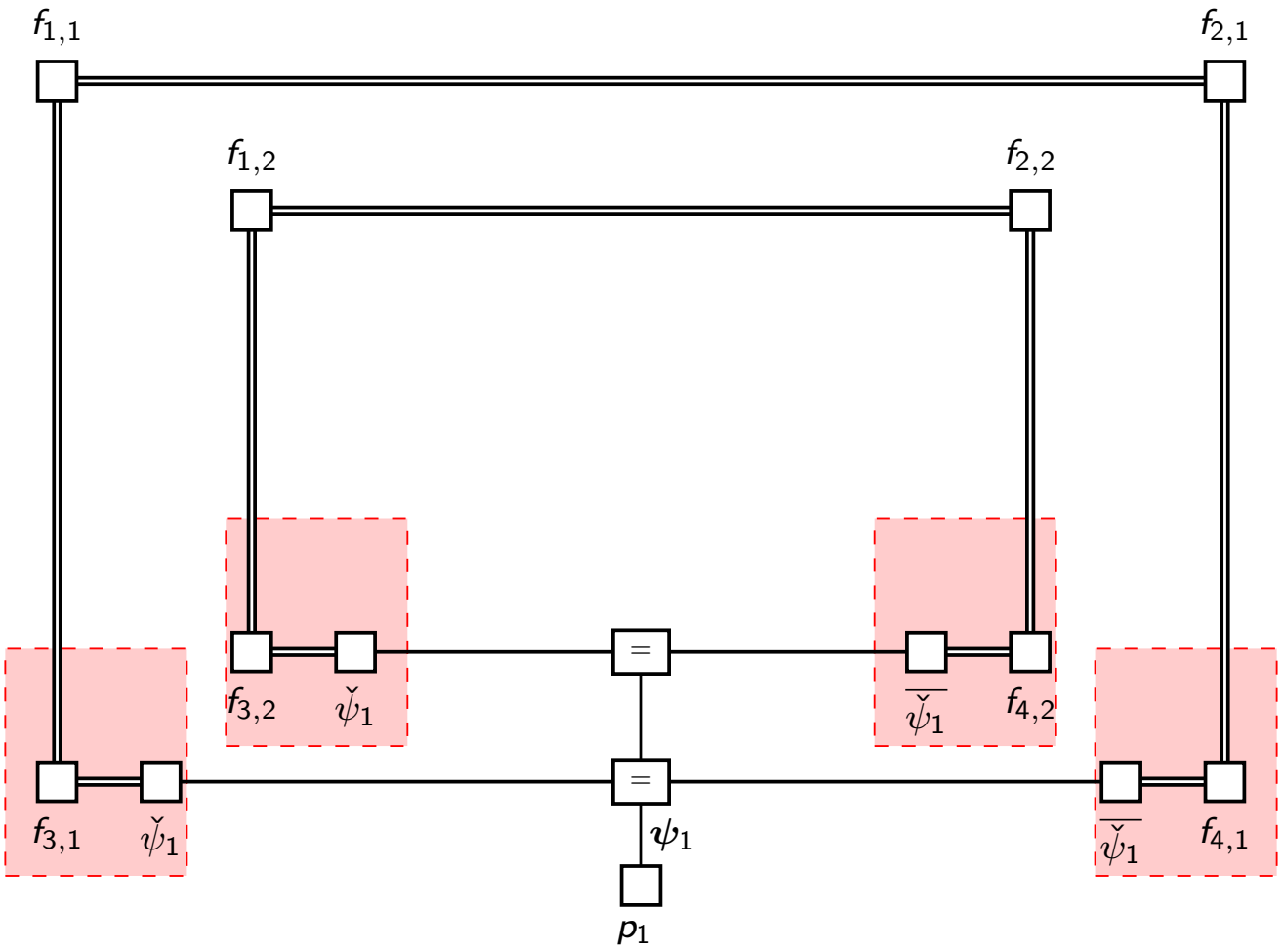

Illustrating SST

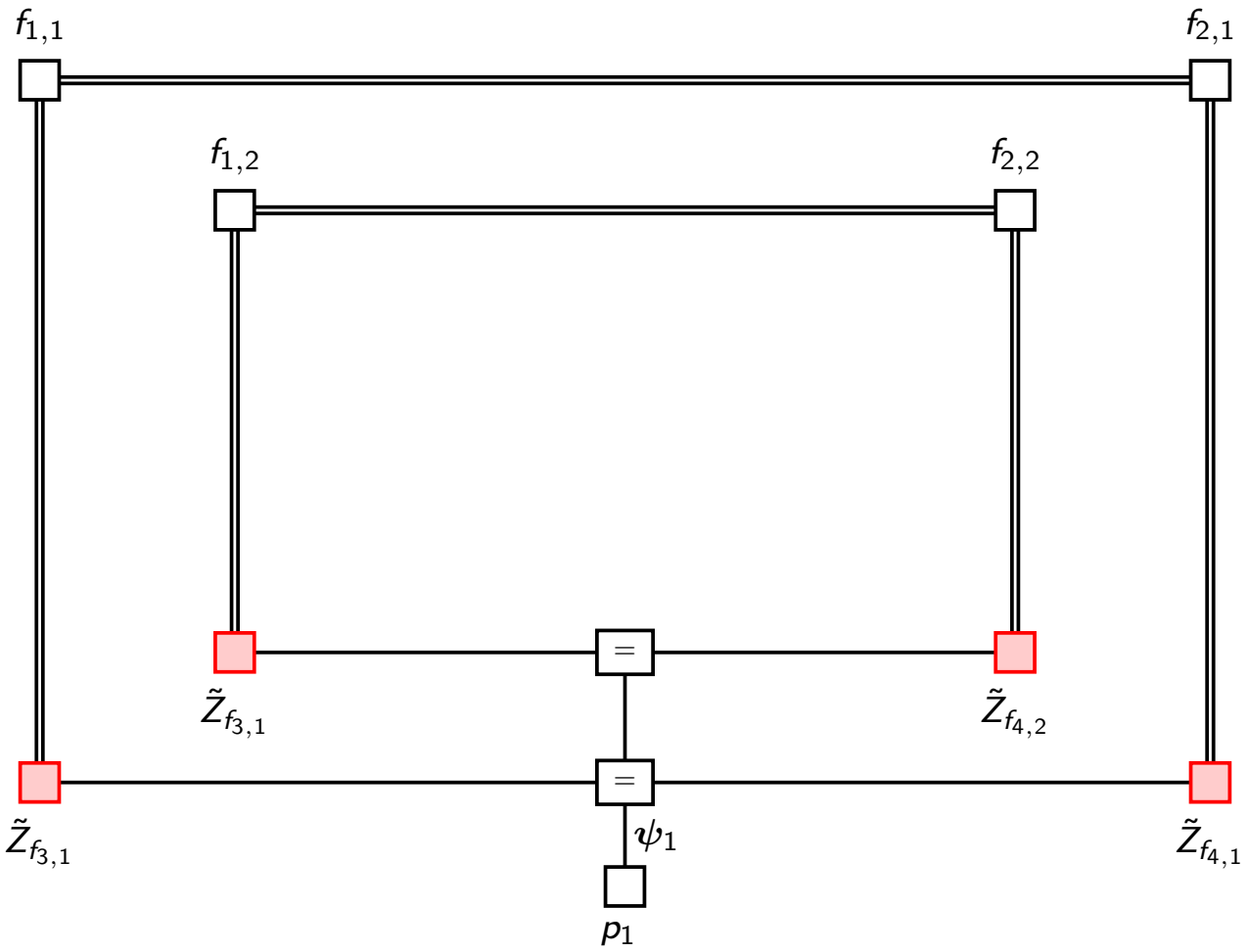

$$\tilde{Z}_{f_{i,1}} = \tilde{Z}_{f_{i,2}},\ i = 3, 4.$$

Illustrating SST

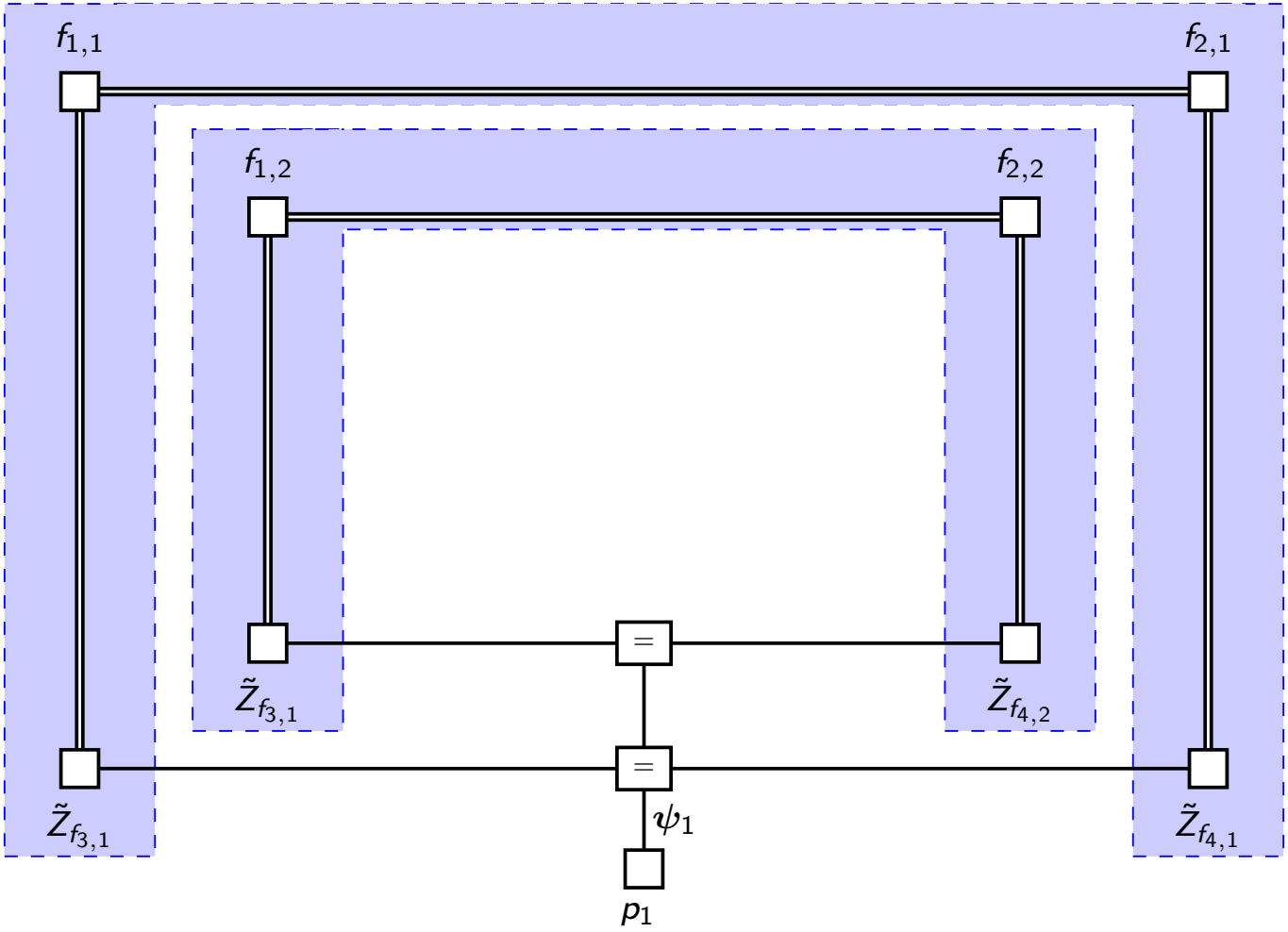

Illustrating SST

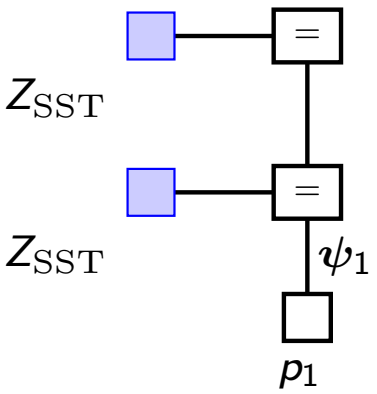

Illustrating SST

When $\boldsymbol{\psi}_1$ is fixed, i.e., p_1 is fixed, the factor graph turns out to be the following factor graph.

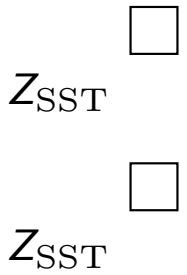

For any M, we apply the same procedure and the factor graph turns outs to be

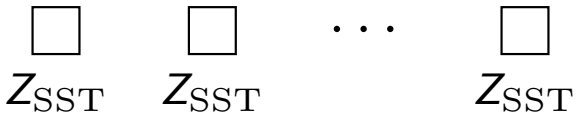

Note that it is a forest-structured factor graph whose partition function equals

$$\left(Z_{\mathrm{SST}}(\check{\boldsymbol{\psi}}_1)\right)^M.$$

We have

$$Z_{\mathrm{B},M}(\mathsf{N}) = \alpha_{\mathsf{N},M} \cdot \left(\int \left(Z_{\mathrm{SST}}(\check{\boldsymbol{\psi}}_1)\right)^M \, \mathrm{d}\mu_{\mathrm{FS}}(\check{\boldsymbol{\psi}}_1) \right)^{1/M},$$

for some $\alpha_{\mathsf{N},M}$.

An Easily Checkable Condition for the Conjecture

Consider a DE-NFG N whose LCT $\mathring{\mathrm{N}}$ satisfies the following condition: for every function $\mathring{f}$, it holds that

$$\mathring{f}(\mathring{\tilde{\mathbf{0}}}) > \sum_{\mathring{\tilde{\boldsymbol{x}}}_f \neq \mathring{\tilde{\mathbf{0}}}} |\mathring{f}(\mathring{\tilde{\boldsymbol{x}}}_f)|,$$

then we can prove the conjecture.
Using Cauchy-Schwartz inequality, we have

$$\left|(g_{\mathrm{SST}}(\check{\boldsymbol{\psi}}))^{1/M}\right| \leq \left|(g_{\mathrm{SST}}(\check{\boldsymbol{\psi}}_0))^{1/M}\right|$$

$$\left|(g_{\mathrm{SST}}(\check{\boldsymbol{\psi}}))^{1/M}\right| \leq \prod_f \left(\sum_{\mathring{\tilde{\boldsymbol{x}}}_{\partial f, f}} \left|\mathring{f}(\mathring{\tilde{\boldsymbol{x}}}_{\partial f, f})\right| \cdot \prod_{e \in \partial f} \left|\check{\boldsymbol{\psi}}_e(\mathring{\tilde{x}}_{e,f})\right| \right).$$

Conclusion

Conclusion

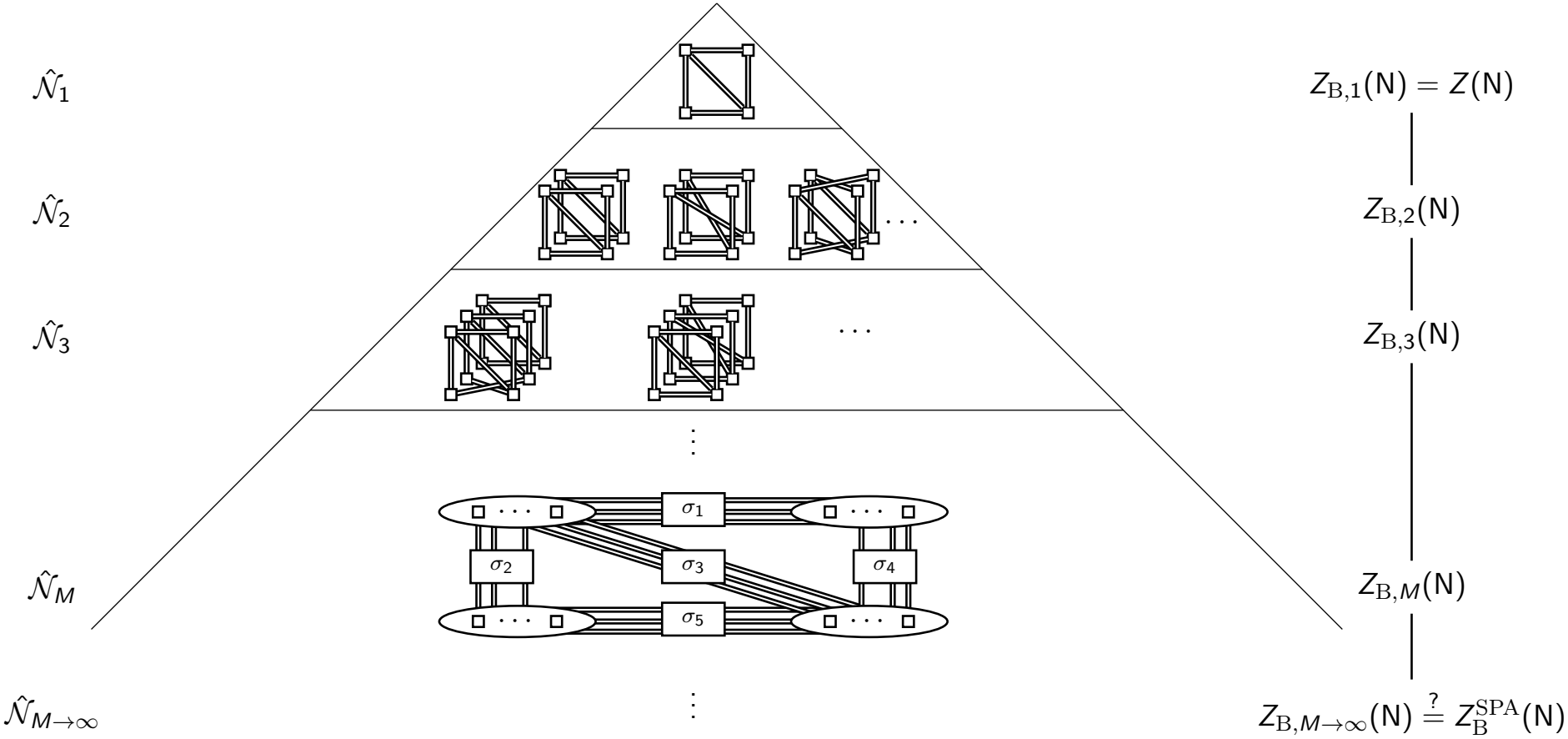

- We define SST for the DE-NFG.
- We can prove the conjecture for some DE-NFGs.

An extended version for our paper will be posted on arxiv.

Selected References I

Cao, M. X. and Vontobel, P. O. (2017).
Double-edge factor graphs: Definition, properties, and examples.
In *Proc. IEEE Inf. Theory Workshop (ITW)*, pages 136–140, Kaohsiung, Taiwan.

Chertkov, M. and Chernyak, V. Y. (2006).
Loop series for discrete statistical models on graphs.
J. Stat. Mech: Theory Exp., 2006(06):6009–6009.

Vontobel, P. O. (2013).
Counting in graph covers: A combinatorial characterization of the Bethe entropy function.
IEEE Trans. Inf. Theory, 59(9):6018–6048.

Selected References II

Wood, C. J., Biamonte, J. D., and Cory, D. G. (2015).
Tensor networks and graphical calculus for open quantum systems.
Quantum Info. Comput., 15(9-10):759–811.

Yedidia, J. S., Freeman, W. T., and Weiss, Y. (2005).
Constructing free-energy approximations and generalized belief propagation algorithms.
IEEE Trans. Inf. Theory, 51(7):2282–2312.