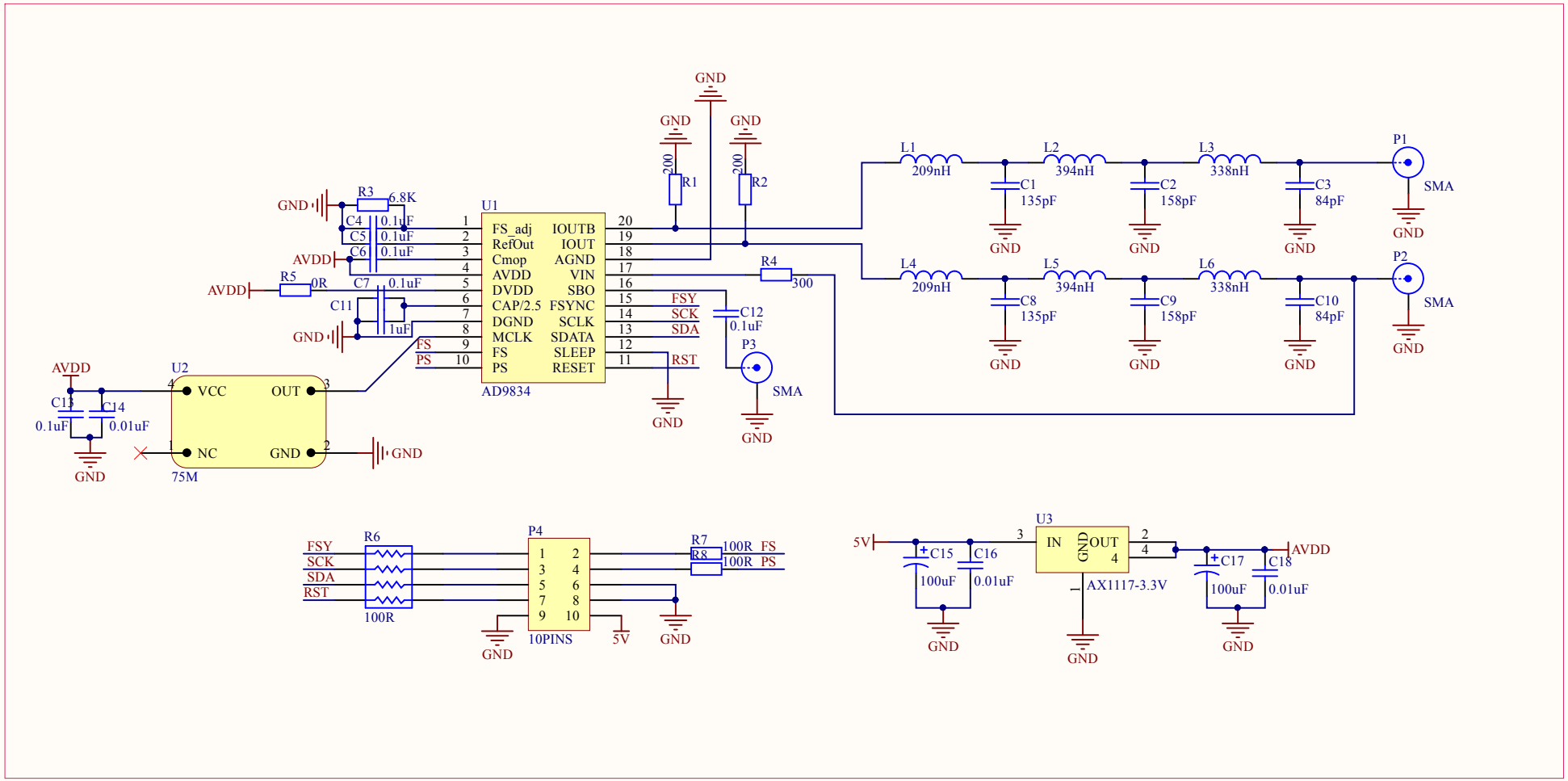

Title: AD9834.SchDoc		
Project: AD9834.PrjPcb		康威科技工作室
Size: A4	Revision: *	Author: *
Data: 2015/7/22	Company: *	

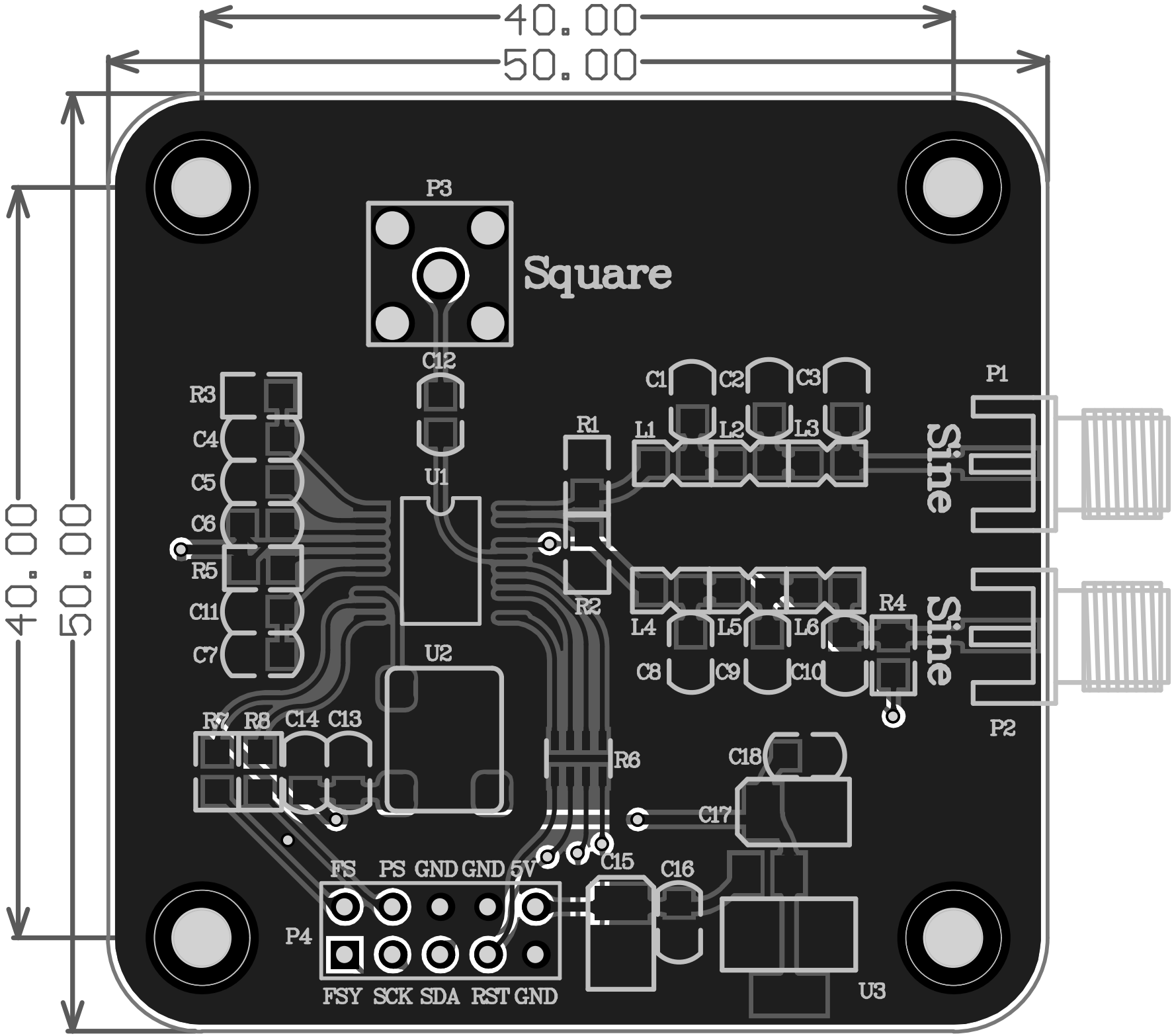
40.00
50.00
40.00
50.00
P3
Square
C12
R3
C4
C5
C6
R5
C11
C7
U1
U2
R7
R8
C14
C13
R1
R2
L1
L2
L3
C1
C2
C3
L4
L5
L6
C8
C9
C10
R4
P1
Sine
Sine
P2
R6
C18
C17
C15
C16
U3
FS
PS
GND
GND
5V
P4
FSY
SCK
SDA
RST
GND