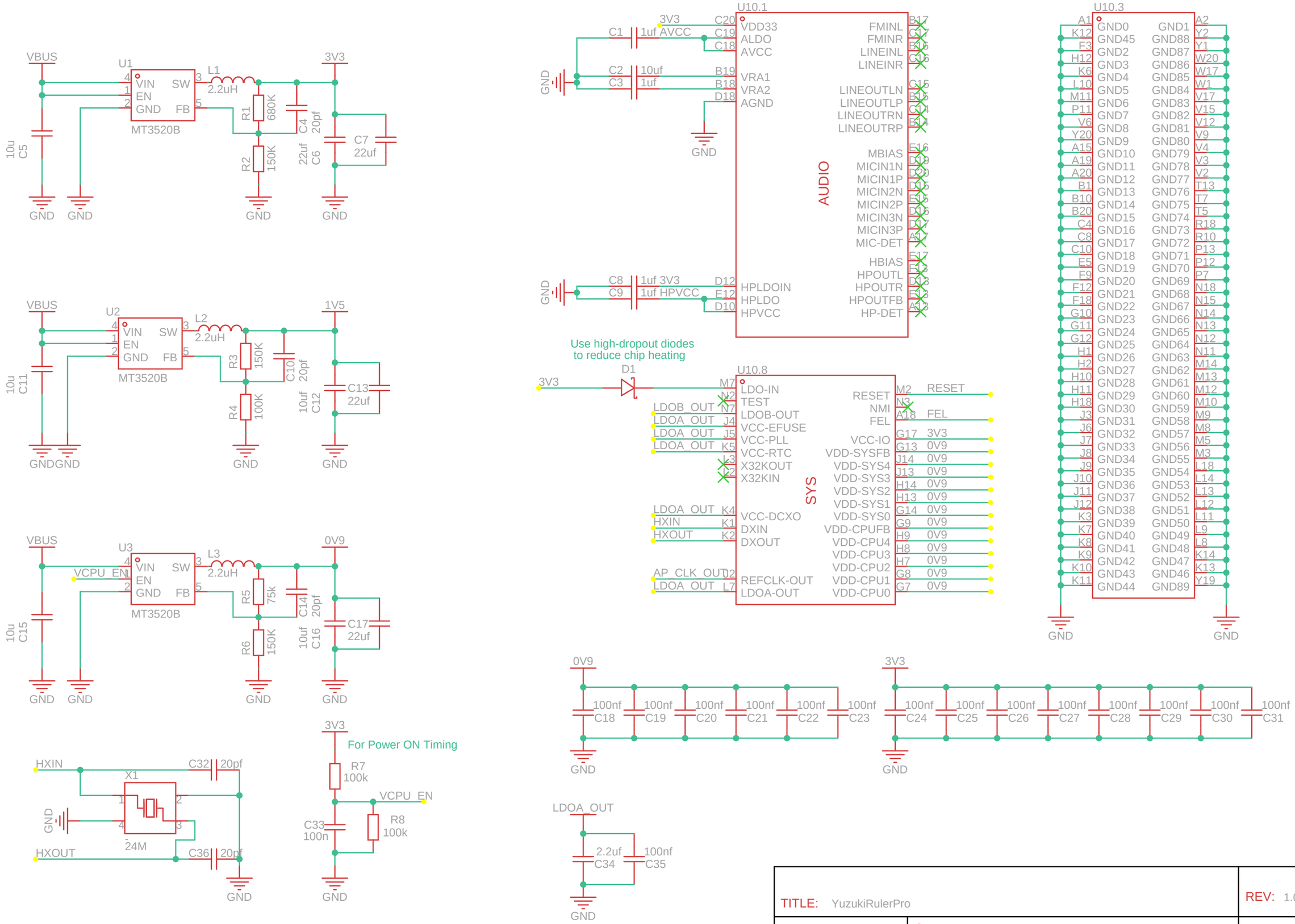

TITLE: YuzukiRulerPro		REV: 1.0
立创EDA	Company: YuzukiHD	Sheet: 1/1
	Date: 2021-09-08 Drawn By: GloomyGhost	

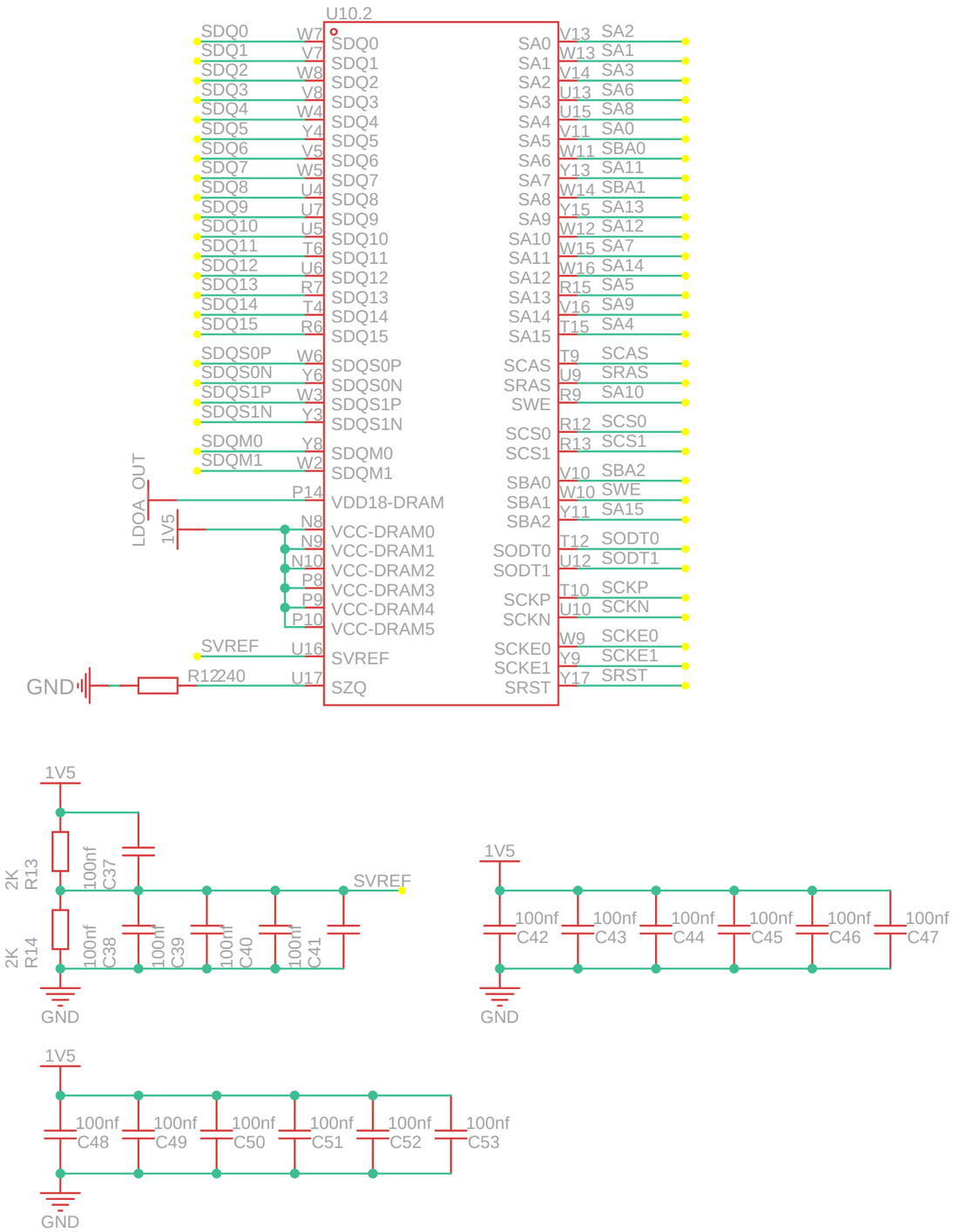

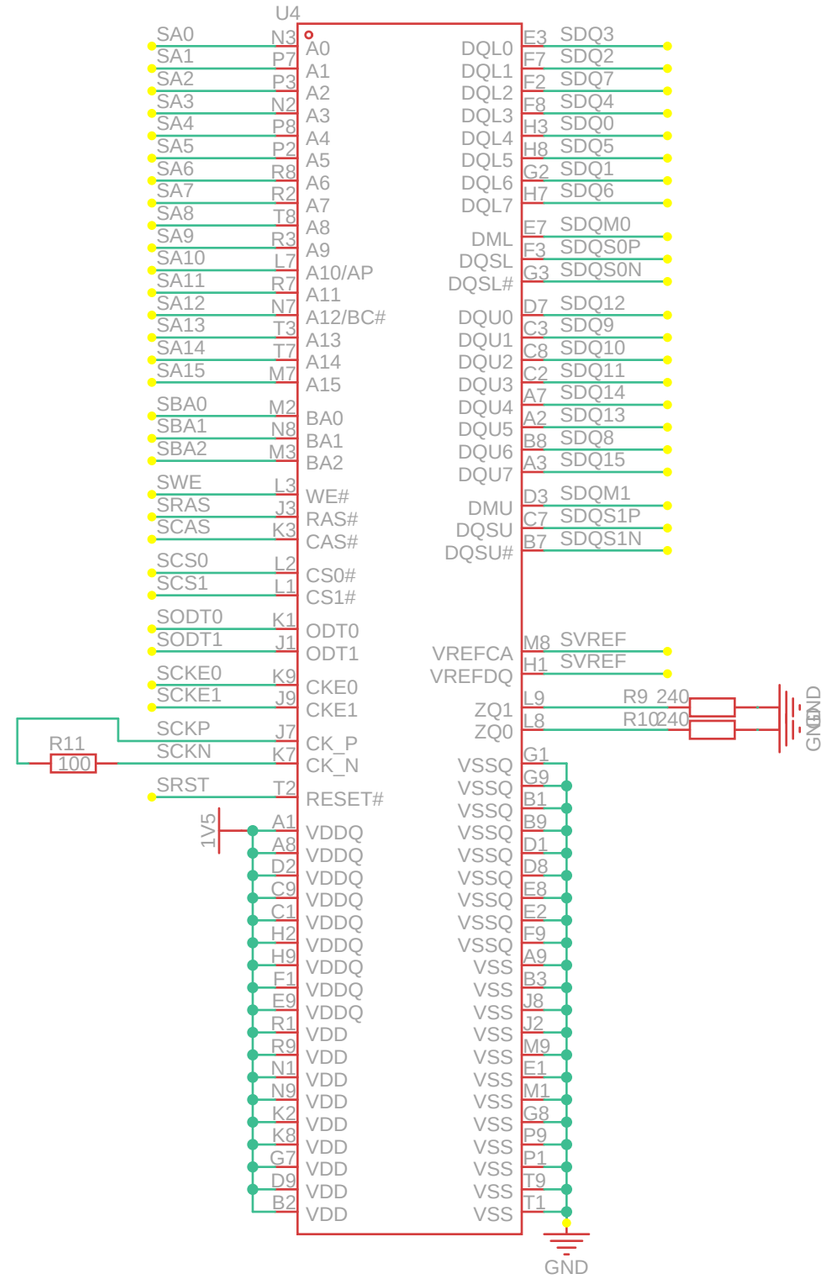

TITLE: YuzukiRulerPro		REV: 1.0
立创EDA	Company: YuzukiHD	Sheet: 1/1
	Date: 2021-09-08 Drawn By: GloomyGhost	

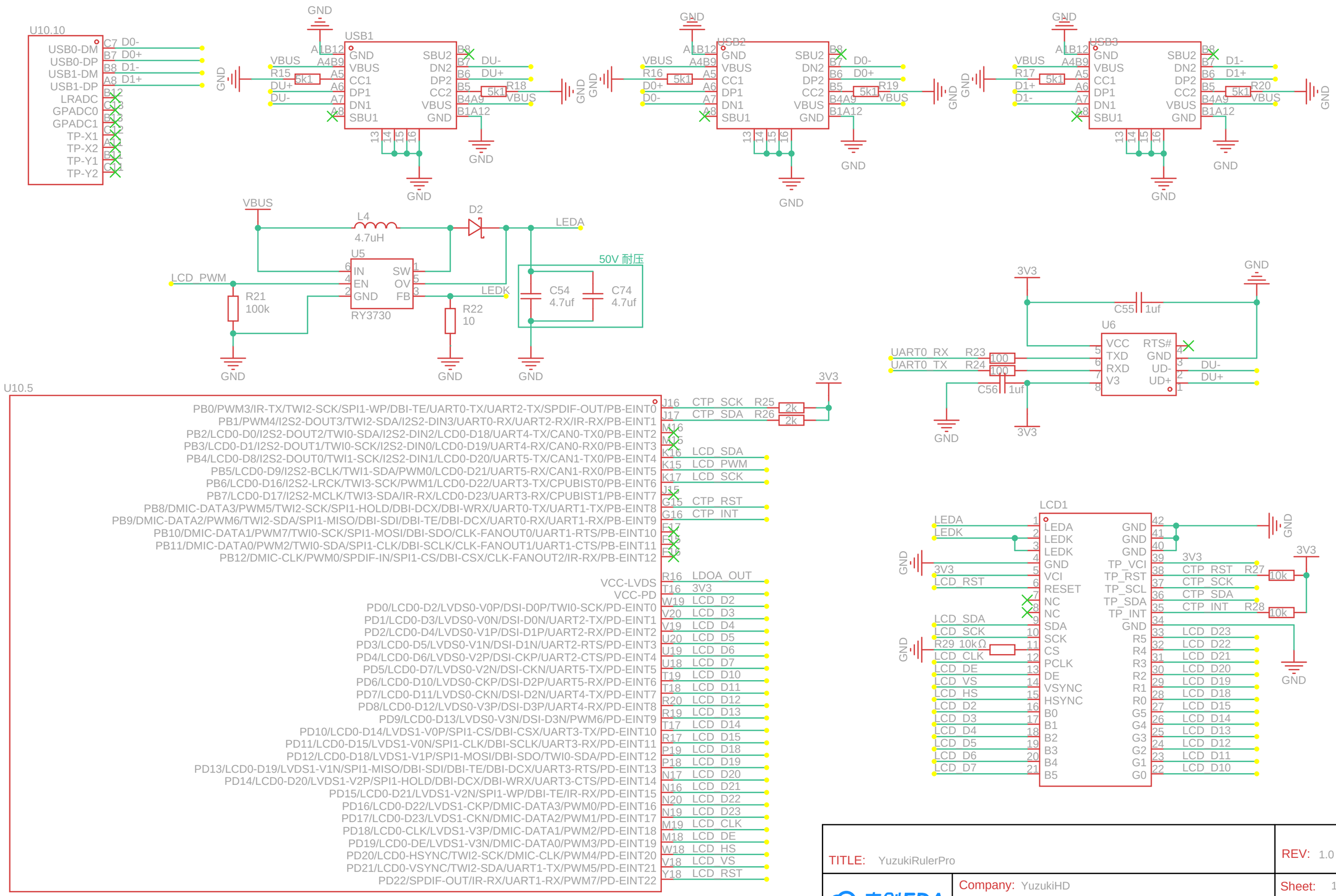

TITLE: YuzukiRulerPro		REV: 1.0
立创EDA	Company: YuzukiHD	Sheet: 1/1
	Date: 2021-09-08 Drawn By: GloomyGhost	

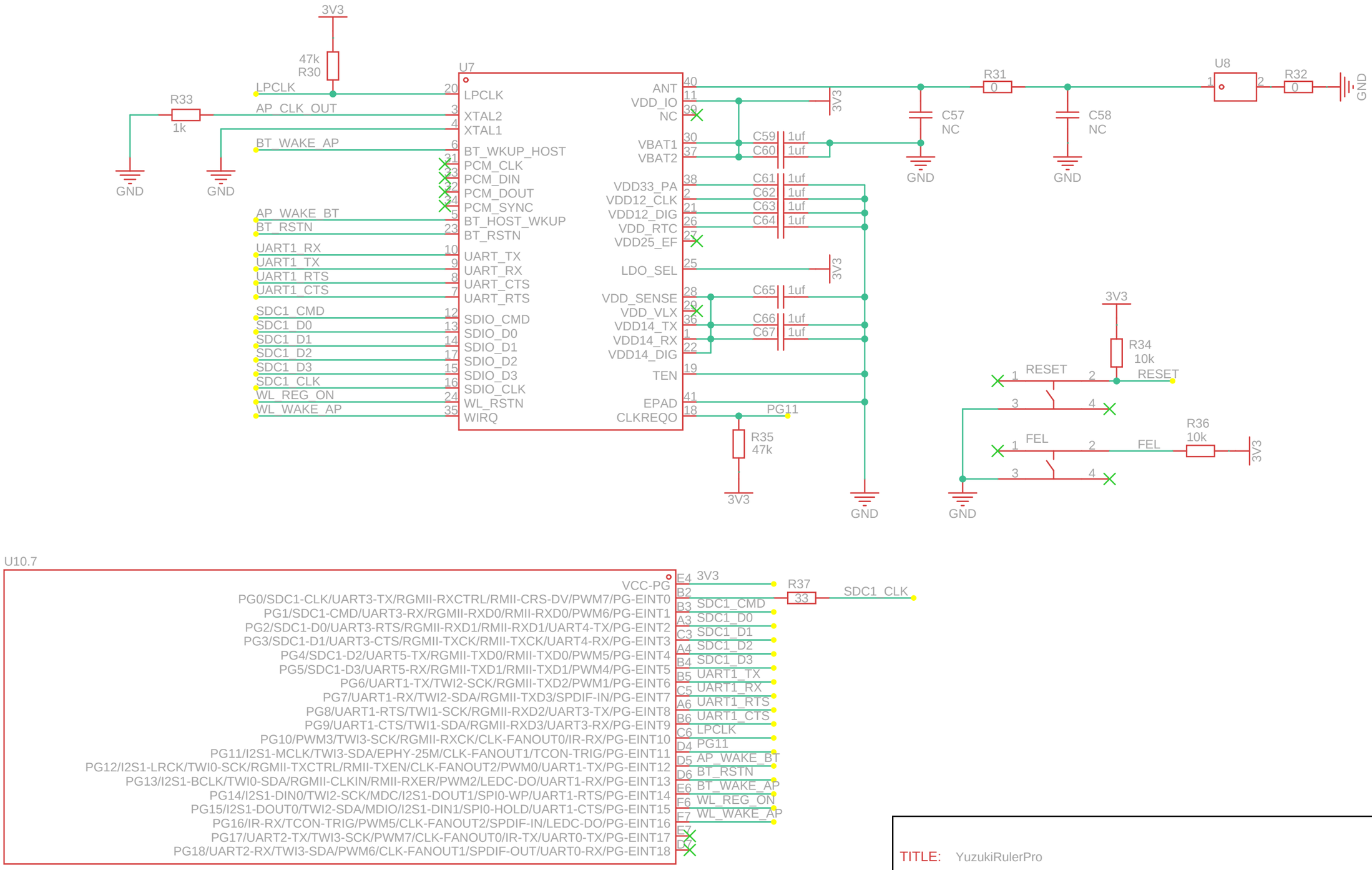

TITLE: YuzukiRulerPro		REV: 1.0
立创EDA	Company: YuzukiHD	Sheet: 1/1
	Date: 2021-09-08 Drawn By: GloomyGhost	

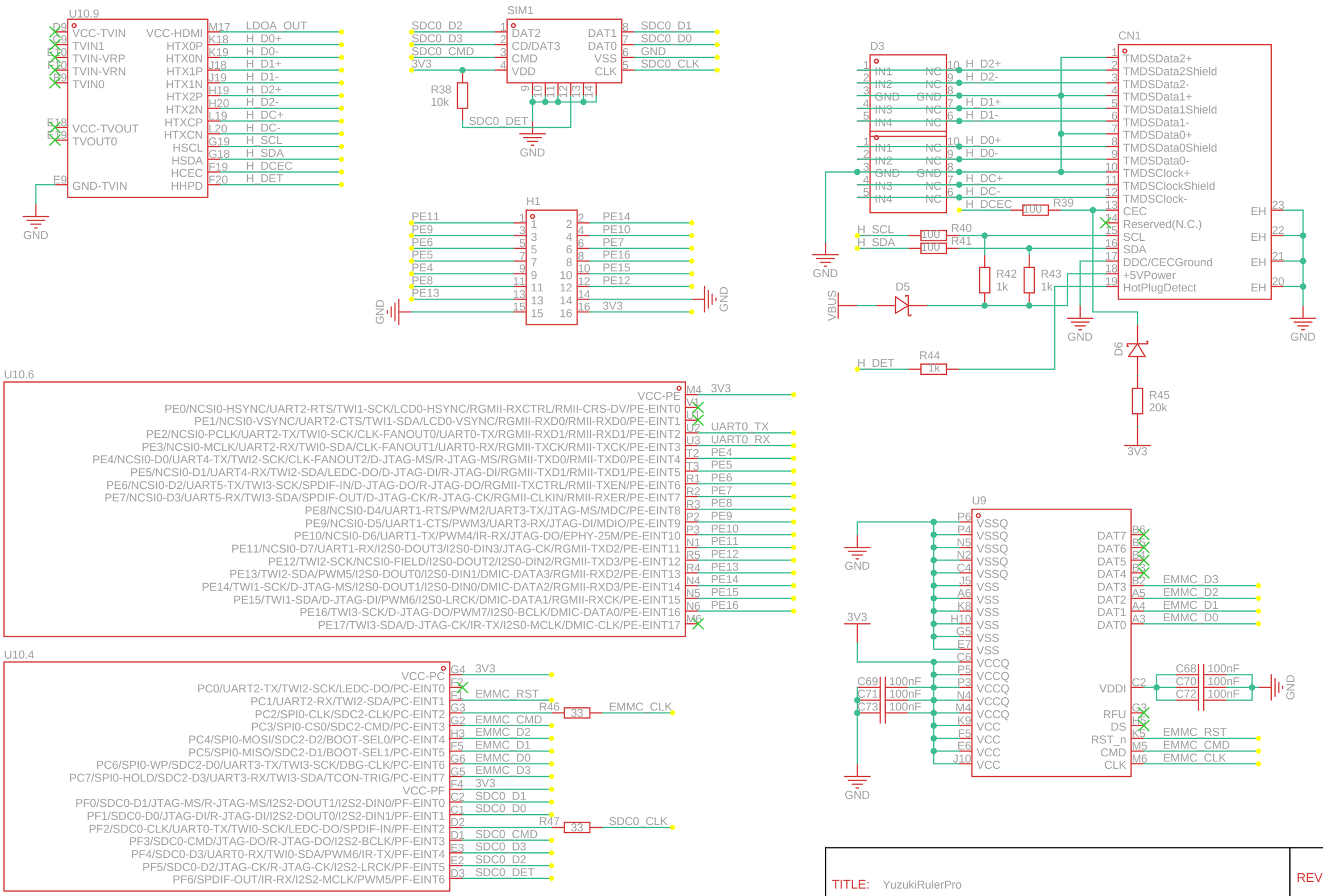

TITLE: YuzukiRulerPro		REV: 1.0
立创EDA	Company: YuzukiHD	Sheet: 1/1
	Date: 2021-09-08 Drawn By: GloomyGhost	