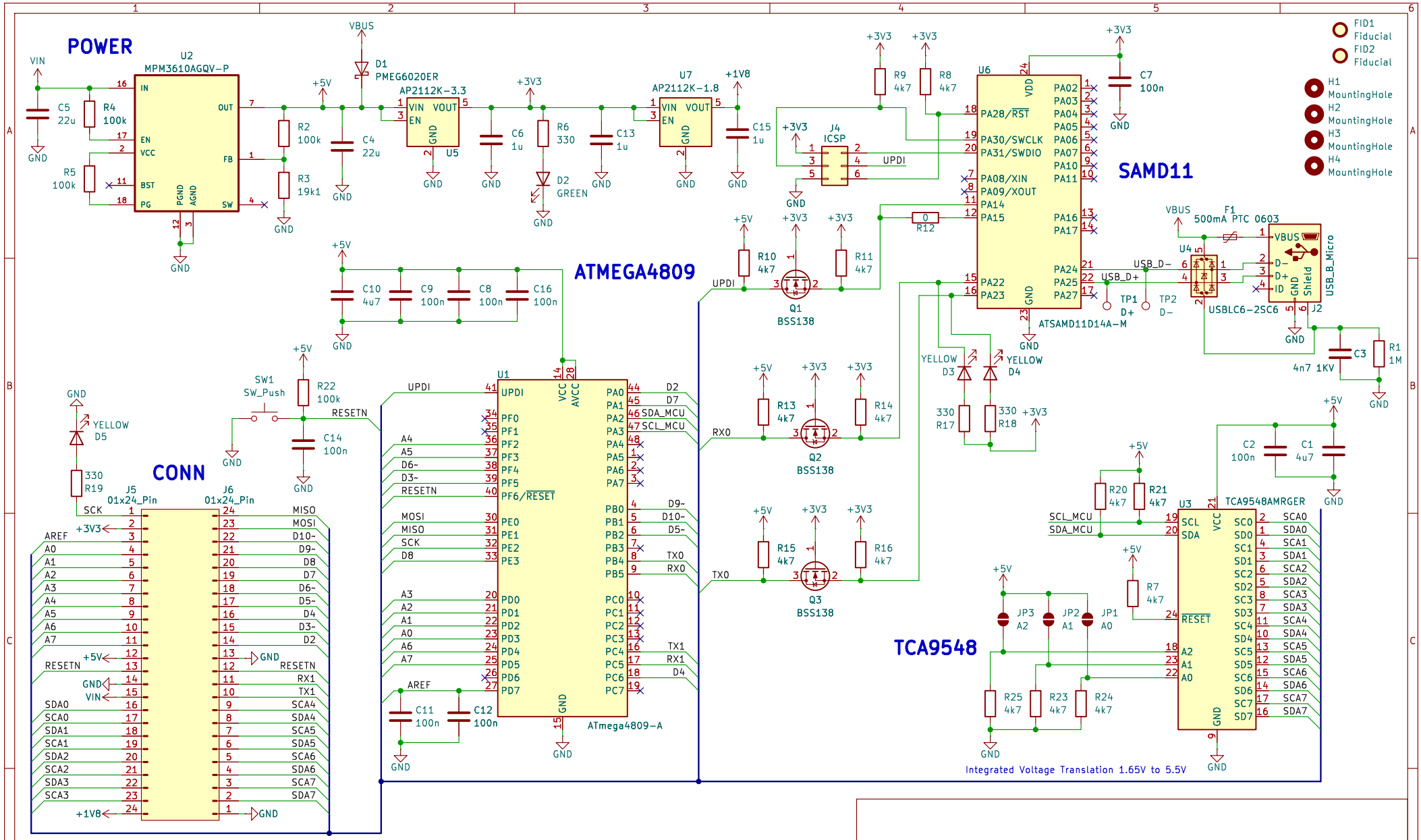

Arduino Nano Every based PCB with built in I2C multiplexer, compatible with 3.3 and 1.8v I2C peripherals
https://docs.arduino.cc/resources/schematics/ABX00028-schematics.pdf

Sheet: /
File: I2C_MUX_Board.kicad_sch

Title: MUX Test

Size: A4	Date: 2024-09-02	Rev: V1.0.0
KiCad E.D.A. 8.0.4		Id: 1/1