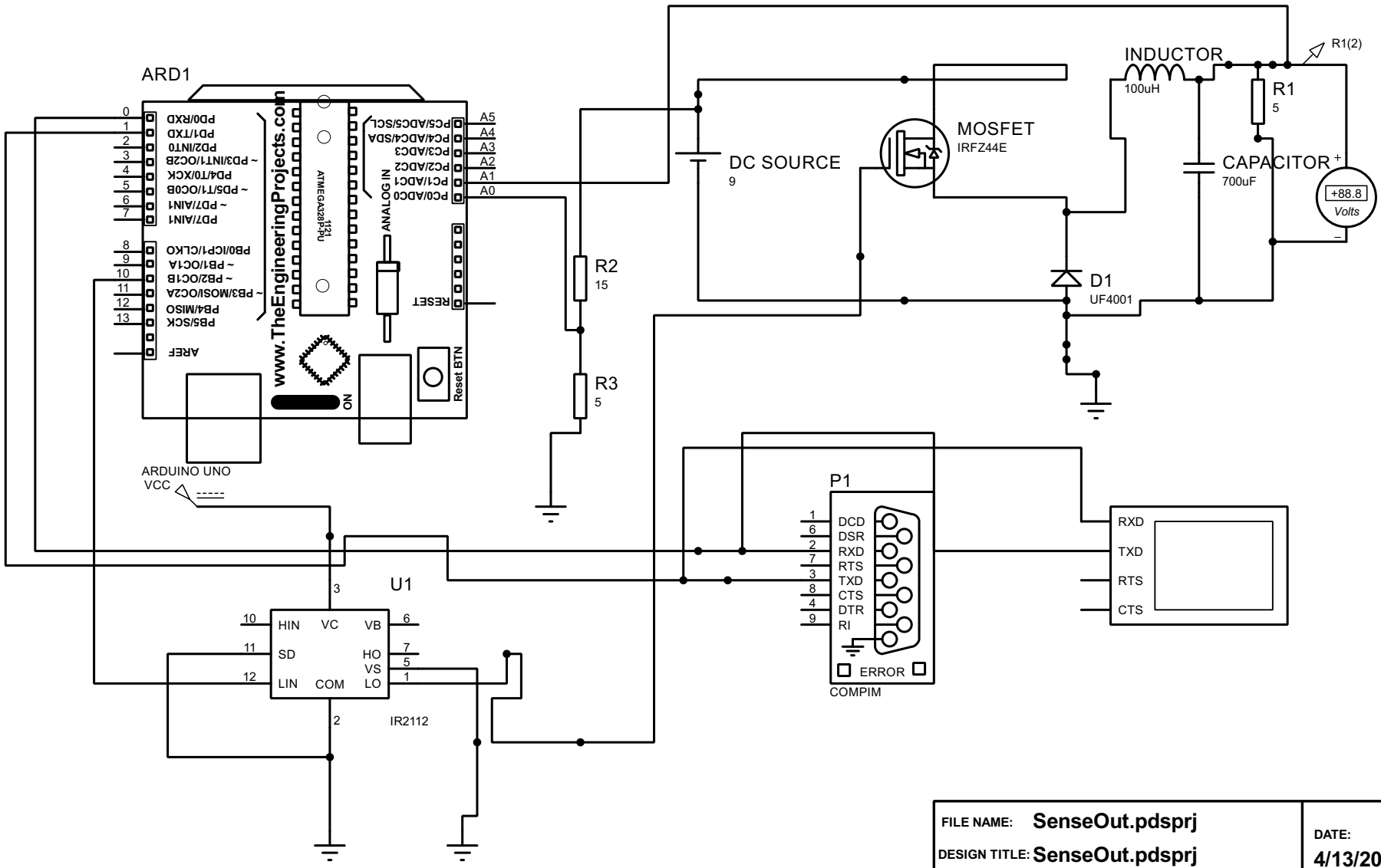
ARD1
PD0/RXD
PD1/TXD
PD2/INT0
~ PD3/INT1/OC2B
PD4/T0/XCK
~ PD5/T1/OC0B
~ PD7/AIN1
PD7/AIN1
PB0/ICP1/CLKO
~ PB1/OC1A
~ PB2/OC1B
~ PB3/MOSI/OC2A
PB4/MISO
PB5/SCK
AREF
ATMEGA328P-PU
1121
www.TheEngineeringProjects.com
ON
ANALOG IN
PC5/ADC5/SCL
PC4/ADC4/SDA
PC3/ADC3
PC2/ADC2
PC1/ADC1
PC0/ADC0
A5
A4
A3
A2
A1
A0
RESET
Reset BTN
ARDUINO UNO
VCC
R2
15
R3
5
DC SOURCE
9
MOSFET
IRFZ44E
INDUCTOR
100uH
R1(2)
R1
5
CAPACITOR
700uF
+88.8
Volts
D1
UF4001
P1
DCD
DSR
RXD
RTS
TXD
CTS
DTR
RI
ERROR
COMPIM
RXD
TXD
RTS
CTS
U1
HIN
VC
VB
SD
HO
VS
LIN
COM
LO
IR2112
FILE NAME: SenseOut.pdsprj
DESIGN TITLE: SenseOut.pdsprj
PATH: C:\Users\Lenovo\Documents\Design and Simulation of microcontr
BY: @AUTHOR
REV: @REV
BOARD: @BOARD
DATE: 4/13/2024
PAGE: 1 of 1
TIME: 6:39:24 PM