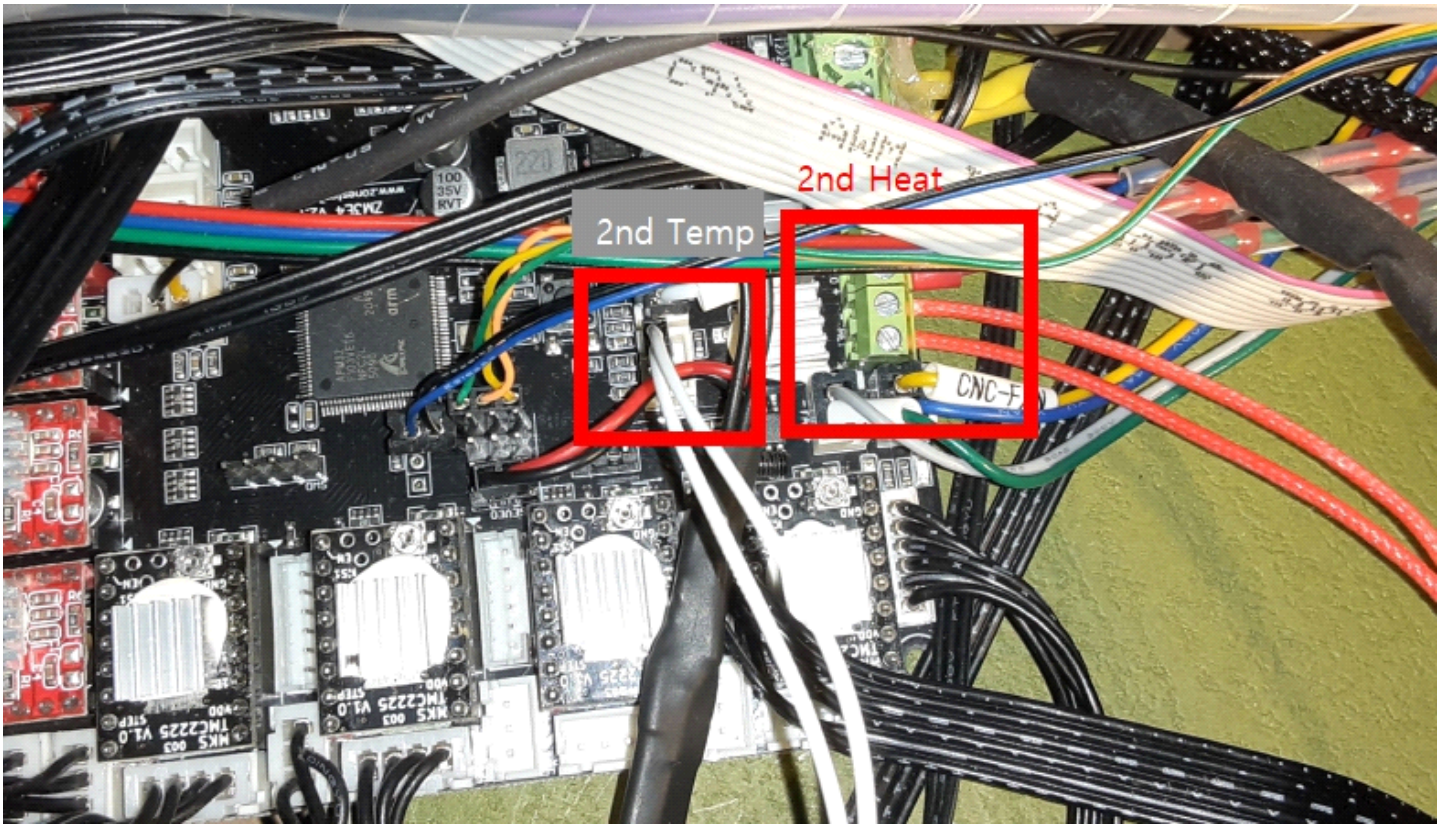
2nd Heat
2nd Temp

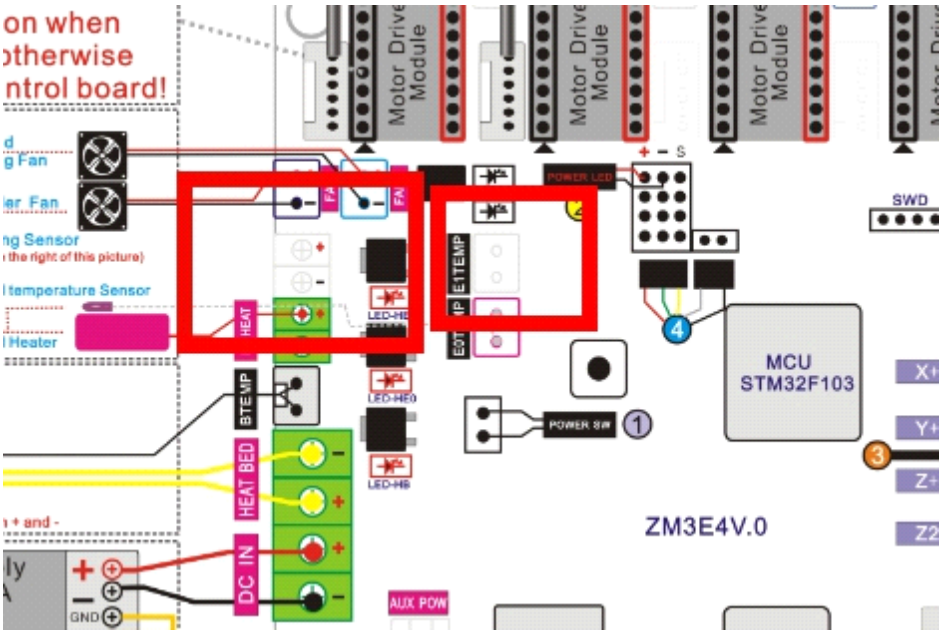
on when
otherwise
ntrol board!
Motor Drive Module
Motor Drive Module
Motor Drive Module
POWER LED
SWD
MCU
STM32F103
POWER SW
ZM3E4V.0
BTEMP
HEAT BED
DC IN
AUX POW
GND