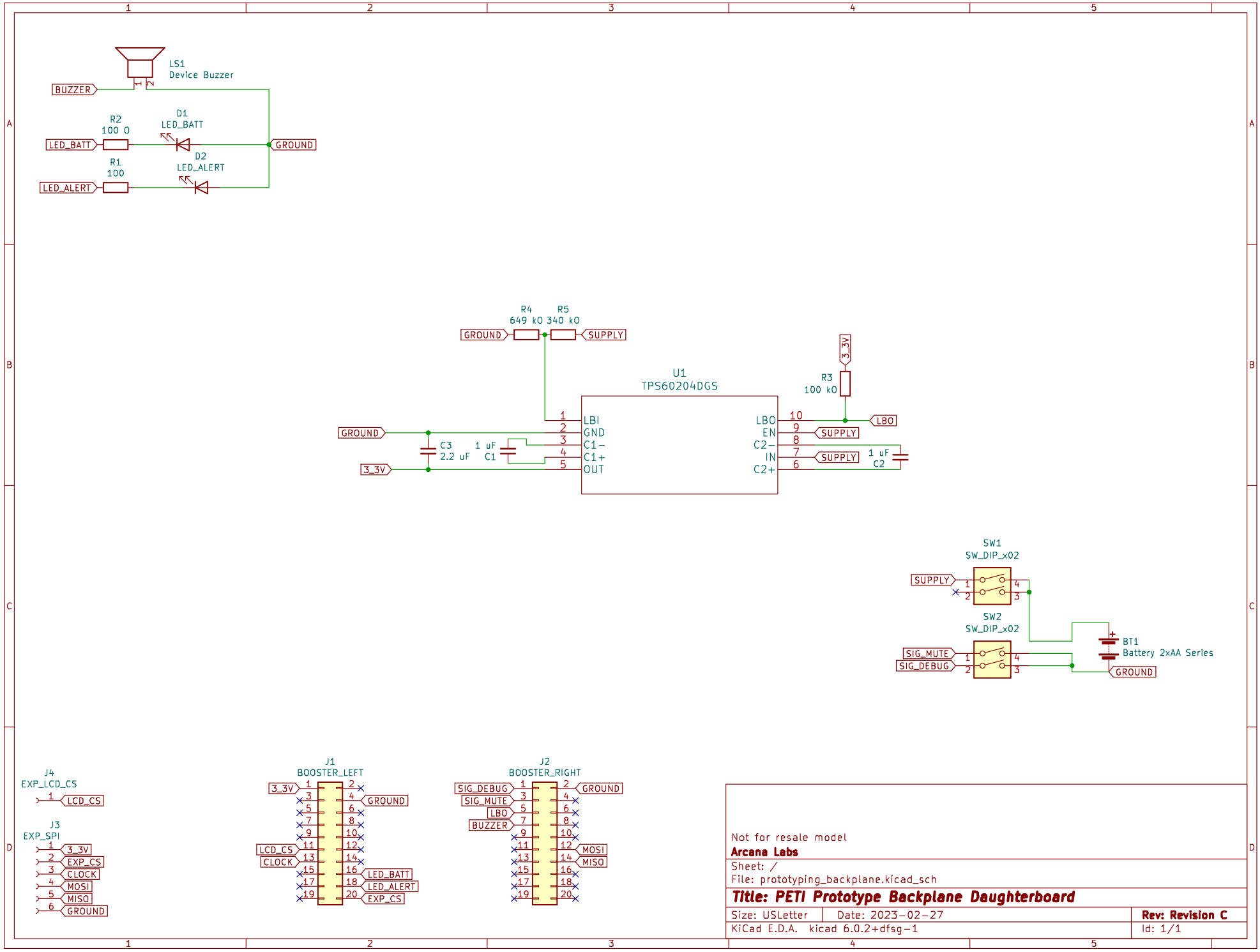
LS1
Device Buzzer
BUZZER
R2
100 Ω
D1
LED_BATT
LED_BATT
GROUND
R1
100
D2
LED_ALERT
LED_ALERT
R4
649 kΩ
R5
340 kΩ
GROUND
SUPPLY
U1
TPS60204DGS
R3
100 kΩ
3_3V
LBI
GND
C1−
C1+
OUT
LBO
EN
C2−
IN
C2+
LBO
SUPPLY
SUPPLY
GROUND
C3
2.2 uF
1 uF
C1
3_3V
1 uF
C2
SW1
SW_DIP_x02
SUPPLY
SW2
SW_DIP_x02
SIG_MUTE
SIG_DEBUG
BT1
Battery 2xAA Series
GROUND
J4
EXP_LCD_CS
LCD_CS
J3
EXP_SPI
3_3V
EXP_CS
CLOCK
MOSI
MISO
GROUND
J1
BOOSTER_LEFT
3_3V
GROUND
LCD_CS
CLOCK
LED_BATT
LED_ALERT
EXP_CS
J2
BOOSTER_RIGHT
SIG_DEBUG
SIG_MUTE
LBO
BUZZER
GROUND
MOSI
MISO
Not for resale model
Arcana Labs
Sheet: /
File: prototyping_backplane.kicad_sch
Title: PETI Prototype Backplane Daughterboard
Size: USLetter
Date: 2023-02-27
Rev: Revision C
KiCad E.D.A. kicad 6.0.2+dfsg-1
Id: 1/1