Generative large language models

CS 485, Spring 2026
Applications of Natural Language Processing

Katrin Erk
College of Information and Computer Sciences
University of Massachusetts Amherst

With slides by Brendan O'Connor, Material from Jurafsky& Martin

Generative & **L**arge **LM**s

- "Generative": can sample/choose textual output from the model
- "Large": billions of parameters, trillions of tokens of training data (web, books, etc.)

- Model: typically left-to-right Transformer

- Two different variants
  - 1. Pure language modeling
  - 2. + Instruction tuning: encourage useful responses

- Some aspects of them today
  - Decoding/sampling
  - Instruction tuning, fine tuning
- Open-weight API: https://api.together.xyz/playground/
    - Or use Huggingface

Generative & **L**arge **LM**s

- Language models: Models that are able to **predict** $P(w_n \mid w_1, \ldots w_{n-1})$ can iteratively **generate** text
- The importance of pretraining:
  Pretraining as "massively multi-task" learning

Transformer variants

Transformer variants

- Decoder only
  - Input: sequence of words
  - Output: Iteratively generates one output word at a time
- Current large language models: GPT, Claude, LLama, Mistral, …
- **Autoregressive or causal LLMs**

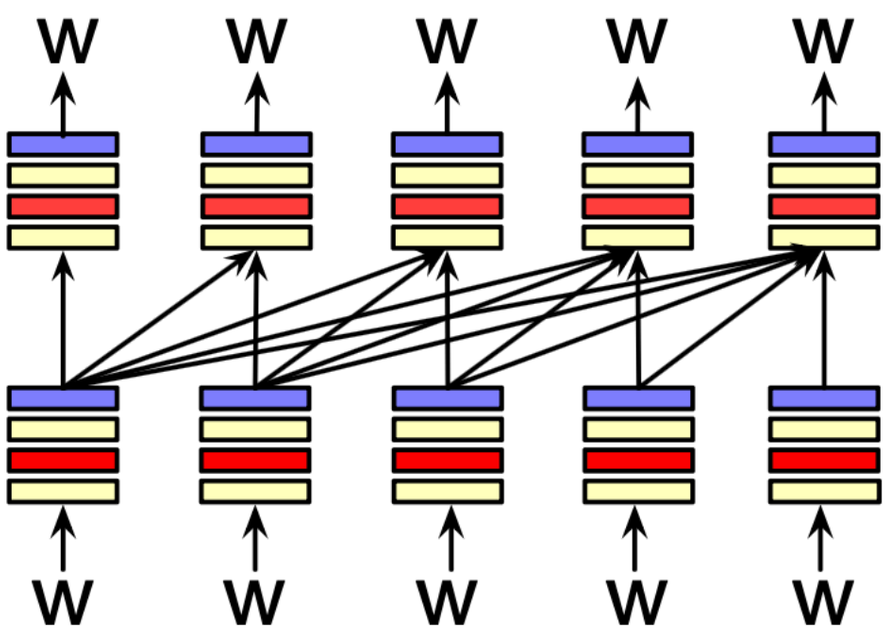

Decoder

Transformer variants

- Encoder only
  - Input: Sequence of tokens
  - Output: Vector representation for each token
- Usually Masked Language Models
- Example: BERT
- Don’t generate text

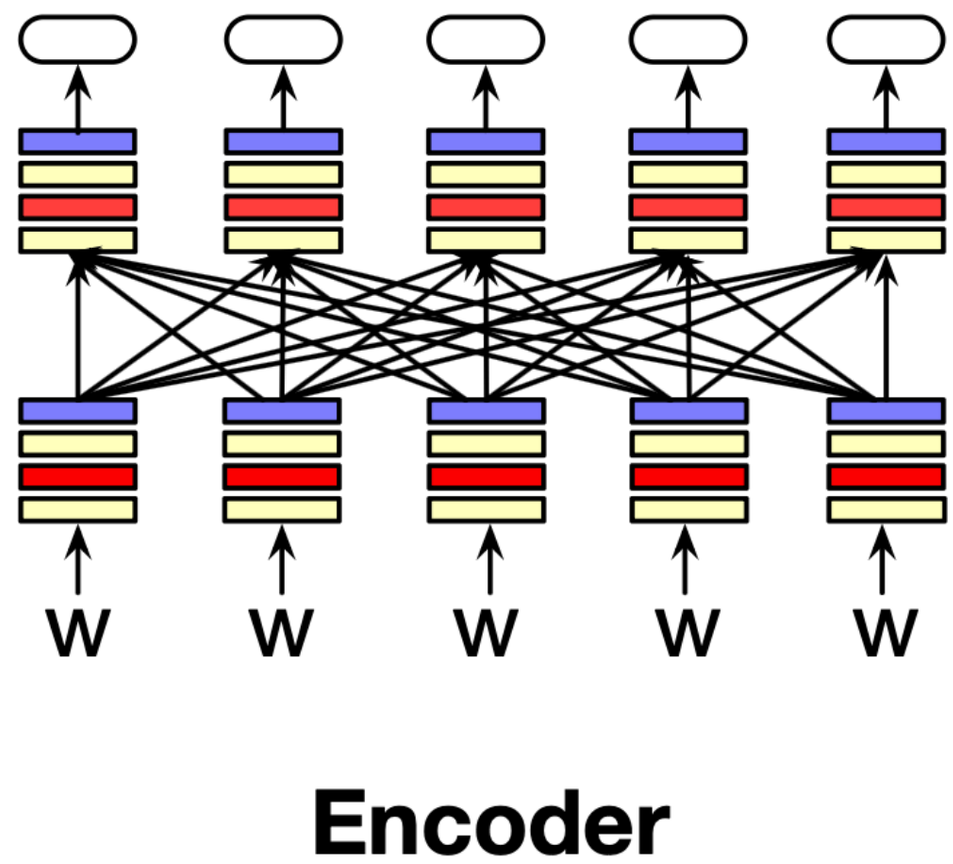

Transformer variants

- Encoder-Decoder
  - Input: Sequence of tokens
  - Output: series of tokens
- Looser relationship between input and output tokens
  - Can map between different kinds of tokens.
- Example: machine translation

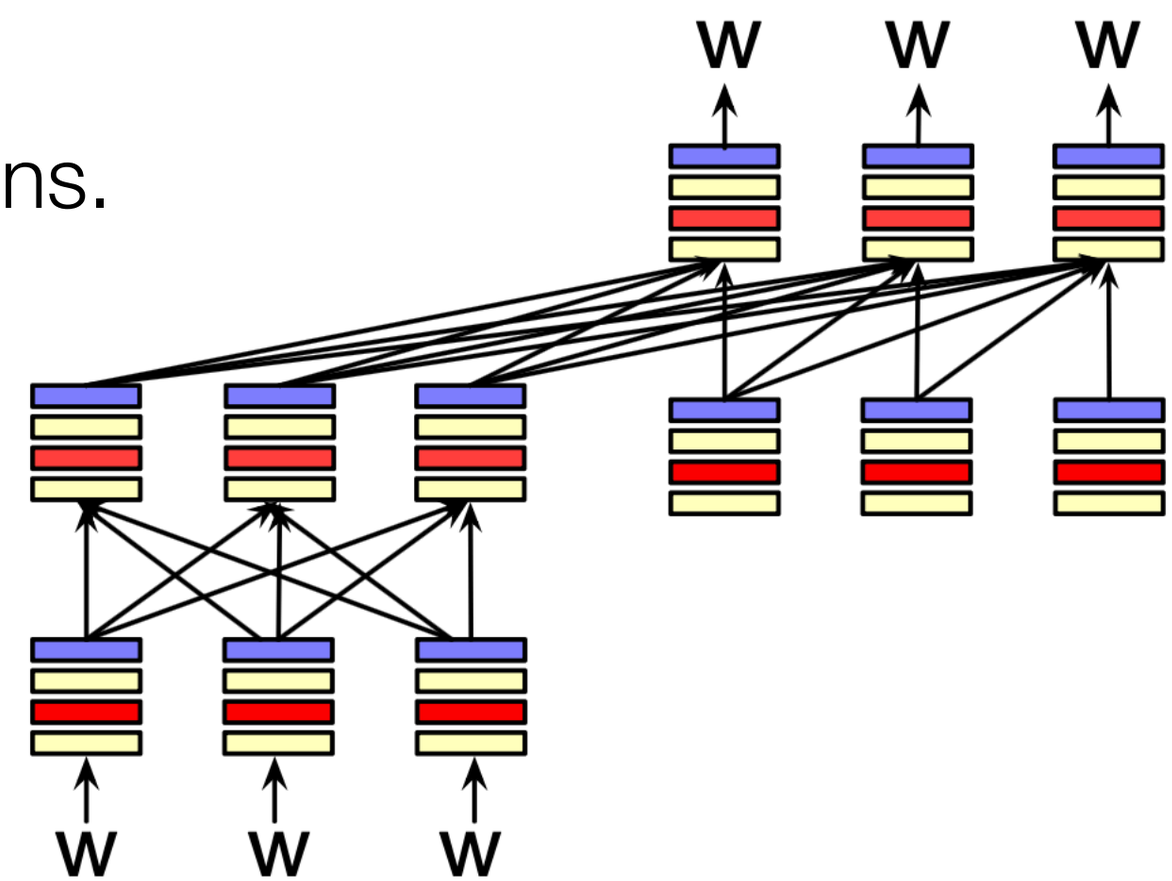

Training data

Left-to-right LM training (next word prediction) as "massively multi-task" learning

Prefix {choice_1, choice_2}	**Task**
In my free time, I like to {run, banana}	Grammar
I went to the zoo to see giraffes, lions, and {zebras, spoon}	Lexical semantics
The capital of Denmark is {Copenhagen, London}	World knowledge
I was laughing the entire time, the movie was {good, bad}	Sentiment analysis
The word for “pretty” in Spanish is {bonita, hola}	Translation
First grade arithmetic exam: 3 + 8 + 4 = {15, 11}	Math question

[from Jason Wei, Nov 2023]

Left-to-right LM training (next word prediction) as "massively multi-task" learning

Prefix	Next word [task]
A transformer is a deep learning architecture, initially proposed in	2017 [factual recall]
A transformer is a deep learning architecture, initially proposed in 2017	, [comma prediction]
A transformer is a deep learning architecture, initially proposed in 2017,	that [grammar]
A transformer is a deep learning architecture, initially proposed in 2017, that	relies [impossible task?]

[from Jason Wei, Nov 2023]

”I’m not the cleverest man in the world, but like they say in French: **Je ne suis pas un imbecile [I’m not a fool].**

In a now-deleted post from Aug. 16, Soheil Eid, Tory candidate in the riding of Joliette, wrote in French: ”**Mentez mentez, il en restera toujours quelque chose**,” which translates as, ”**Lie lie and something will always remain.**”

“I hate the word ‘**perfume**,’” Burr says. ‘It’s somewhat better in French: ‘**parfum**.’

If listened carefully at 29:55, a conversation can be heard between two guys in French: “**-Comment on fait pour aller de l’autre coté? -Quel autre coté?**”, which means “**- How do you get to the other side? - What side?**”.

If this sounds like a bit of a stretch, consider this question in French: **As-tu aller au cinéma?**, or **Did you go to the movies?**, which literally translates as Have-you to go to movies/theater?

“**Brevet Sans Garantie Du Gouvernement**”, translated to English: “**Patented without government warranty**”.

Examples of naturally occurring English to French and French to English translation found in the WebText training set

[GPT-2 paper (2018)]

Training

Pretraining

- Today: What does pertaining data look like?
- Next time: Different forms of training

The Pile corpus

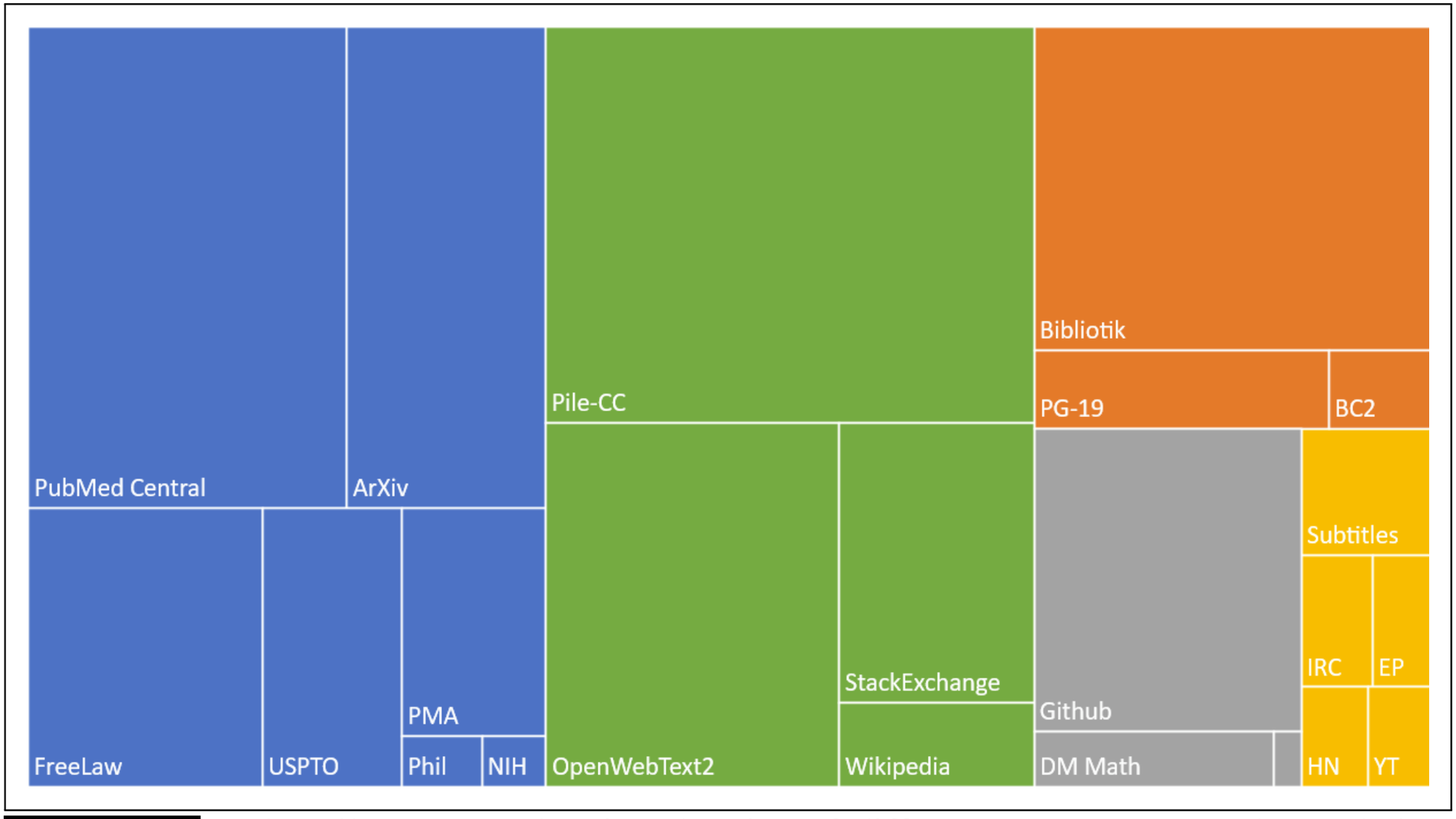

Figure 10.5 The Pile corpus, showing the size of different components, color coded as academic (articles from PubMed and ArXiv, patents from the USPTA; internet (webtext including a subset of the common crawl as well as Wikipedia), prose (a large corpus of books), dialogue (including movie subtitles and chat data), and misc.. Figure from Gao et al. (2020).

The Pile corpus

- The Pile corpus: 825 GB English text corpus containing publicly released code, text scraped from the web, books and Wikipedia;
- Data collection is very uncontrolled
- Filtering for quality and safety
  - Quality: Some quality filters are machine learning models trained e.g. on Wikipedia as paragon of quality. Avoid personal identifiable information, adult content
  - Safety: often includes toxicity detection with off-the-shelf tools
    - Known to often mistakenly flag non-toxic data generated from minority speakers (more on toxicity detection below)
- Many unknowns still in the training data: too large to easily analyze and search

Generation

$p(w_{N+1} \mid w_1..w_N) =$

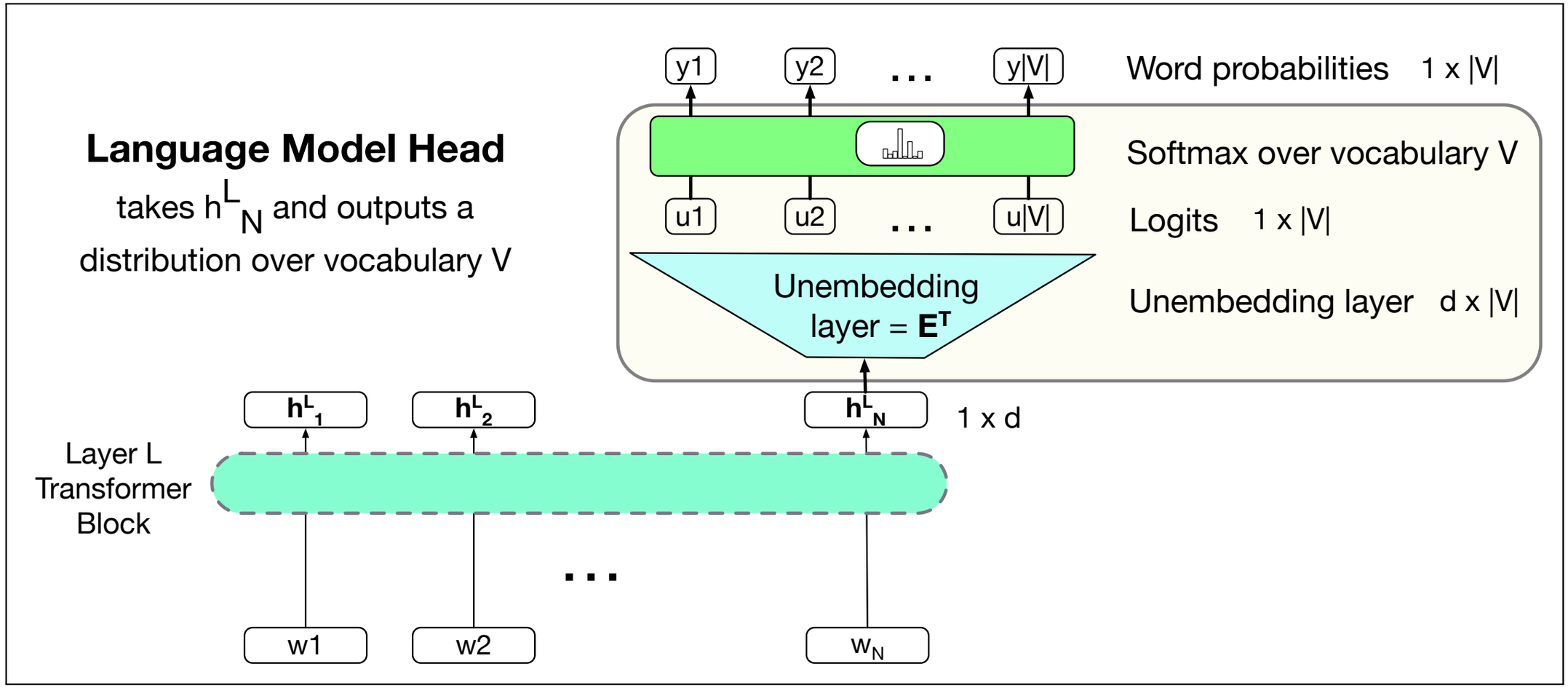

Figure 10.13 The language modeling head: the circuit at the top of a transformer that maps from the output embedding for token N from the last transformer layer ($\mathbf{h}^L_N$) to a probability distribution over words in the vocabulary V.

- Left-to-right, a.k.a. causal model
- attend only to left a.k.a. "masked attention" a.k.a."decoder-only"

[*SLP3 reading*]

Context window

- Self-attention isn't practical to run on an entire document
  - Why?
- Context window limits
  - GPT-2 (2018): 512-1024 tokens
    - similarly BERT, RoBERTA (2018-2019)
  - Llama 3 (2024): 8192 tokens
  - rising fast...
- Current research: Are long-range contexts used *well*? How to improve?

Selecting a single output string

- Language Modeling Head produces $p(w_{N+1} \mid w_1, \ldots w_N)$: Not a single next word, but probabilities for how likely any vocab item is to be the next word
- How do we turn this into a single output string?
- Methods:
  - Greedy decoding
  - Random sampling
  - Beam search (heuristic optimization)
  - Temperature-based sampling

Selecting a single output string

- Greedy decoding: Always select the single most likely output word
- Turns out not to work so well. Any idea why?

Selecting a single output string

- Greedy decoding: Always select the single most likely output word
  - Tends to be repetitive
- Random sampling: Sample the next output word based on probabilities

  $p(w_{N+1} \mid w_1, \ldots w_N)$
  - Tends to give too much probability mass to rare events: even though each individual word is rare, there are lots of rare words
- Temperature sampling: …

Selecting a single output string

- Temperature sampling:
  - Standard softmax: $\mathbf{y} = softmax(\mathbf{u})$
  - With temperature: $\mathbf{y} = softmax(\mathbf{u}/\tau)$
- What does this do?

Selecting a single output string

- Temperature sampling:
  - Standard softmax: $\mathbf{y} = softmax(\mathbf{u})$
  - With temperature: $\mathbf{y} = softmax(\mathbf{u}/\tau)$
- What does this do?
- $\tau = 1$: normal softmax
- Lower τ means more greedy distribution:
  - $\tau \leq 1$: dividing by τ ≤1 makes each score larger
  - Larger inputs -> more focus on highest inputs because of exp(…) in softmax
  - Result: increased probabilities of high-probability tokens

Adaptation to tasks

Multitask learning, explicit datasets:
Just train the LM for *all* tasks
p(desired answer | input text)

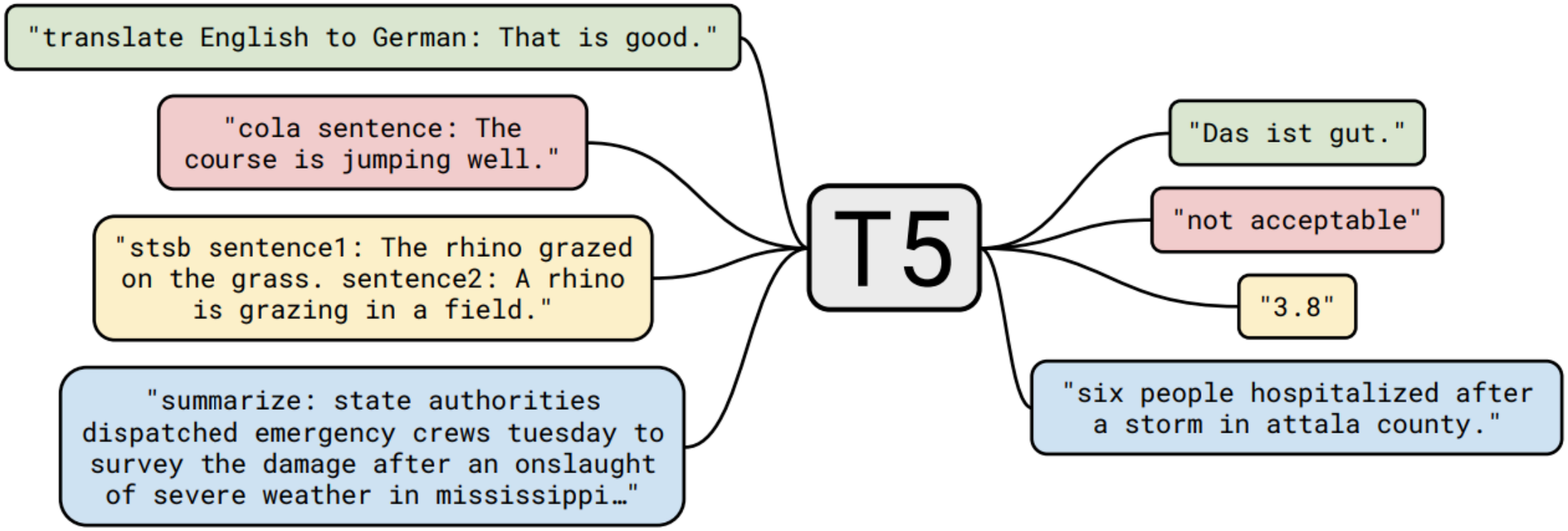

Figure 1: A diagram of our text-to-text framework. Every task we consider—including translation, question answering, and classification—is cast as feeding our model text as input and training it to generate some target text. This allows us to use the same model, loss function, hyperparameters, etc. across our diverse set of tasks. It also provides a standard testbed for the methods included in our empirical survey. "T5" refers to our model, which we dub the "**T**ext-**t**o-**T**ext **T**ransfer **T**ransformer".

- T5 is a "encoder-decoder" model
- Fine-tuned T5 is popular for supervised tasks

[Raffel et al. 2020]

Fine-tuning

- Use pertained language models
- Continue training on a task to adapt the model to the task
- Problem: Large number of parameters makes fine-tuning expensive
- LoRA: Low-rank adaptation

LoRA

- Low-rank adaptation: ICLR 2022
- Freeze pre-trained parameters
- Add smaller matrix of parameters to be combined with frozen pre-trained parameters
  - added into each layer of the Transformer
- Why would this work?
  - Prior work indicated that over-parametrized models in fact live on a low intrinsic dimension.
  - Hypothesis: change in weights during model adaptation also has a low “intrinsic rank”

LoRA

- Picture from the paper: Combine pre-trained weights, a matrix W of dimensions d times d, with newly trained matrices:
  - A, dimensionality d times r, and
  - B, dimensionality r times d, with r much smaller than d
    (not sure what the zero in the picture refers to)

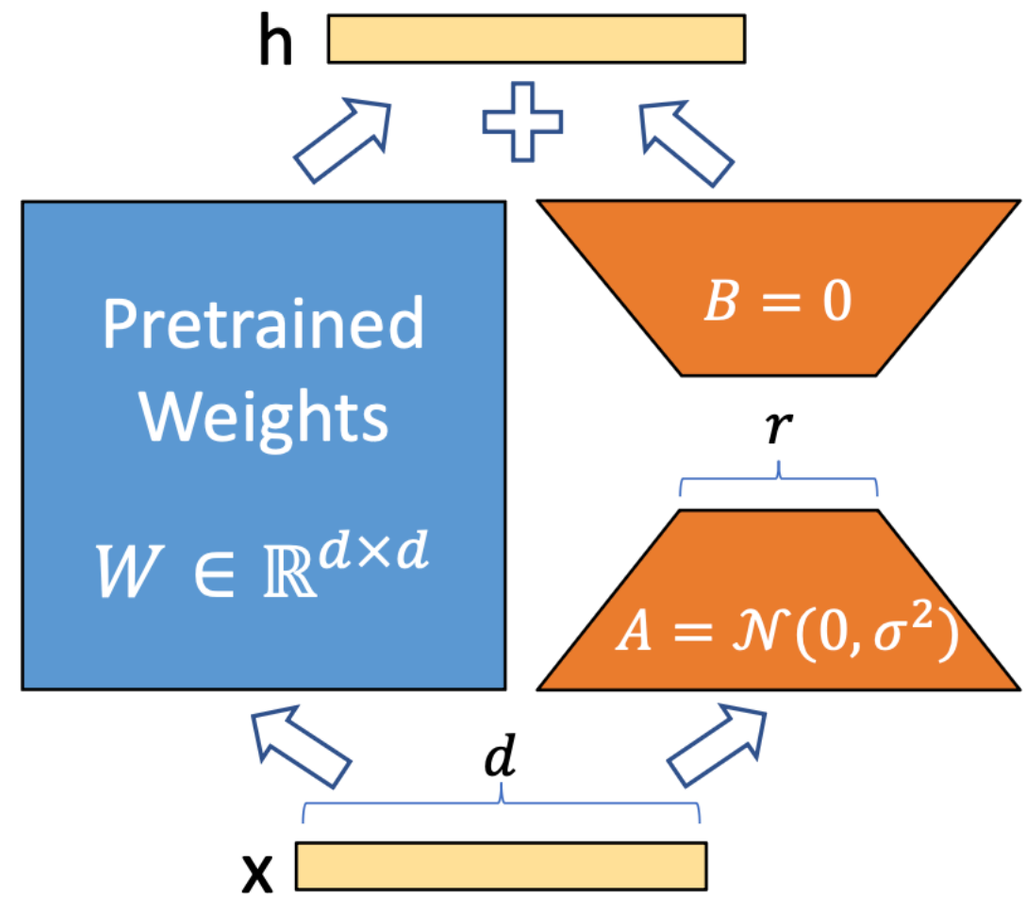

Figure 1: Our reparametrization. We only train A and B.

Evaluation

Evaluating LLMs

- What evaluations do you know?

Evaluating LLMs

- Perplexity
- Standard benchmarks
  - Task-specific
  - Standard evaluations across multiple tasks: Leaderboards
- The issue of data contamination
- Increasingly, LLM-generated data for evaluation, and LLM as judge
- What, other than task performance, to look at?

Evaluating LLMs

- Factors other than task performance:
  - Hallucination
    - Counteracting: Retrieval-augmented generation — we'll get to that
  - Energy use

A closer look at training/evaluation data: Toxicity detection

- Chronis 2026
- How is the task defined? What should count as toxic?
  - Whatever makes a participant want to leave a conversation
- Analysis of one “detoxification” dataset — caveat: not one of the large datasets
  - Focus on content, conveying information, facts, arguments
  - What gets lost? Wordplay, emotion, expression of oneself and one’s style.
    - Admittedly, sometimes wordplay in service of expressing disdain
    - But could that have to do with why minority language gets flagged more often?

Detoxification examples

- Removing wordplay
  - *Dims have gotten to be the nastiest trash in our nation.*
  - *Suck it up, trumplstiltskin.*
- Removing idioms (?)
  - *Takes a racist to know one right ->*
    Takes racist actions to know racist actions
    Original: takes one to know one — often an ad hominem attack, assumption about what the other person is (not just what they do)
    Detoxification: loses the idiom, also the ascription of “racist” (but is somewhat nonsensical)
- Removing expression of style
  - *>tRy AgAiN Typical condescending partisan ->*
    Stop being so condescending and such a partisan
    Alternating cap and not: indicates mocking tone in some online communities. Removes mocking, but also expression that shows the writer belongs to those communities

Where does the data come from

- Before 2018, toxicity detection was not a task. In 2024, papers in the thousands.
  What happened?
- Origins of toxicity detection: Problem with negative comments in player chats in League of Legends
- 2017: Google Jigsaw sponsors a Kaggle competition on toxicity detection, and provides a massive dataset
  - Release of additional datasets
  - Release of Perspective API for toxicity detection. Also used to filter LLM training data and for LLM instruction tuning
- Establishment of tasks and research topics often follows the data
- But is it the right data?