Symmetric-Key Encryption

CS 466: Applied Cryptography

Adam O'Neill

Setting the Stage

- We have studied our first lower-level primitive, blockciphers.
- Today we will study how to use it to build our first higher-level primitive, symmetric-key encryption.

Syntax

A symmetric encryption scheme $\mathcal{SE} = (\mathcal{K}, \mathcal{E}, \mathcal{D})$ consists of three algorithms:

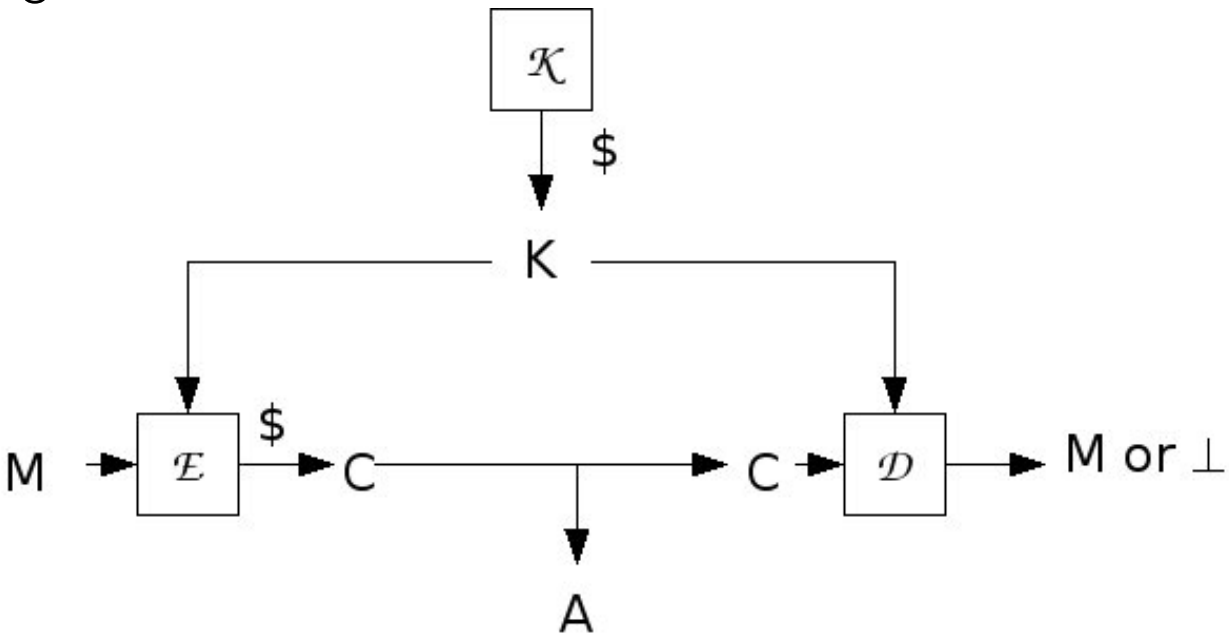

$\mathcal{K}$ and $\mathcal{E}$ may be randomized, but $\mathcal{D}$ must be deterministic.

Correctness

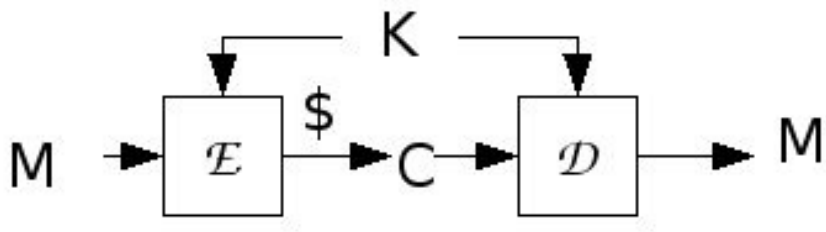

More formally: For all keys K that may be output by $\mathcal{K}$, and for all M in the *message space*, we have

$$Pr[\mathcal{D}_K(\mathcal{E}_K(M)) = M] = 1 \ ,$$

where the probability is over the coins of $\mathcal{E}$.

A scheme will usually specify an associated message space.

Blockcipher Modes of Operation

$E : \{0,1\}^k \times \{0,1\}^n \to \{0,1\}^n$ a block cipher

Notation: $x[i]$ is the i-th n-bit block of a string x, so that $x = x[1] \ldots x[m]$ if $|x| = nm$.

Always:

Alg $\mathcal{K}$
$K \xleftarrow{\$} \{0,1\}^k$
return K

Modes of operation

Block cipher provides parties sharing K with

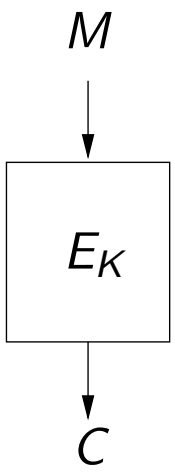

which enables them to encrypt a 1-block message.

How do we encrypt a long message using a primitive that only applies to n-bit blocks?

Electronic Codebook Mode

$\mathcal{SE} = (\mathcal{K}, \mathcal{E}, \mathcal{D})$ where:

Alg $\mathcal{E}_K(M)$	**Alg** $\mathcal{D}_K(C)$
for $i = 1, \ldots, m$ do	for $i = 1, \ldots, m$ do
$\quad C[i] \leftarrow E_K(M[i])$	$\quad M[i] \leftarrow E_K^{-1}(C[i])$
return C	return M

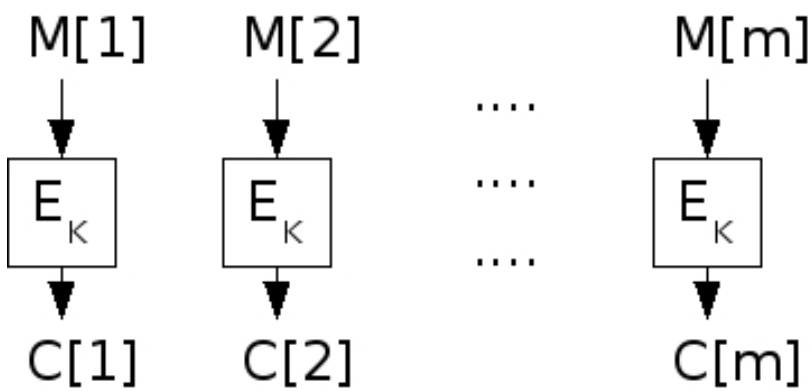

Weakness of ECB

Weakness: $M_1 = M_2 \Rightarrow C_1 = C_2$

Why is the above true? Because E_K is deterministic:

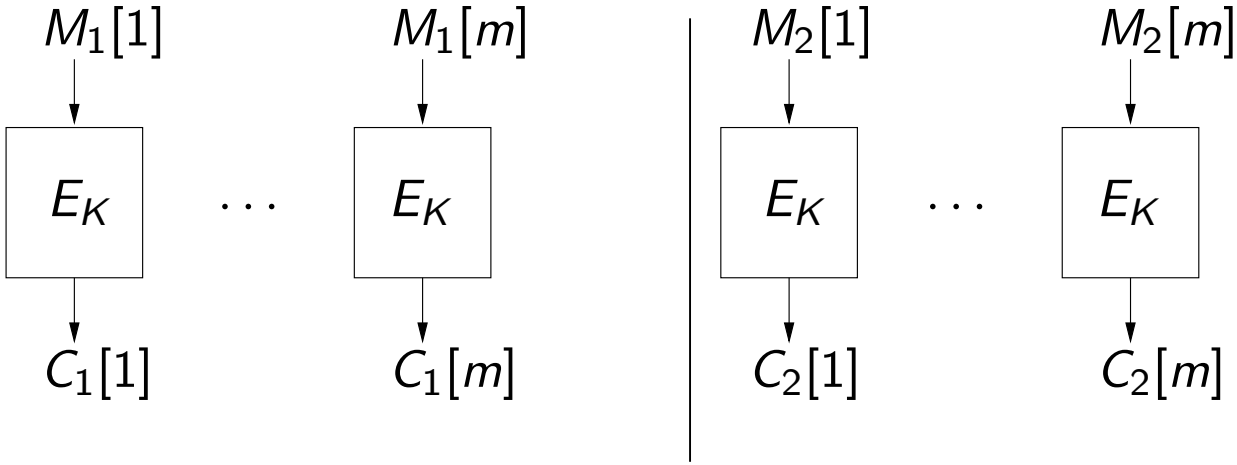

Why does this matter?

Weakness of ECB

Suppose we know that there are only two possible messages, $Y = 1^n$ and $N = 0^n$, for example representing

- FIRE or DON'T FIRE a missile
- BUY or SELL a stock
- Vote YES or NO

Then ECB algorithm will be $\mathcal{E}_K(M) = E_K(M)$.

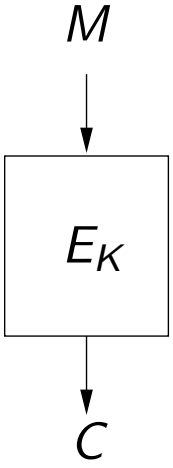

Is this avoidable?

Let $\mathcal{SE} = (\mathcal{K}, \mathcal{E}, \mathcal{D})$ be ANY encryption scheme.

Suppose $M_1, M_2 \in \{Y, N\}$ and

- Sender sends ciphertexts $C_1 \leftarrow \mathcal{E}_K(M_1)$ and $C_2 \leftarrow \mathcal{E}_K(M_2)$
- Adversary A knows that $M_1 = Y$

Adversary says: If $C_2 = C_1$ then M_2 must be Y else it must be N.

Does this attack work?

Introducing Randomized Encryption

For encryption to be secure it must be randomized

That is, algorithm $\mathcal{E}_K$ flips coins.

If the same message is encrypted twice, we are likely to get back different answers. That is, if $M_1 = M_2$ and we let

$$C_1 \xleftarrow{\$} \mathcal{E}_K(M_1) \text{ and } C_2 \xleftarrow{\$} \mathcal{E}_K(M_2)$$

then

$$Pr[C_1 = C_2]$$

will (should) be small, where the probability is over the coins of $\mathcal{E}$.

Randomized Encryption

There are many possible ciphertexts corresponding to each message.

If so, how can we decrypt?

We will see examples soon.

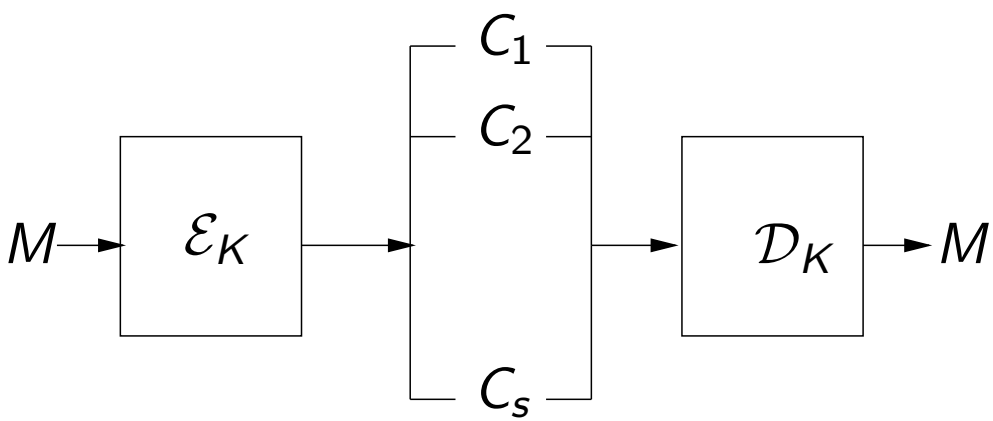

Randomized Encryption

A fundamental departure from classical and conventional notions of encryption.

Clasically, encryption (e.g., substitution cipher) is a code, associating to each message a unique ciphertext.

Now, we are saying no such code is secure, and we look to encryption mechanisms which associate to each message a number of different possible ciphertexts.

CBC-$:
Cipher-block Chaining Mode with Random IV

$\mathcal{SE} = (\mathcal{K}, \mathcal{E}, \mathcal{D})$ where:

Alg $\mathcal{E}_K(M)$

$C[0] \xleftarrow{\$} \{0,1\}^n$
for $i = 1, \ldots, m$ do
    $C[i] \leftarrow E_K(M[i] \oplus C[i-1])$
return C

Alg $\mathcal{D}_K(C)$

for $i = 1, \ldots, m$ do
    $M[i] \leftarrow E_K^{-1}(C[i]) \oplus C[i-1]$
return M

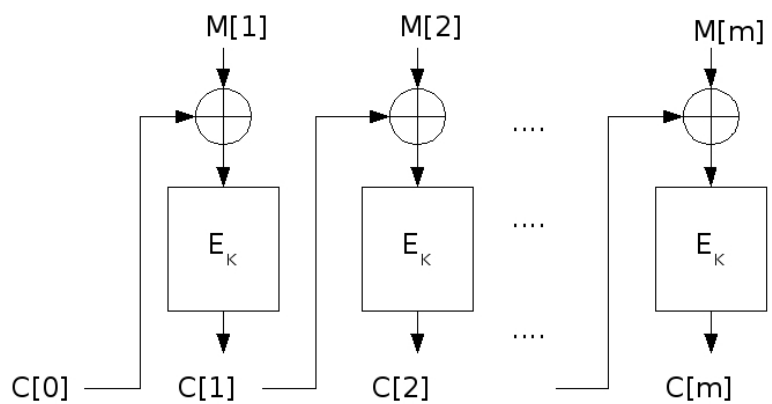

Correct decryption relies on E being a block cipher.

CTR-$ Mode

Let $E\colon \{0,1\}^k \times \{0,1\}^n \to \{0,1\}^\ell$ be a family of functions. If $X \in \{0,1\}^n$ and $i \in \mathbf{N}$ then $X + i$ denotes the n-bit string formed by converting X to an integer, adding i modulo 2^n, and converting the result back to an n-bit string. Below the message is a sequence of ℓ-bit blocks:

Alg $\mathcal{E}_K(M)$

$C[0] \xleftarrow{\$} \{0,1\}^n$
for $i = 1, \ldots, m$ do
  $P[i] \leftarrow E_K(C[0] + i)$
  $C[i] \leftarrow P[i] \oplus M[i]$
return C

Alg $\mathcal{D}_K(C)$

for $i = 1, \ldots, m$ do
  $P[i] \leftarrow E_K(C[0] + i)$
  $M[i] \leftarrow P[i] \oplus C[i]$
return M

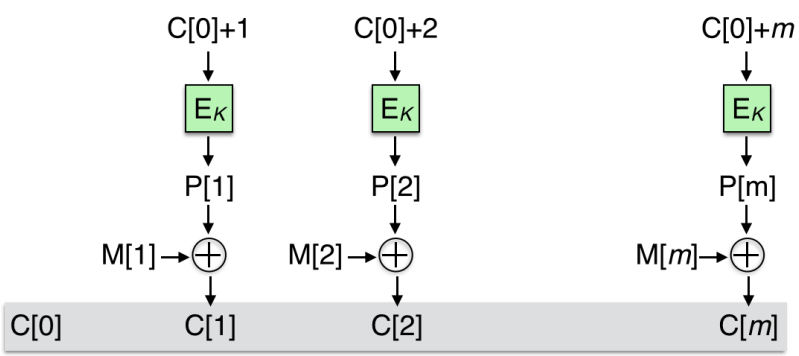

CTR-$ Mode

Alg $\mathcal{E}_K(M)$

$C[0] \xleftarrow{\$} \{0,1\}^n$
for $i = 1, \ldots, m$ do
  $P[i] \leftarrow E_K(C[0] + i)$
  $C[i] \leftarrow P[i] \oplus M[i]$
return C

Alg $\mathcal{D}_K(C)$

for $i = 1, \ldots, m$ do
  $P[i] \leftarrow E_K(C[0] + i)$
  $M[i] \leftarrow P[i] \oplus C[i]$
return M

- $\mathcal{D}$ does not use E_K^{-1}! This is why CTR$ can use a family of functions E that is not required to be a blockcipher.
- Encryption and Decryption are parallelizable.

Voting with CBC-$

Suppose we encrypt $M_1, M_2 \in \{Y, N\}$ with CBC$.

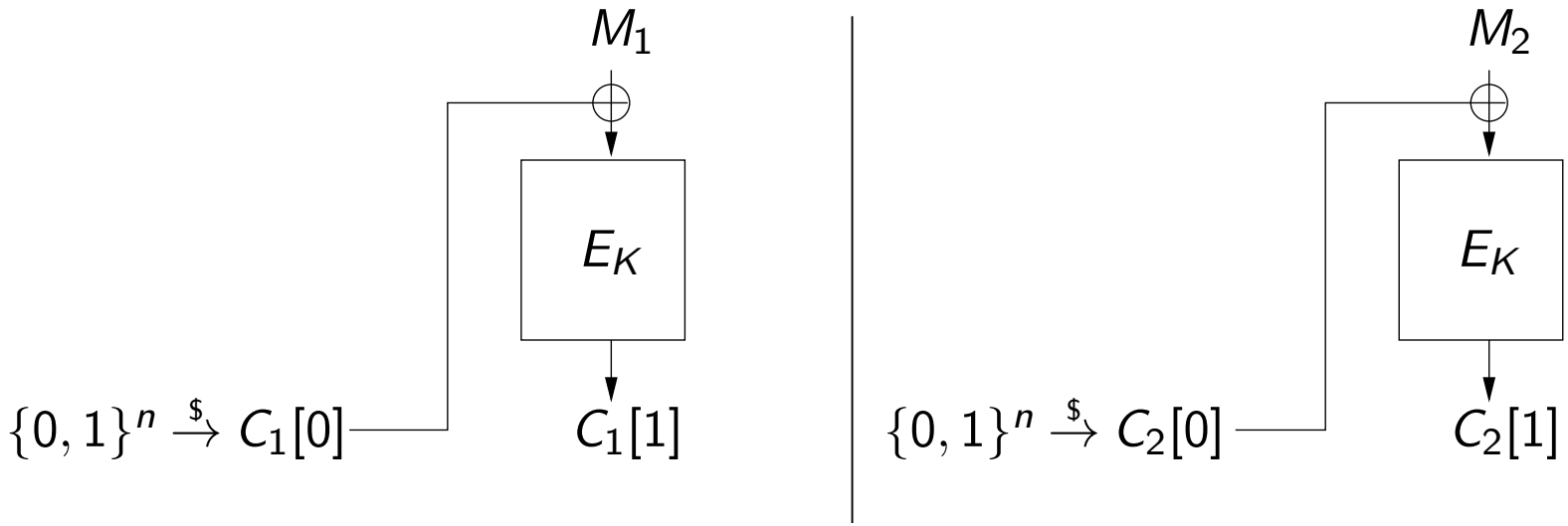

Adversary A sees $C_1 = C_1[0]C_1[1]$ and $C_2 = C_2[0]C_2[1]$.

Suppose A knows that $M_1 = Y$.

Can A determine whether $M_2 = Y$ or $M_2 = N$?

Assessing Security

- How to determine which modes of operations are "good" ones?
- E.g., CBC-$ seems better than ECB. But is it secure? Or are there still attacks?
- Important since CBC-$ is widely used.

Security requirements

Suppose sender computes

$$C_1 \xleftarrow{\$} \mathcal{E}_K(M_1)\,;\ \cdots\ ;\ C_q \xleftarrow{\$} \mathcal{E}_K(M_q)$$

Adversary A has $C_1, \ldots, C_q$

What if A	
Retrieves K	Bad!
Retrieves M_1	Bad!

But also we want to hide all partial information about the data stream, such as

- Does $M_1 = M_2$?
- What is first bit of M_1?
- What is XOR of first bits of M_1, M_2?

Something we won't hide: the length of the message

Intuition

The master property MP is called IND-CPA (indistinguishability under chosen plaintext attack).

Consider encrypting one of two possible message streams, either

$$M_0^1, ..., M_0^q$$

or

$$M_1^1, ..., M_1^q \ ,$$

where $|M_0^i| = |M_1^i|$ for all $1 \leq i \leq q$. Adversary, given ciphertexts $C^1, \ldots,$ C^q and both data streams, has to figure out which of the two streams was encrypted.

We will even let the adversary pick the messages: It picks (M_0^1, M_1^1) and gets back C^1, then picks (M_0^2, M_1^2) and gets back C^2, and so on.

IND-CPA

Let $\mathcal{SE} = (\mathcal{K}, \mathcal{E}, \mathcal{D})$ be an encryption scheme

Game $\mathrm{Left}_{\mathcal{SE}}$	Game $\mathrm{Right}_{\mathcal{SE}}$
procedure Initialize	**procedure Initialize**
$K \xleftarrow{\$} \mathcal{K}$	$K \xleftarrow{\$} \mathcal{K}$
procedure LR(M_0, M_1)	**procedure LR**(M_0, M_1)
Return $C \xleftarrow{\$} \mathcal{E}_K(M_0)$	Return $C \xleftarrow{\$} \mathcal{E}_K(M_1)$

Associated to $\mathcal{SE}, A$ are the probabilities

$$\Pr\left[\mathrm{Left}^A_{\mathcal{SE}} \Rightarrow 1\right] \quad \Big| \quad \Pr\left[\mathrm{Right}^A_{\mathcal{SE}} \Rightarrow 1\right]$$

that A outputs 1 in each world. The (ind-cpa) advantage of A is

$$\mathbf{Adv}^{\text{ind-cpa}}_{\mathcal{SE}}(A) = \Pr\left[\mathrm{Right}^A_{\mathcal{SE}} \Rightarrow 1\right] - \Pr\left[\mathrm{Left}^A_{\mathcal{SE}} \Rightarrow 1\right]$$

Message length restriction

It is required that $|M_0| = |M_1|$ in any query M_0, M_1 that A makes to **LR**. An adversary A violating this condition is considered invalid.

This reflects that encryption is not aiming to hide the length of messages.

Advantage Interpretation

$\mathbf{Adv}_{\mathcal{SE}}^{\text{ind-cpa}}(A) \approx 1$ means A is doing well and $\mathcal{SE}$ is not ind-cpa-secure.

$\mathbf{Adv}_{\mathcal{SE}}^{\text{ind-cpa}}(A) \approx 0$ (or ≤ 0) means A is doing poorly and $\mathcal{SE}$ resists the attack A is mounting.

Adversary resources are its running time t and the number q of its oracle queries, the latter representing the number of messages encrypted.

Security: $\mathcal{SE}$ is IND-CPA-secure if $\mathbf{Adv}_{\mathcal{SE}}^{\text{ind-cpa}}(A)$ is "small" for ALL A that use "practical" amounts of resources.

Insecurity: $\mathcal{SE}$ is not IND-CPA-secure if we can specify an explicit A that uses "few" resources yet achieves "high" ind-cpa-advantage.

Security Analysis of ECB

Let $E : \{0,1\}^k \times \{0,1\}^n \to \{0,1\}^n$ be a block cipher. Recall that ECB mode defines symmetric encryption scheme $\mathcal{SE} = (\mathcal{K}, \mathcal{E}, \mathcal{D})$ with

$$\mathcal{E}_K(M) = E_K(M[1])E_K(M[2]) \cdots E_K(M[m])$$

Can we design A so that

$$\mathbf{Adv}^{\text{ind-cpa}}_{\mathcal{SE}}(A) = \Pr\left[\mathrm{Right}^A_{\mathcal{SE}} \Rightarrow 1\right] - \Pr\left[\mathrm{Left}^A_{\mathcal{SE}} \Rightarrow 1\right]$$

is close to 1?

Adversary

Let $\mathcal{E}_K(M) = E_K(M[1]) \cdots E_K(M[m])$.

adversary A
$C_1 \leftarrow \mathbf{LR}(0^n, 0^n)\,;\; C_2 \leftarrow \mathbf{LR}(1^n, 0^n)$
$\text{if } C_1 = C_2 \text{ then return } 1 \text{ else return } 0$

Right Game Analysis

$\mathcal{E}$ is defined by $\mathcal{E}_K(M) = E_K(M[1]) \cdots E_K(M[m])$.

adversary A
$C_1 \leftarrow \mathbf{LR}(0^n, 0^n)$; $C_2 \leftarrow \mathbf{LR}(1^n, 0^n)$
if $C_1 = C_2$ then return 1 else return 0

Game $\mathrm{Right}_{\mathcal{SE}}$
procedure Initialize
$K \xleftarrow{\$} \mathcal{K}$
procedure LR(M_0, M_1)
Return $\mathcal{E}_K(M_1)$

Then

$$\Pr\left[\mathrm{Right}^A_{\mathcal{SE}} \Rightarrow 1\right] =$$

Left Game Analysis

$\mathcal{E}$ is defined by $\mathcal{E}_K(M) = E_K(M[1]) \cdots E_K(M[m])$.

adversary A
$C_1 \leftarrow \mathbf{LR}(0^n, 0^n)$; $C_2 \leftarrow \mathbf{LR}(1^n, 0^n)$
if $C_1 = C_2$ then return 1 else return 0

Game $\mathrm{Left}_{\mathcal{SE}}$
procedure Initialize
$K \xleftarrow{\$} \mathcal{K}$
procedure LR(M_0, M_1)
Return $\mathcal{E}_K(M_0)$

Then

$$\Pr\left[\mathrm{Left}^A_{\mathcal{SE}} \Rightarrow 1\right] =$$

Conclusion

adversary A
$C_1 \leftarrow \mathbf{LR}(0^n, 0^n)\,;\; C_2 \leftarrow \mathbf{LR}(1^n, 0^n)$
if $C_1 = C_2$ then return 1 else return 0

$$\begin{aligned}\mathbf{Adv}^{\text{ind-cpa}}_{\mathcal{SE}}(A) &= \overbrace{\Pr\left[\mathrm{Right}^A_{\mathcal{SE}} = 1\right]}^{1} - \overbrace{\Pr\left[\mathrm{Left}^A_{\mathcal{SE}} = 1\right]}^{0} \\ &= 1\end{aligned}$$

And A is very efficient, making only two queries.

Thus ECB is **not** IND-CPA secure.

Other Attacks?

- Can you find an attack where all messages queried to the LR oracle (counting both sides) are distinct?

ECB Penguin

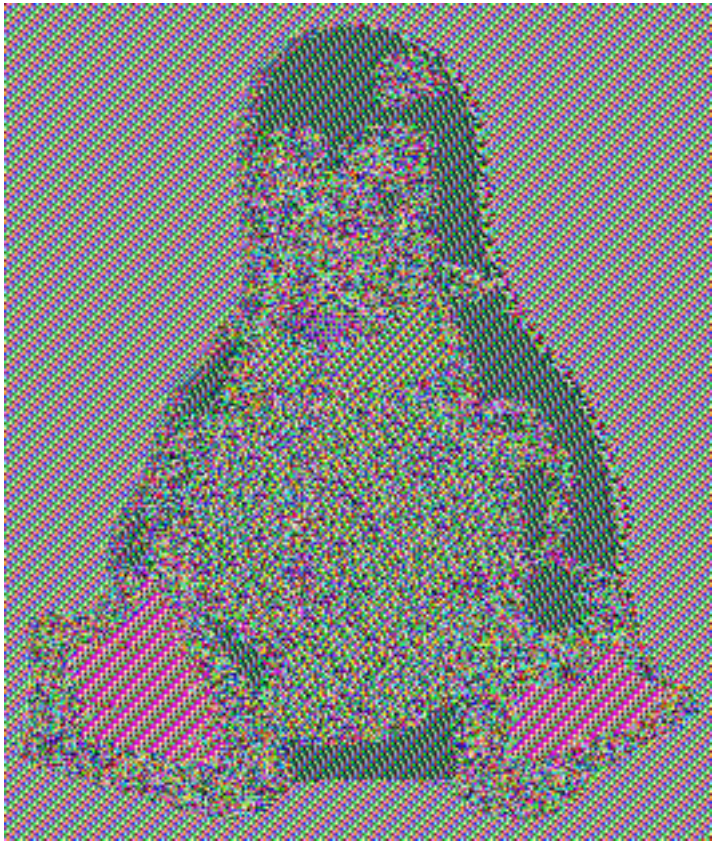

IND-CPA

We claim that if encryption scheme $\mathcal{SE} = (\mathcal{K}, \mathcal{E}, \mathcal{D})$ is IND-CPA secure then the ciphertext hides ALL partial information about the plaintext.

For example, from $C_1 \xleftarrow{\$} \mathcal{E}_K(M_1)$ and $C_2 \xleftarrow{\$} \mathcal{E}_K(M_2)$ the adversary cannot

- get M_1
- get 1st bit of M_1
- get XOR of the 1st bits of M_1, M_2
- etc.

Security Analysis of CTR-$

Let $E : \{0,1\}^k \times \{0,1\}^n \to \{0,1\}^n$ be a blockcipher and $\mathcal{SE} = (\mathcal{K}, \mathcal{E}, \mathcal{D})$ the corresponding CTR$ symmetric encryption scheme. Suppose 1-block messages M_0, M_1 are encrypted:

$$C_0[0]C_0[1] \xleftarrow{\$} \mathcal{E}(K, M_0)$$

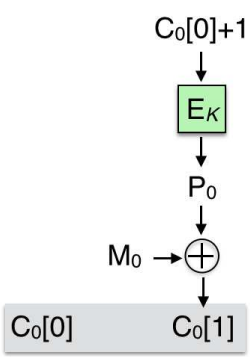

$$C_1[0]C_1[1] \xleftarrow{\$} \mathcal{E}(K, M_1)$$

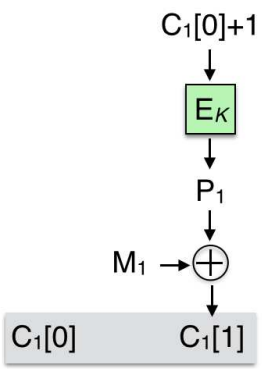

Let us say we are **lucky** If $C_0[0] = C_1[0]$. If so:

$$C_0[1] = C_1[1] \text{ if and only if } M_0 = M_1$$

So if we are lucky we can detect message equality and violate IND-CPA.

The Adversary

Let $1 \leq q < 2^n$ be a parameter and let $\langle i \rangle$ be integer i encoded as an ℓ-bit string.

adversary A

$\text{for } i = 1, ..., q \text{ do}$

$\quad C^i[0]C^i[1] \xleftarrow{\$} \mathbf{LR}(\langle i \rangle, \langle 0 \rangle)$

$S \leftarrow \{(j, t) \colon C^j[0] = C^t[0] \text{ and } j < t\}$

If $S \neq \emptyset$, then

$\quad (j, t) \xleftarrow{\$} S$

$\quad$ If $C^j[1] = C^t[1]$ then $\text{return } 1$

$\text{return } 0$

Right Game Analysis

adversary A

$\text{for } i = 1, ..., q \text{ do}$

$\quad C^i[0]C^i[1] \xleftarrow{\$} \mathbf{LR}(\langle i \rangle, \langle 0 \rangle)$

$S \leftarrow \{(j,t) \colon C^j[0] = C^t[0] \text{ and } j < t\}$

If $S \neq \emptyset$, then

$\quad (j,t) \xleftarrow{\$} S$

$\quad$ If $C^j[1] = C^t[1]$ then $\text{return } 1$

$\text{return } 0$

Game $\mathrm{Right}_{\mathcal{SE}}$

procedure Initialize

$K \xleftarrow{\$} \mathcal{K}$

procedure LR(M_0, M_1)

$C[0] \xleftarrow{\$} \{0,1\}^n$

$P \leftarrow E(K, C[0]+1)$

$C[1] \leftarrow P \oplus M_1$

Return $C[0]C[1]$

If $C^j[0] = C^t[0]$ (lucky) then

$$C^j[1] = \langle 0 \rangle \oplus E_K(C^j[0]+1) = \langle 0 \rangle \oplus E_K(C^t[0]+1) = C^t[1]$$

so

$$\Pr\left[\mathrm{Right}^A_{\mathcal{SE}} \Rightarrow 1\right] = \Pr\left[S \neq \emptyset\right] = C(2^n, q)$$

Left Game Analysis

adversary A

for $i = 1, ..., q$ do
  $C^i[0]C^i[1] \xleftarrow{\$} \mathbf{LR}(\langle i \rangle, \langle 0 \rangle)$
$S \leftarrow \{(j,t) \colon C^j[0] = C^t[0] \text{ and } j < t\}$
If $S \neq \emptyset$, then
  $(j,t) \xleftarrow{\$} S$
  If $C^j[1] = C^t[1]$ then return 1
return 0

Game $\mathrm{Left}_{\mathcal{SE}}$

procedure Initialize
$K \xleftarrow{\$} \mathcal{K}$

procedure LR(M_0, M_1)
$C[0] \xleftarrow{\$} \{0,1\}^n$
$P \leftarrow E(K, C[0]+1)$
$C[1] \leftarrow P \oplus M_0$
Return $C[0]C[1]$

If $C^j[0] = C^t[0]$ (lucky) then

$$C^j[1] = \langle j \rangle \oplus E_K(C^j[0]+1) \neq \langle t \rangle \oplus E_K(C^t[0]+1) = C^t[1]$$

so

$$\Pr\left[\mathrm{Left}^A_{\mathcal{SE}} \Rightarrow 1\right] = 0.$$

Conclusion

$$\begin{aligned}\mathbf{Adv}^{\text{ind-cpa}}_{\mathcal{SE}}(A) &= \Pr\left[\mathrm{Right}^{A}_{\mathcal{SE}} \Rightarrow 1\right] - \Pr\left[\mathrm{Left}^{A}_{\mathcal{SE}} \Rightarrow 1\right] \\ &= C(2^n, q) - 0 \;\geq\; 0.3 \cdot \frac{q(q-1)}{2^n}\end{aligned}$$

Conclusion: CTR$ can be broken (in the IND-CPA sense) in about $2^{n/2}$ queries, where n is the block length of the underlying block cipher, regardless of the cryptanalytic strength of the block cipher.

Security of CTR-$

So far: A q-query adversary can break CTR$ with advantage $\approx \frac{q^2}{2^{n+1}}$

Question: Is there any better attack?

Answer: NO!

We can prove that the best q-query attack short of breaking the block cipher has advantage at most

$$\frac{\sigma^2}{2^n}$$

where σ is the total number of blocks encrypted.

Example: If q 1-block messages are encrypted then $\sigma = q$ so the adversary advantage is not more than $q^2/2^n$.

For $E = \text{AES}$ this means up to 2^{64} blocks may be securely encrypted, which is good.

Theorem for CTR$

Theorem: [BDJR98] Let $E : \{0,1\}^k \times \{0,1\}^n \to \{0,1\}^n$ be a block cipher and $\mathcal{SE} = (\mathcal{K}, \mathcal{E}, \mathcal{D})$ the corresponding CTR$ symmetric encryption scheme. Let A be an ind-cpa adversary against $\mathcal{SE}$ that has running time t and makes at most q **LR** queries, these totalling at most σ blocks. Then there is a prf-adversary B against E such that

$$\mathbf{Adv}^{\text{ind-cpa}}_{\mathcal{SE}}(A) \leq 2 \cdot \mathbf{Adv}^{\text{prf}}_{E}(B) + \frac{\sigma^2}{2^n}$$

Furthermore, B makes at most σ oracle queries and has running time $t + \Theta(\sigma \cdot n)$.

Theorem for CBC$

Theorem: [BDJR97] Let $E : \{0,1\}^k \times \{0,1\}^n \to \{0,1\}^n$ be a block cipher and $\mathcal{SE} = (\mathcal{K}, \mathcal{E}, \mathcal{D})$ the corresponding CBC$ symmetric encryption scheme. Let A be an ind-cpa adversary against $\mathcal{SE}$ that has running time t and makes at most q **LR** queries, the messages across them totaling at most σ blocks. Then there is a prf-adversary B against E such that

$$\mathbf{Adv}^{\text{ind-cpa}}_{\mathcal{SE}}(A) \leq 2 \cdot \mathbf{Adv}^{\text{prf}}_{E}(B) + \frac{\sigma^2}{2^n}$$

Furthermore, B makes at most σ oracle queries and has running time $t + \Theta(\sigma \cdot n)$.