AXVU13P开发平台

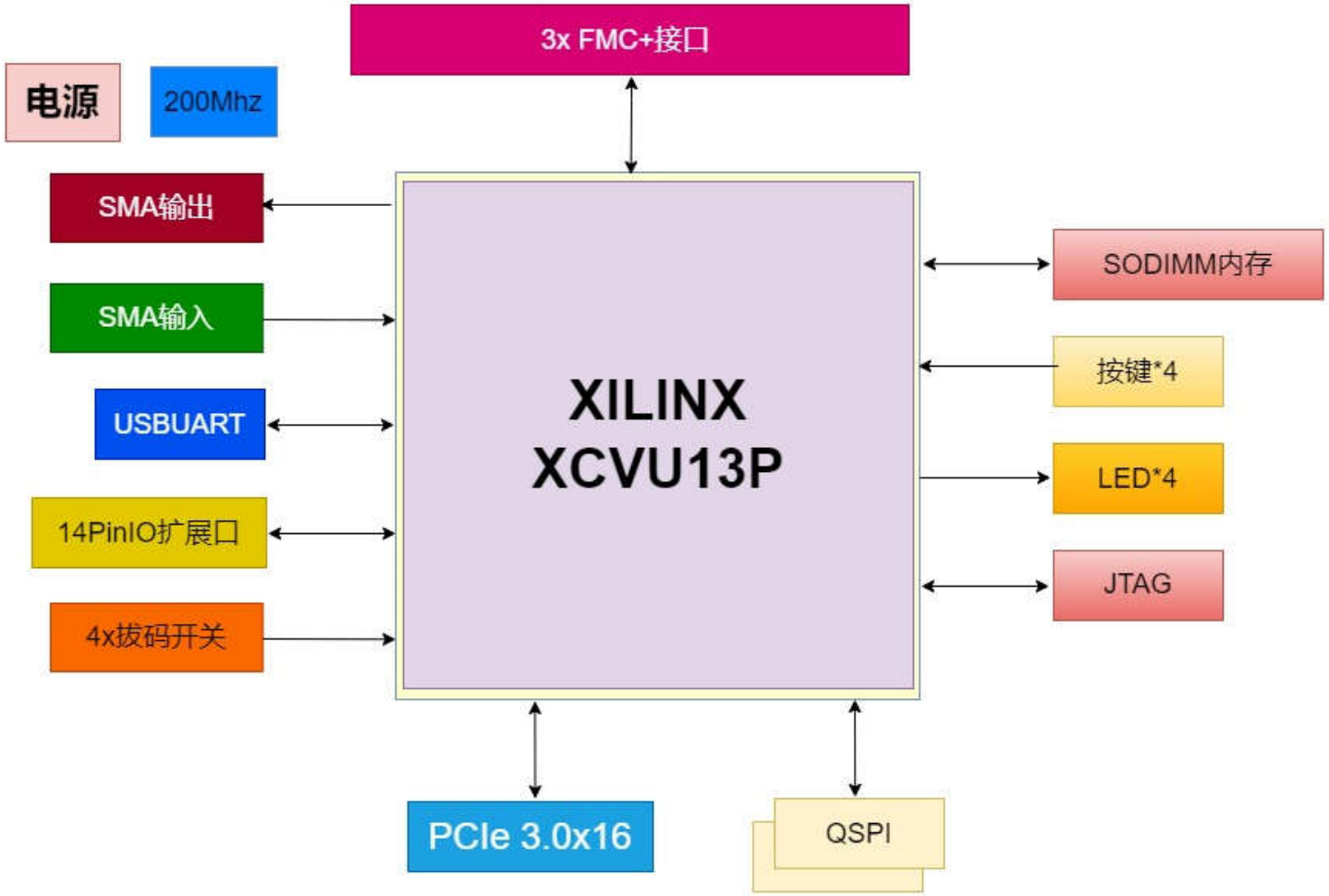

ALINX Confidential

ALINX Http://www.alinx.com		
Title: BLOCK DIAGRAM		
Size	Document Number: AXVU13P Schematics _V1.0	Rev 1.0
Date: Friday, September 27, 2024	Sheet 1 of 36	

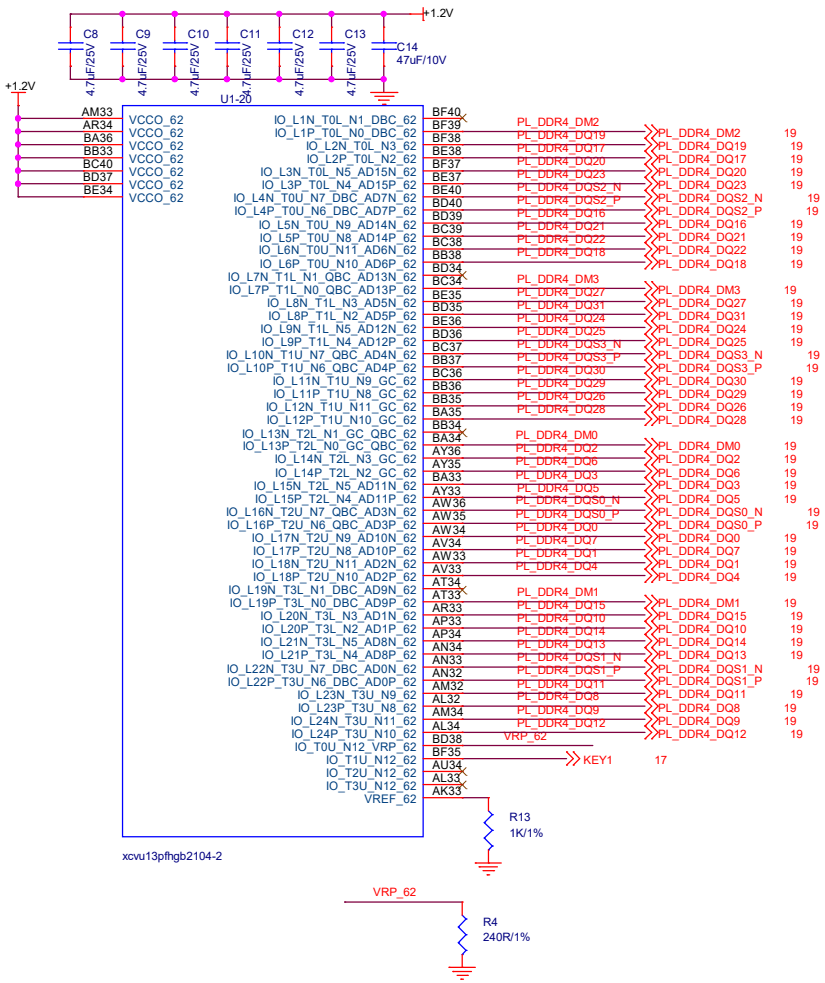

ALINX Confidential

ALINX	Http://www.alinx.com
Title	FPGA_BANK61_62
Size / Document Number	AXVU13P Schematics
Rev	1.0
Date:	Tuesday, July 02, 2024
Sheet	2 of 36

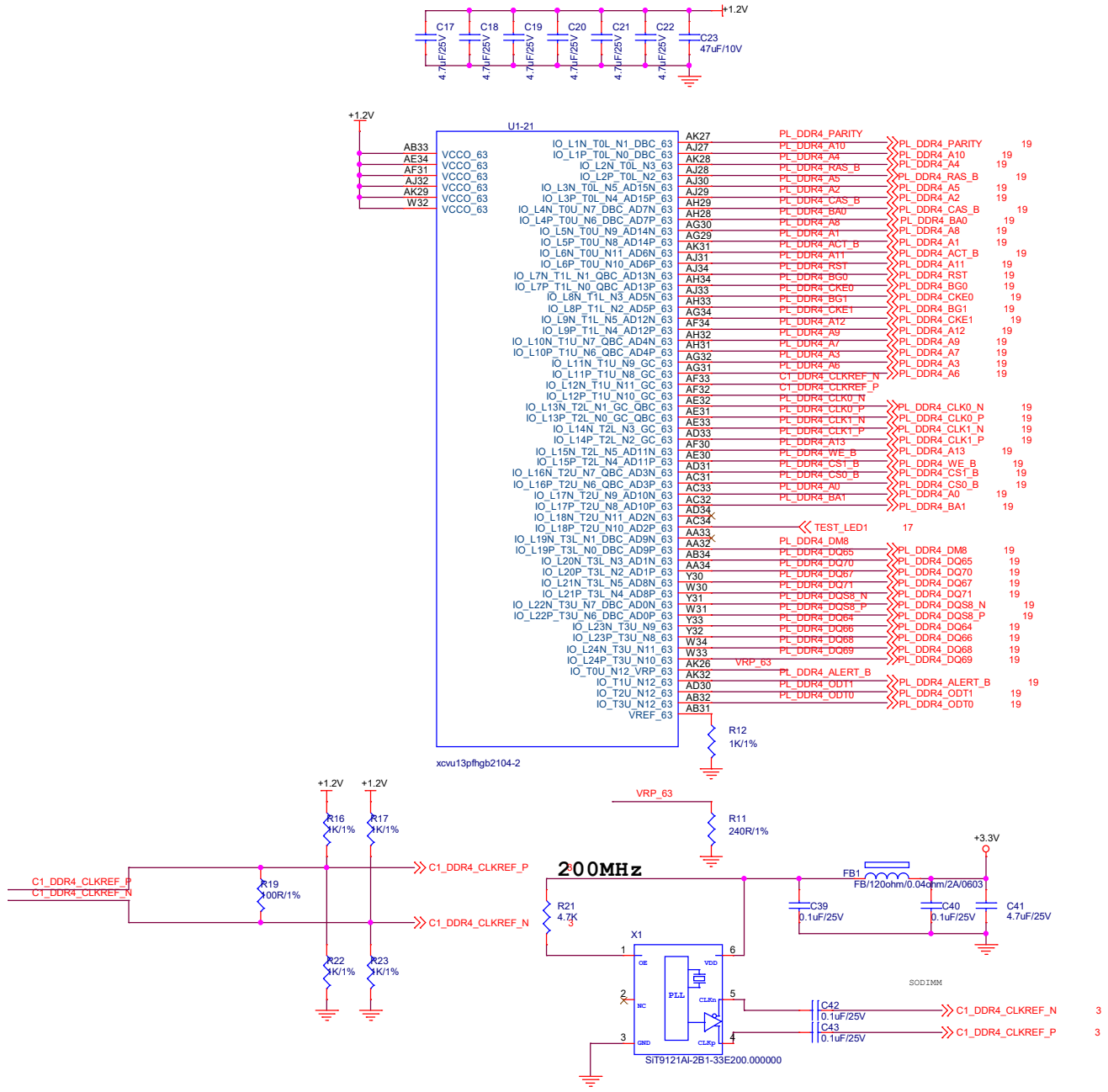

ALINX Confidential

ALINX	Http://www.alinx.com
Title	FPGA_BANK63
Size	Document Number: AXVU13P Schematics
Rev	1.0
Date:	Wednesday, July 03, 2024
Sheet	3 of 36

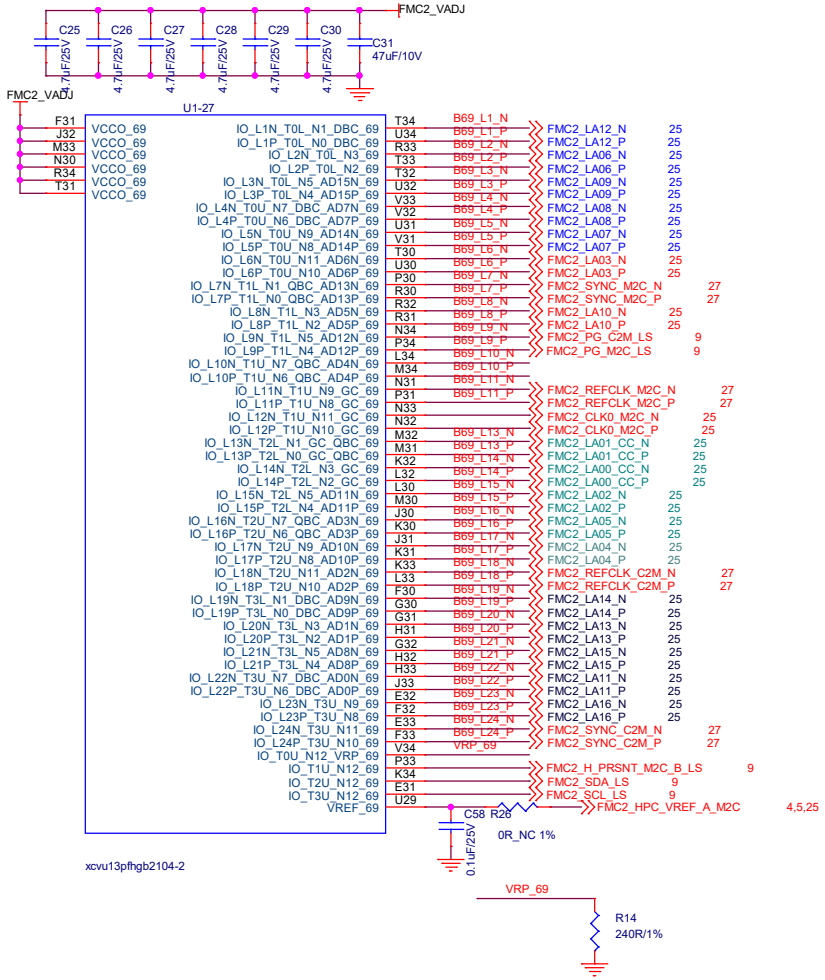

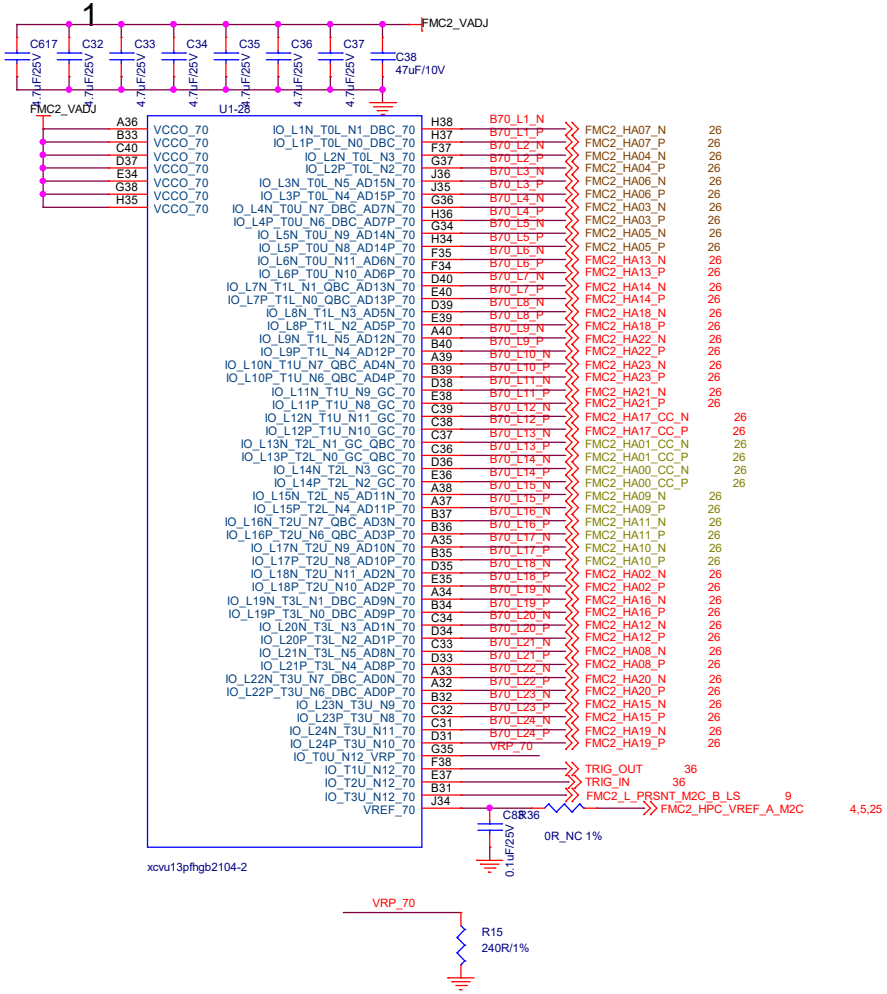

ALINX Confidential

ALINX	Http://www.alinx.com
Title	FPGA_BANK69_70
Size	
Document Number	AXVU13P Schematics
Rev	1.0
Date: Friday, September 27, 2024	Sheet 4 of 36

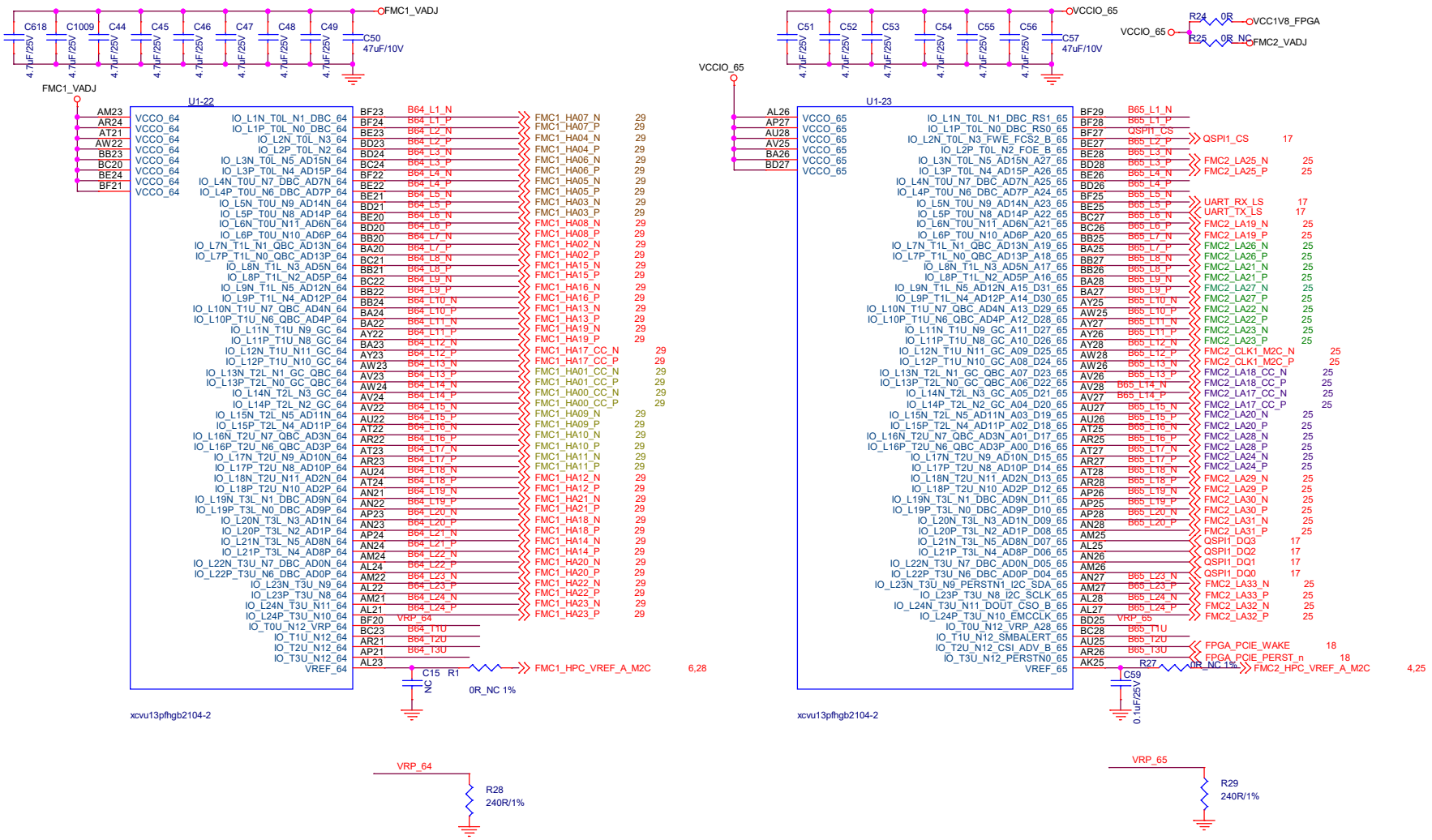

ALINX Http://www.alinx.com

Title: FPGA_BANK64_65

Size | Document Number: AXVU13P Schematics | Rev 1.0

Date: Friday, September 27, 2024 | Sheet 5 of 36

ALINX Confidential

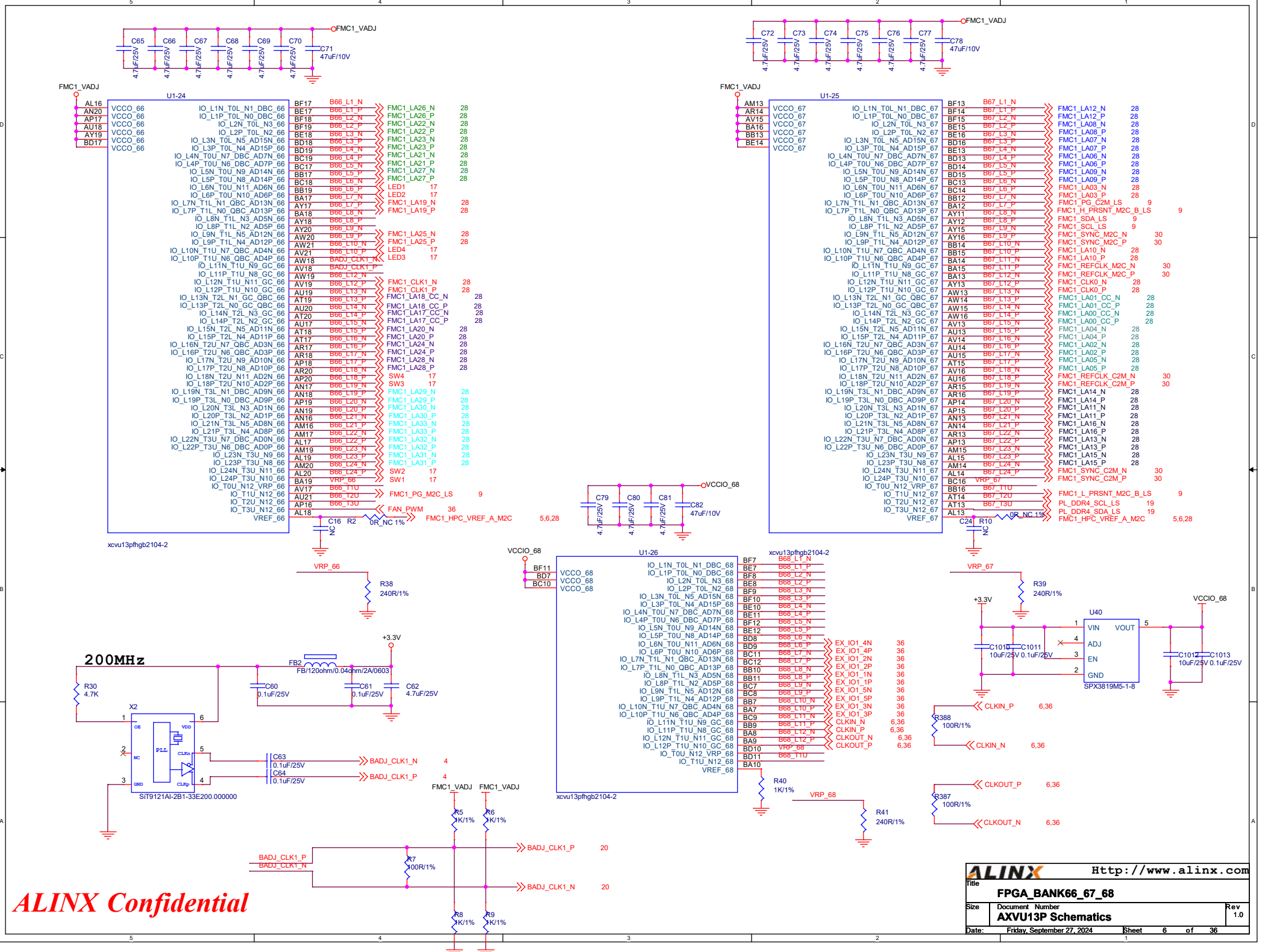
FMC1_VADJ
C65 C66 C67 C68 C69 C70 C71
4.7uF/25V
47uF/10V
U1-24
xcvu13pfhgb2104-2
C72 C73 C74 C75 C76 C77 C78
U1-25
C79 C80 C81 C82
VCCIO_68
VRP_66
R38
240R/1%
U1-26
VRP_67
R39
240R/1%
+3.3V
200MHz
R30
4.7K
X2
SiT9121AI-2B1-33E200.000000
FB2
FB/120ohm/0.04ohm/2A/0603
C60
0.1uF/25V
C61
0.1uF/25V
C62
4.7uF/25V
C63
C64
BADJ_CLK1_N
BADJ_CLK1_P
R5
1K/1%
R6
1K/1%
R7
100R/1%
R8
1K/1%
R9
1K/1%
R40
1K/1%
VRP_68
R41
240R/1%
U40
SPX3819M5-1-8
C1010
C1011
C1012
C1013
10uF/25V
0.1uF/25V
R388
100R/1%
R387
100R/1%
CLKIN_P
CLKIN_N
CLKOUT_P
CLKOUT_N
ALINX Confidential
ALINX
Http://www.alinx.com
Title
FPGA_BANK66_67_68
Size
Document Number
AXVU13P Schematics
Rev
1.0
Date: Friday, September 27, 2024
Sheet 6 of 36

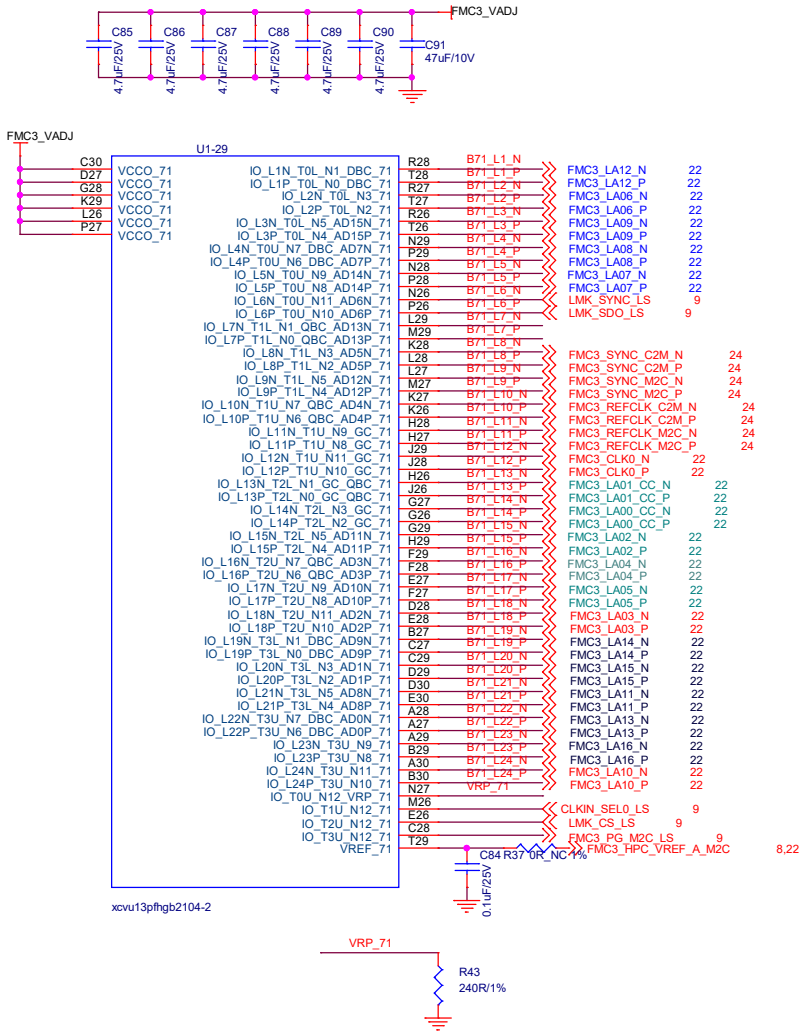

ALINX Confidential

ALINX	Http://www.alinx.com
Title	FPGA_BANK71
Size	Document Number: AXVU13P Schematics
Rev	1.0
Date: Friday, October 18, 2024	Sheet 7 of 36

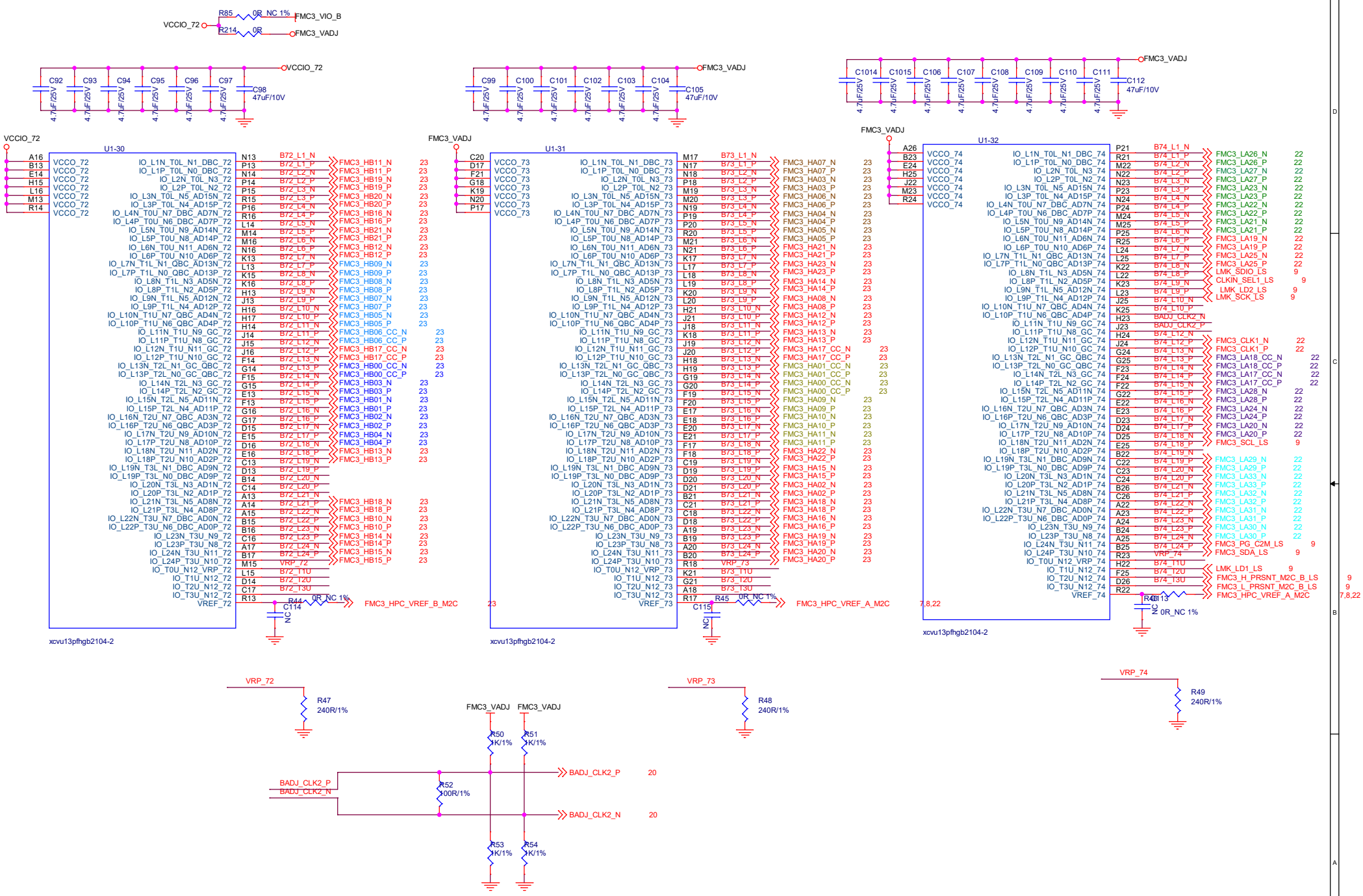

ALINX Confidential

ALINX	Http://www.alinx.com
Title	FPGA_BANK72_73_74
Size	Document Number: AXVU13P Schematics
Rev	1.0
Date:	Friday, September 27, 2024
Sheet	8 of 36

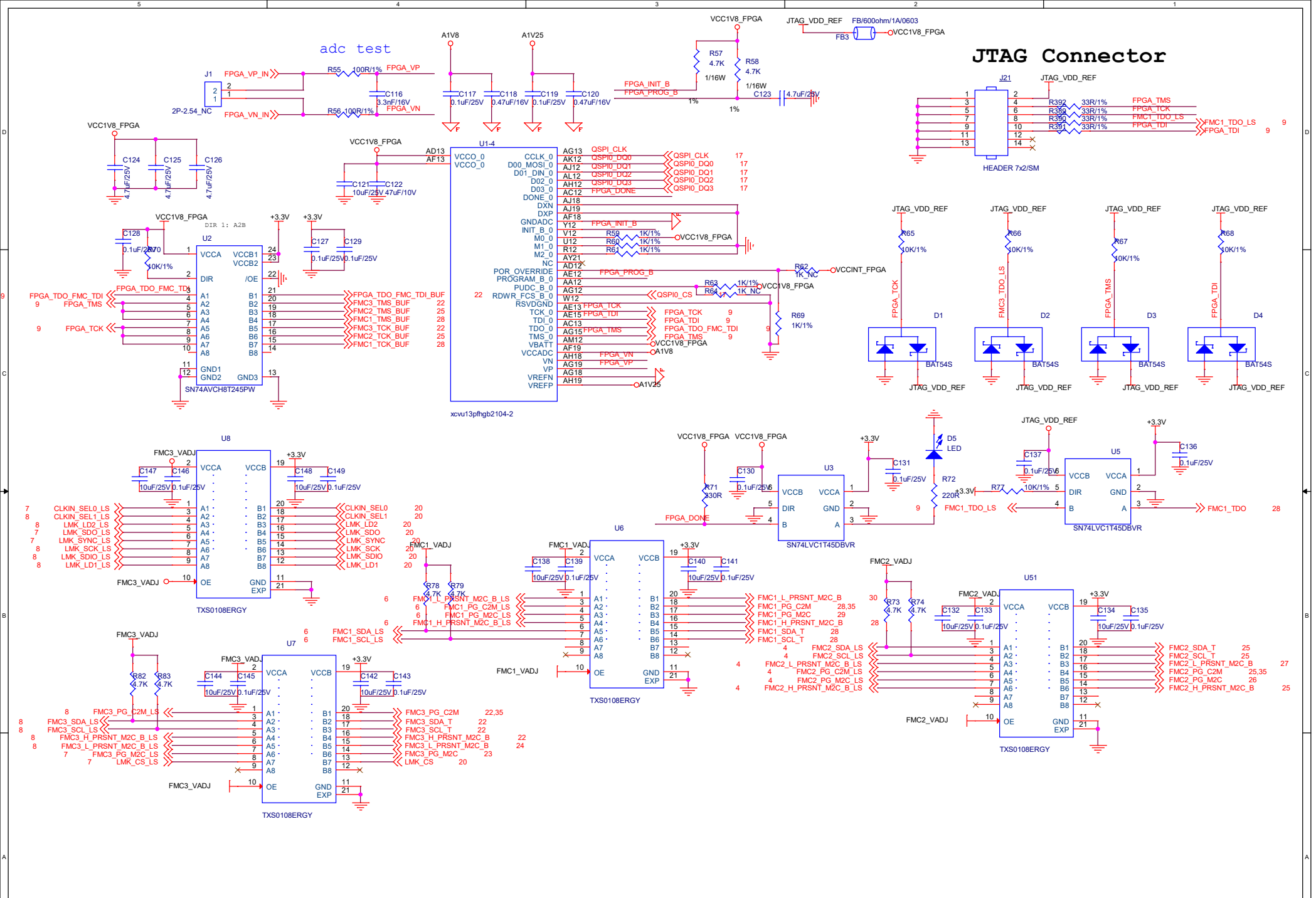
adc test
JTAG Connector
J1
2P-2.54_NC
FPGA_VP_IN
FPGA_VN_IN
R55 100R/1%
R56 100R/1%
C116 3.3nF/16V
FPGA_VP
FPGA_VN
A1V8
A1V25
C117 0.1uF/25V
C118 0.47uF/16V
C119 0.1uF/25V
C120 0.47uF/16V
VCC1V8_FPGA
R57 4.7K 1/16W
R58 4.7K 1/16W
FPGA_INIT_B
FPGA_PROG_B
C123 4.7uF/25V
JTAG_VDD_REF
FB/600ohm/1A/0603
FB3
J21
HEADER 7x2/SM
R392 33R/1%
R389 33R/1%
R390 33R/1%
R391 33R/1%
FPGA_TMS
FPGA_TCK
FMC1_TDO_LS
FPGA_TDI
C124 4.7uF/25V
C125 4.7uF/25V
C126 4.7uF/25V
AD13
AF13
C121 10uF/25V
C122 47uF/10V
U1-4
xcvu13pfhgb2104-2
QSPI_CLK
QSPI0_DQ0
QSPI0_DQ1
QSPI0_DQ2
QSPI0_DQ3
FPGA_DONE
QSPI0_CS
VCCINT_FPGA
R62 1K_NC
R63 1K/1%
R64 1K_NC
R69 1K/1%
R59 1K/1%
R60 1K/1%
R61 1K/1%
U2
SN74AVCH8T245PW
DIR 1: A2B
C128 0.1uF/25V
R70 10K/1%
C127 0.1uF/25V
C129 0.1uF/25V
+3.3V
FPGA_TDO_FMC_TDI
FPGA_TMS
FPGA_TCK
FPGA_TDO_FMC_TDI_BUF
FMC3_TMS_BUF
FMC2_TMS_BUF
FMC1_TMS_BUF
FMC3_TCK_BUF
FMC2_TCK_BUF
FMC1_TCK_BUF
R65 10K/1%
R66 10K/1%
R67 10K/1%
R68 10K/1%
D1
D2
D3
D4
BAT54S
U8
TXS0108ERGY
FMC3_VADJ
C147 10uF/25V
C146 0.1uF/25V
C148 10uF/25V
C149 0.1uF/25V
CLKIN_SEL0_LS
CLKIN_SEL1_LS
LMK_LD2_LS
LMK_SDO_LS
LMK_SYNC_LS
LMK_SCK_LS
LMK_SDIO_LS
LMK_LD1_LS
CLKIN_SEL0
CLKIN_SEL1
LMK_LD2
LMK_SDO
LMK_SYNC
LMK_SCK
LMK_SDIO
LMK_LD1
U3
SN74LVC1T45DBVR
C130 0.1uF/25V
R71 330R
C131 0.1uF/25V
D5 LED
R72 220R
FPGA_DONE
FMC1_TDO_LS
U5
SN74LVC1T45DBVR
C137 0.1uF/25V
C136 0.1uF/25V
R77 10K/1%
FMC1_TDO
U6
TXS0108ERGY
FMC1_VADJ
C138 10uF/25V
C139 0.1uF/25V
C140 10uF/25V
C141 0.1uF/25V
R78 4.7K
R79 4.7K
FMC1_L_PRSNT_M2C_B_LS
FMC1_PG_C2M_LS
FMC1_PG_M2C_LS
FMC1_H_PRSNT_M2C_B_LS
FMC1_SDA_LS
FMC1_SCL_LS
FMC1_L_PRSNT_M2C_B
FMC1_PG_C2M
FMC1_PG_M2C
FMC1_H_PRSNT_M2C_B
FMC1_SDA_T
FMC1_SCL_T
U7
TXS0108ERGY
FMC3_VADJ
R82 4.7K
R83 4.7K
C144 10uF/25V
C145 0.1uF/25V
C142 10uF/25V
C143 0.1uF/25V
FMC3_PG_C2M_LS
FMC3_SDA_LS
FMC3_SCL_LS
FMC3_H_PRSNT_M2C_B_LS
FMC3_L_PRSNT_M2C_B_LS
FMC3_PG_M2C_LS
LMK_CS_LS
FMC3_PG_C2M
FMC3_SDA_T
FMC3_SCL_T
FMC3_H_PRSNT_M2C_B
FMC3_L_PRSNT_M2C_B
FMC3_PG_M2C
LMK_CS
U51
TXS0108ERGY
FMC2_VADJ
R73 4.7K
R74 4.7K
C132 10uF/25V
C133 0.1uF/25V
C134 10uF/25V
C135 0.1uF/25V
FMC2_SDA_LS
FMC2_SCL_LS
FMC2_L_PRSNT_M2C_B_LS
FMC2_PG_C2M_LS
FMC2_PG_M2C_LS
FMC2_H_PRSNT_M2C_B_LS
FMC2_SDA_T
FMC2_SCL_T
FMC2_L_PRSNT_M2C_B
FMC2_PG_C2M
FMC2_PG_M2C
FMC2_H_PRSNT_M2C_B
ALINX
Http://www.alinx.com
Title
FPGA_CFG_JTAG
Size
Document Number
AXVU13P Schematics
Rev 1.0
Date: Friday, October 18, 2024
Sheet 9 of 36
ALINX Confidential

U1-33

MGTYTXP0_124	BF42	MGT124_TX0_P	FMC1_DP0_C2M_P	28
MGTYTXN0_124	BF43	MGT124_TX0_N	FMC1_DP0_C2M_N	28
MGTYTXP1_124	BD42	MGT124_TX1_P	FMC1_DP1_C2M_P	30
MGTYTXN1_124	BD43	MGT124_TX1_N	FMC1_DP1_C2M_N	30
MGTYTXP2_124	BB42	MGT124_TX2_P	FMC1_DP2_C2M_P	30
MGTYTXN2_124	BB43	MGT124_TX2_N	FMC1_DP2_C2M_N	30
MGTYTXP3_124	AW40	MGT124_TX3_P	FMC1_DP3_C2M_P	30
MGTYTXN3_124	AW41	MGT124_TX3_N	FMC1_DP3_C2M_N	30
MGTYRXP0_124	BC45	MGT124_RX0_P	FMC1_DP0_M2C_P	28
MGTYRXN0_124	BC46	MGT124_RX0_N	FMC1_DP0_M2C_N	28
MGTYRXP1_124	BA45	MGT124_RX1_P	FMC1_DP1_M2C_P	30
MGTYRXN1_124	BA46	MGT124_RX1_N	FMC1_DP1_M2C_N	30
MGTYRXP2_124	AW45	MGT124_RX2_P	FMC1_DP2_M2C_P	30
MGTYRXN2_124	AW46	MGT124_RX2_N	FMC1_DP2_M2C_N	30
MGTYRXP3_124	AV43	MGT124_RX3_P	FMC1_DP3_M2C_P	30
MGTYRXN3_124	AV44	MGT124_RX3_N	FMC1_DP3_M2C_N	30
MGTREFCLK0P_124	BA40	MGT124_CLK0_P	FMC1_GBT0_0_M2C_C_P	28
MGTREFCLK0N_124	BA41	MGT124_CLK0_N	FMC1_GBT0_0_M2C_C_N	28
MGTREFCLK1P_124	AY38	MGT124_CLK1_P	FMC1_GBT1_1_M2C_C_P	12,21
MGTREFCLK1N_124	AY39	MGT124_CLK1_N	FMC1_GBT1_1_M2C_C_N	12,21

xcvu13pfhgb2104-2

U1-34

MGTYTXP0_125	AU40	MGT125_TX0_P	FMC1_DP10_C2M_P	30
MGTYTXN0_125	AU41	MGT125_TX0_N	FMC1_DP10_C2M_N	30
MGTYTXP1_125	AT38	MGT125_TX1_P	FMC1_DP9_C2M_P	30
MGTYTXN1_125	AT39	MGT125_TX1_N	FMC1_DP9_C2M_N	30
MGTYTXP2_125	AR40	MGT125_TX2_P	FMC1_DP8_C2M_P	30
MGTYTXN2_125	AR41	MGT125_TX2_N	FMC1_DP8_C2M_N	30
MGTYTXP3_125	AP38	MGT125_TX3_P	FMC1_DP11_C2M_P	30
MGTYTXN3_125	AP39	MGT125_TX3_N	FMC1_DP11_C2M_N	30
MGTYRXP0_125	AU45	MGT125_RX0_P	FMC1_DP10_M2C_P	30
MGTYRXN0_125	AU46	MGT125_RX0_N	FMC1_DP10_M2C_N	30
MGTYRXP1_125	AT43	MGT125_RX1_P	FMC1_DP9_M2C_P	30
MGTYRXN1_125	AT44	MGT125_RX1_N	FMC1_DP9_M2C_N	30
MGTYRXP2_125	AR45	MGT125_RX2_P	FMC1_DP8_M2C_P	30
MGTYRXN2_125	AR46	MGT125_RX2_N	FMC1_DP8_M2C_N	30
MGTYRXP3_125	AP43	MGT125_RX3_P	FMC1_DP11_M2C_P	30
MGTYRXN3_125	AP44	MGT125_RX3_N	FMC1_DP11_M2C_N	30
MGTREFCLK0P_125	AV38	MGT125_CLK0_P	FMC1_GBTCLK2_M2C_C_P	30
MGTREFCLK0N_125	AV39	MGT125_CLK0_N	FMC1_GBTCLK2_M2C_C_N	30
MGTREFCLK1P_125	AU36	MGT125_CLK1_P	FMC1_GBT1_2_M2C_C_P	13,21
MGTREFCLK1N_125	AU37	MGT125_CLK1_N	FMC1_GBT1_2_M2C_C_N	13,21
MGTRREF_LS	BE43	R86 100R/1%	MGTAVTT	
MGTAVTTRCAL_LS	BE42	1% 1/16W		

xcvu13pfhgb2104-2

U1-35

MGTYTXP0_126	AN40	MGT126_TX0_P	FMC1_DP12_C2M_P	30
MGTYTXN0_126	AN41	MGT126_TX0_N	FMC1_DP12_C2M_N	30
MGTYTXP1_126	AM38	MGT126_TX1_P	FMC1_DP13_C2M_P	30
MGTYTXN1_126	AM39	MGT126_TX1_N	FMC1_DP13_C2M_N	30
MGTYTXP2_126	AL40	MGT126_TX2_P	FMC1_DP14_C2M_P	30
MGTYTXN2_126	AL41	MGT126_TX2_N	FMC1_DP14_C2M_N	30
MGTYTXP3_126	AK38	MGT126_TX3_P	FMC1_DP15_C2M_P	30
MGTYTXN3_126	AK39	MGT126_TX3_N	FMC1_DP15_C2M_N	30
MGTYRXP0_126	AN45	MGT126_RX0_P	FMC1_DP12_M2C_P	30
MGTYRXN0_126	AN46	MGT126_RX0_N	FMC1_DP12_M2C_N	30
MGTYRXP1_126	AM43	MGT126_RX1_P	FMC1_DP13_M2C_P	30
MGTYRXN1_126	AM44	MGT126_RX1_N	FMC1_DP13_M2C_N	30
MGTYRXP2_126	AL45	MGT126_RX2_P	FMC1_DP14_M2C_P	30
MGTYRXN2_126	AL46	MGT126_RX2_N	FMC1_DP14_M2C_N	30
MGTYRXP3_126	AK43	MGT126_RX3_P	FMC1_DP15_M2C_P	30
MGTYRXN3_126	AK44	MGT126_RX3_N	FMC1_DP15_M2C_N	30
MGTREFCLK0P_126	AR36	MGT126_CLK0_P	FMC1_GBTCLK3_M2C_C_P	30
MGTREFCLK0N_126	AR37	MGT126_CLK0_N	FMC1_GBTCLK3_M2C_C_N	30
MGTREFCLK1P_126	AN36	MGT126_CLK1_P	FMC1_GBT1_3_M2C_C_P	13,21
MGTREFCLK1N_126	AN37	MGT126_CLK1_N	FMC1_GBT1_3_M2C_C_N	13,21

xcvu13pfhgb2104-2

U1-36

MGTYTXP0_127	AJ40	MGT127_TX0_P	FMC1_DP7_C2M_P	30
MGTYTXN0_127	AJ41	MGT127_TX0_N	FMC1_DP7_C2M_N	30
MGTYTXP1_127	AH38	MGT127_TX1_P	FMC1_DP4_C2M_P	30
MGTYTXN1_127	AH39	MGT127_TX1_N	FMC1_DP4_C2M_N	30
MGTYTXP2_127	AG40	MGT127_TX2_P	FMC1_DP6_C2M_P	30
MGTYTXN2_127	AG41	MGT127_TX2_N	FMC1_DP6_C2M_N	30
MGTYTXP3_127	AF38	MGT127_TX3_P	FMC1_DP5_C2M_P	30
MGTYTXN3_127	AF39	MGT127_TX3_N	FMC1_DP5_C2M_N	30
MGTYRXP0_127	AJ45	MGT127_RX0_P	FMC1_DP7_M2C_P	30
MGTYRXN0_127	AJ46	MGT127_RX0_N	FMC1_DP7_M2C_N	30
MGTYRXP1_127	AH43	MGT127_RX1_P	FMC1_DP4_M2C_P	30
MGTYRXN1_127	AH44	MGT127_RX1_N	FMC1_DP4_M2C_N	30
MGTYRXP2_127	AG45	MGT127_RX2_P	FMC1_DP6_M2C_P	30
MGTYRXN2_127	AG46	MGT127_RX2_N	FMC1_DP6_M2C_N	30
MGTYRXP3_127	AF43	MGT127_RX3_P	FMC1_DP5_M2C_P	30
MGTYRXN3_127	AF44	MGT127_RX3_N	FMC1_DP5_M2C_N	30
MGTREFCLK0P_127	AL36	MGT127_CLK0_P	FMC1_GBT0_1_M2C_C_P	28
MGTREFCLK0N_127	AL37	MGT127_CLK0_N	FMC1_GBT0_1_M2C_C_N	28
MGTREFCLK1P_127	AJ36	MGT127_CLK1_P	FMC1_GBT1_0_M2C_C_P	13,21
MGTREFCLK1N_127	AJ37	MGT127_CLK1_N	FMC1_GBT1_0_M2C_C_N	13,21

xcvu13pfhgb2104-2

U1-37

MGTYTXP0_128	AE40	MGT128_TX0_P	FMC1_DP16_C2M_P	30
MGTYTXN0_128	AE41	MGT128_TX0_N	FMC1_DP16_C2M_N	30
MGTYTXP1_128	AD38	MGT128_TX1_P	FMC1_DP17_C2M_P	30
MGTYTXN1_128	AD39	MGT128_TX1_N	FMC1_DP17_C2M_N	30
MGTYTXP2_128	AC40	MGT128_TX2_P	FMC1_DP18_C2M_P	30
MGTYTXN2_128	AC41	MGT128_TX2_N	FMC1_DP18_C2M_N	30
MGTYTXP3_128	AB38	MGT128_TX3_P	FMC1_DP19_C2M_P	30
MGTYTXN3_128	AB39	MGT128_TX3_N	FMC1_DP19_C2M_N	30
MGTYRXP0_128	AE45	MGT128_RX0_P	FMC1_DP16_M2C_P	30
MGTYRXN0_128	AE46	MGT128_RX0_N	FMC1_DP16_M2C_N	30
MGTYRXP1_128	AD43	MGT128_RX1_P	FMC1_DP17_M2C_P	30
MGTYRXN1_128	AD44	MGT128_RX1_N	FMC1_DP17_M2C_N	30
MGTYRXP2_128	AC45	MGT128_RX2_P	FMC1_DP18_M2C_P	30
MGTYRXN2_128	AC46	MGT128_RX2_N	FMC1_DP18_M2C_N	30
MGTYRXP3_128	AB43	MGT128_RX3_P	FMC1_DP19_M2C_P	30
MGTYRXN3_128	AB44	MGT128_RX3_N	FMC1_DP19_M2C_N	30
MGTREFCLK0P_128	AG36	MGT128_CLK0_P	FMC1_GBTCLK4_M2C_C_P	30
MGTREFCLK0N_128	AG37	MGT128_CLK0_N	FMC1_GBTCLK4_M2C_C_N	30
MGTREFCLK1P_128	AE36	MGT128_CLK1_P	FMC1_GBT1_4_M2C_C_P	13,21
MGTREFCLK1N_128	AE37	MGT128_CLK1_N	FMC1_GBT1_4_M2C_C_N	13,21

xcvu13pfhgb2104-2

ALINX Http://www.alinx.com

Title: FPGA_GTY_124~128

Size | Document Number: AXVU13P Schematics | Rev 1.0

Date: Friday, September 27, 2024 | Sheet 10 of 36

ALINX Confidential

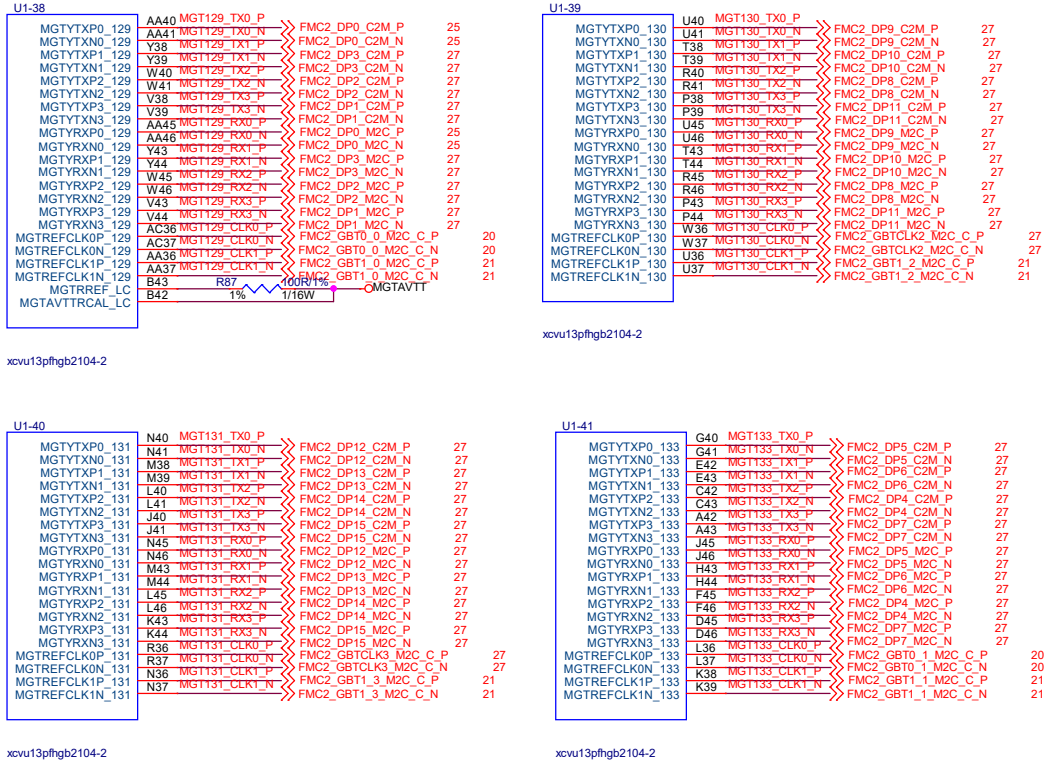

ALINX Http://www.alinx.com

Title: FPGA_GTY_129~133

Size | Document Number: AXVU13P Schematics | Rev 1.0

Date: Friday, September 27, 2024 | Sheet 11 of 36

ALINX Confidential

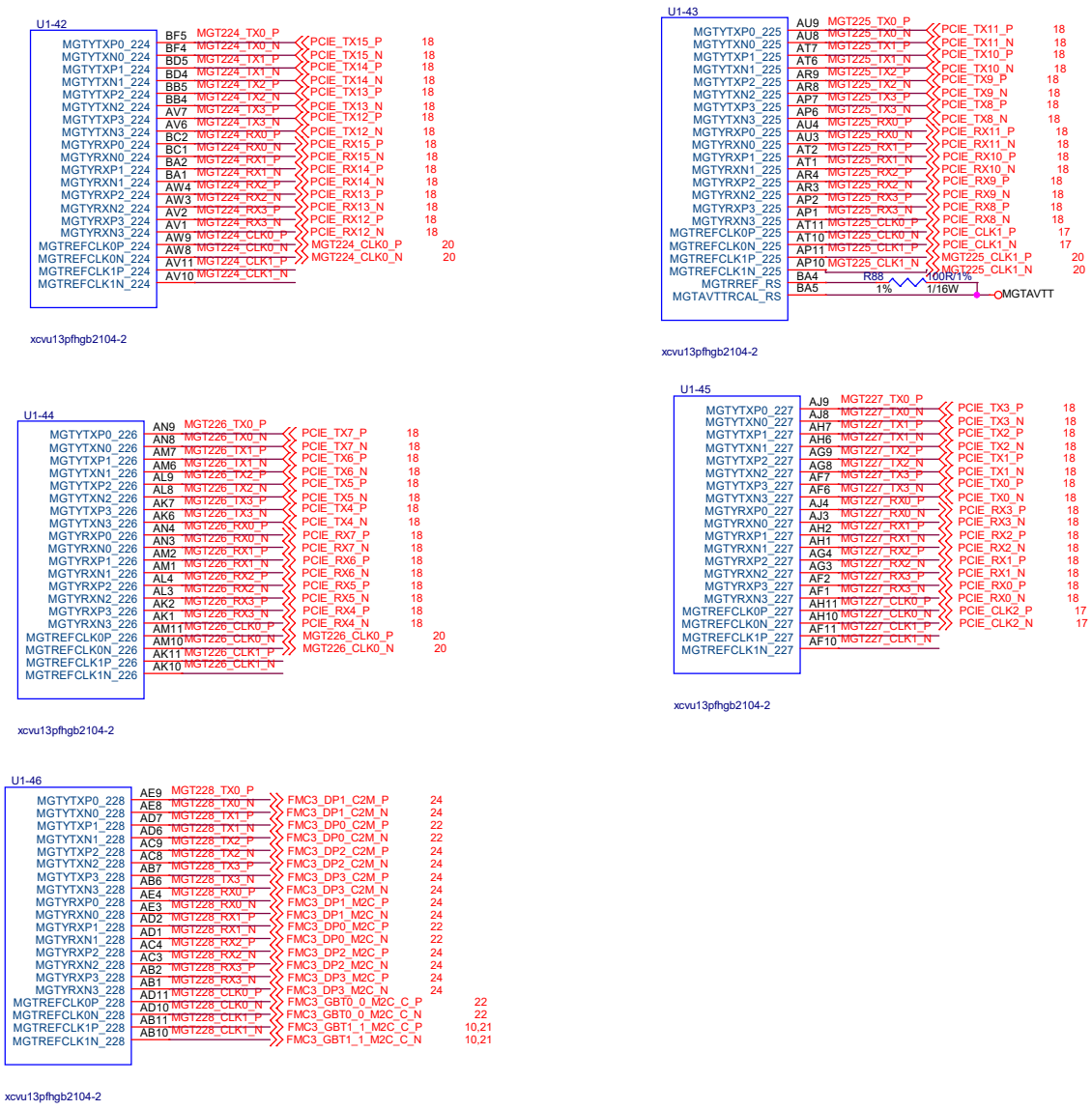

ALINX Http://www.alinx.com

Title: FPGA_GTY_224~228

Size | Document Number: AXVU13P Schematics | Rev 1.0

Date: Friday, September 27, 2024 | Sheet 12 of 36

ALINX Confidential

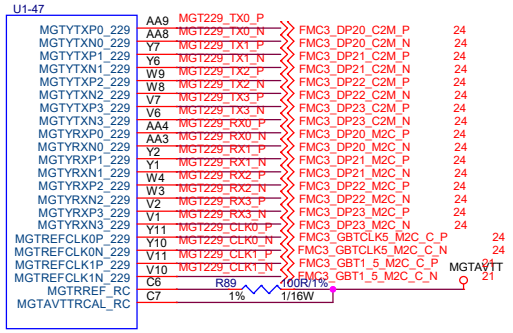

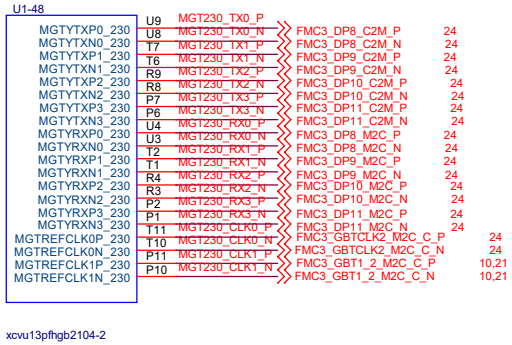

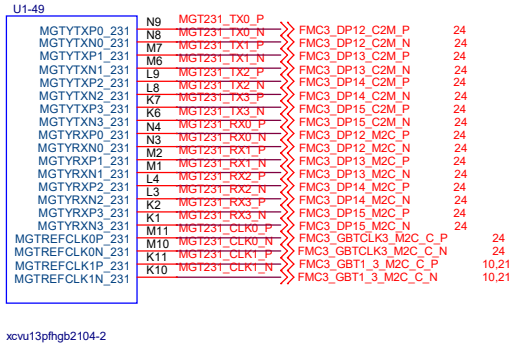

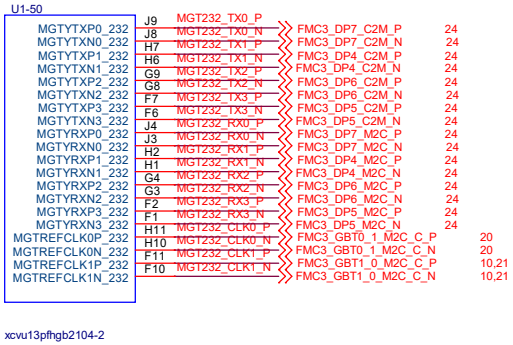

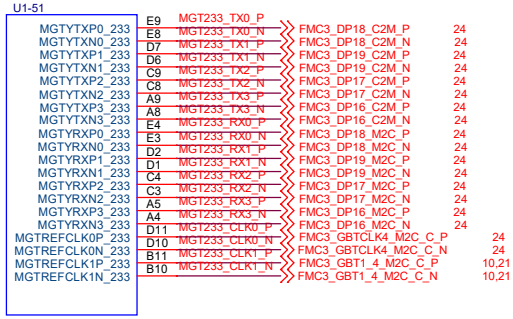

ALINX Http://www.alinx.com

Title: FPGA_GTY_229~233

Size | Document Number: AXVU13P Schematics | Rev 1.0

Date: Friday, September 27, 2024 | Sheet 13 of 36

ALINX Confidential

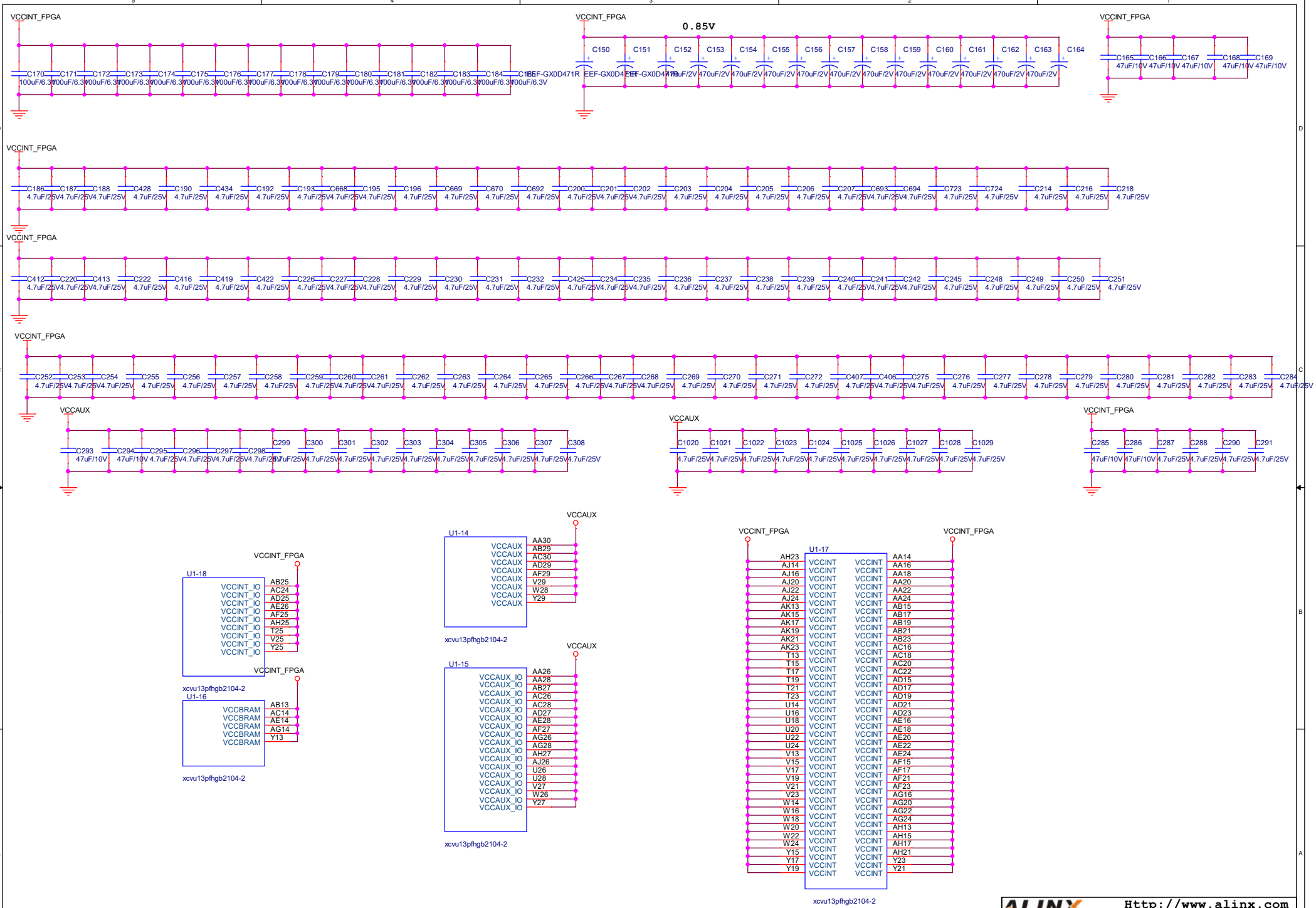

ALINX Http://www.alinx.com

Title	FPGA_POWER
Size	Document Number: AXVU13P Schematics
Rev	1.0
Date:	Tuesday, July 02, 2024
Sheet	14 of 36

ALINX Confidential

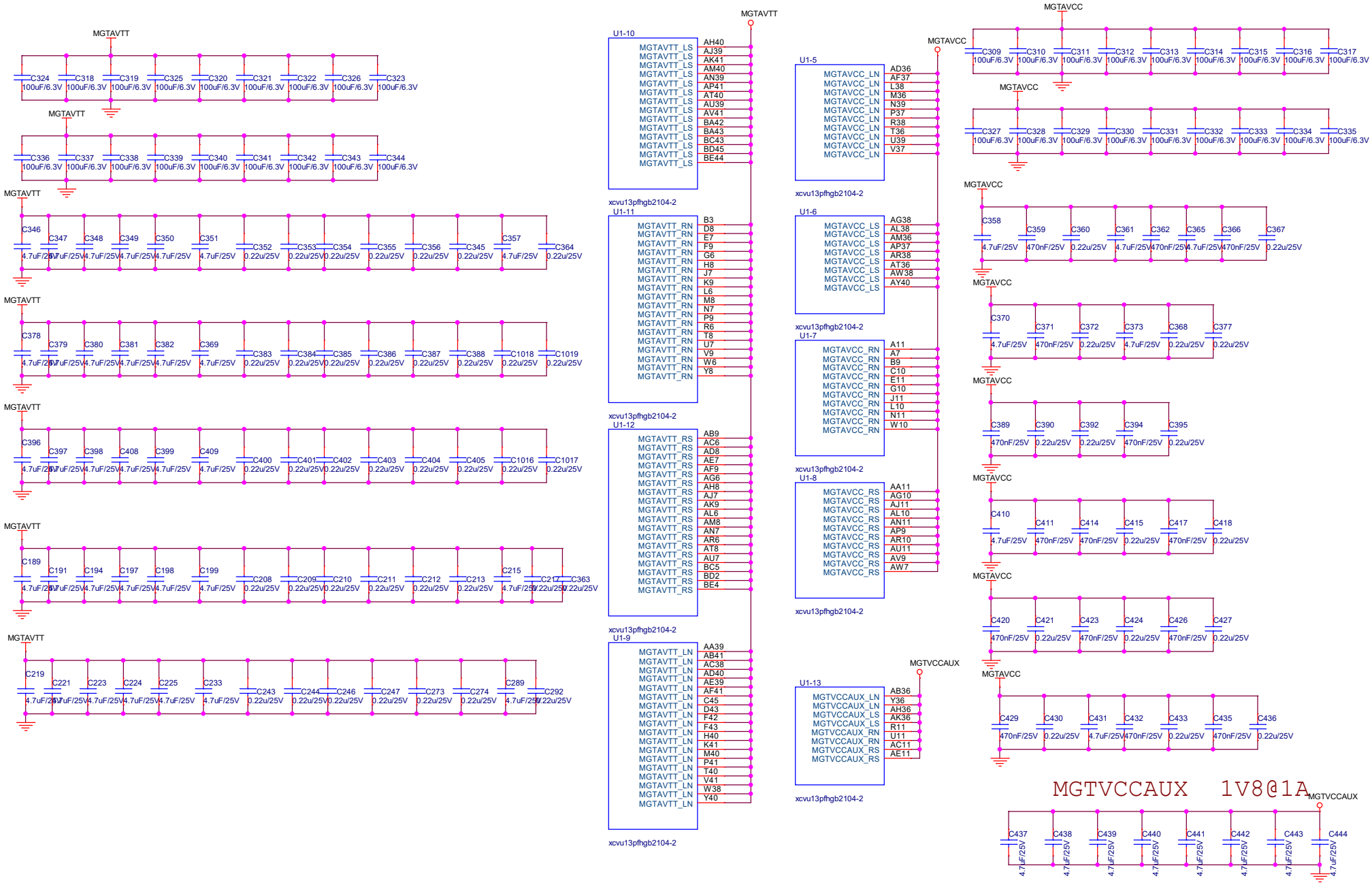

ALINX Confidential

ALINX Http://www.alinx.com		
Title: FPGA_POWER_MGT		
Size	Document Number: AXVU13P Schematics	Rev 1.0
Date: Tuesday, July 02, 2024	Sheet 15 of 36	

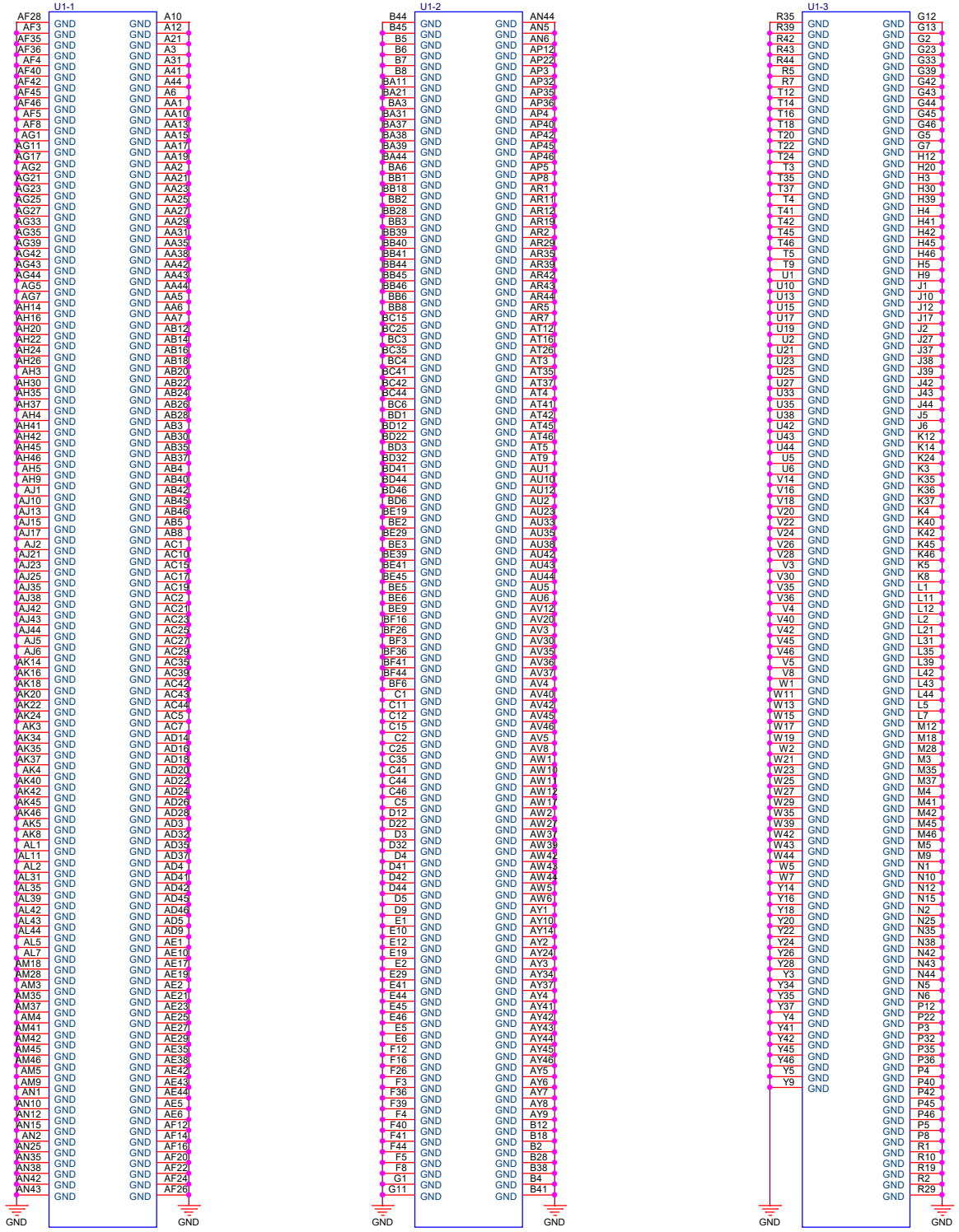

ALINX Confidential

ALINX Http://www.alinx.com

Title: FPGA_GND

Size | Document Number: AXVU13P Schematics | Rev 1.0

Date: Tuesday, July 02, 2024 | Sheet 16 of 36

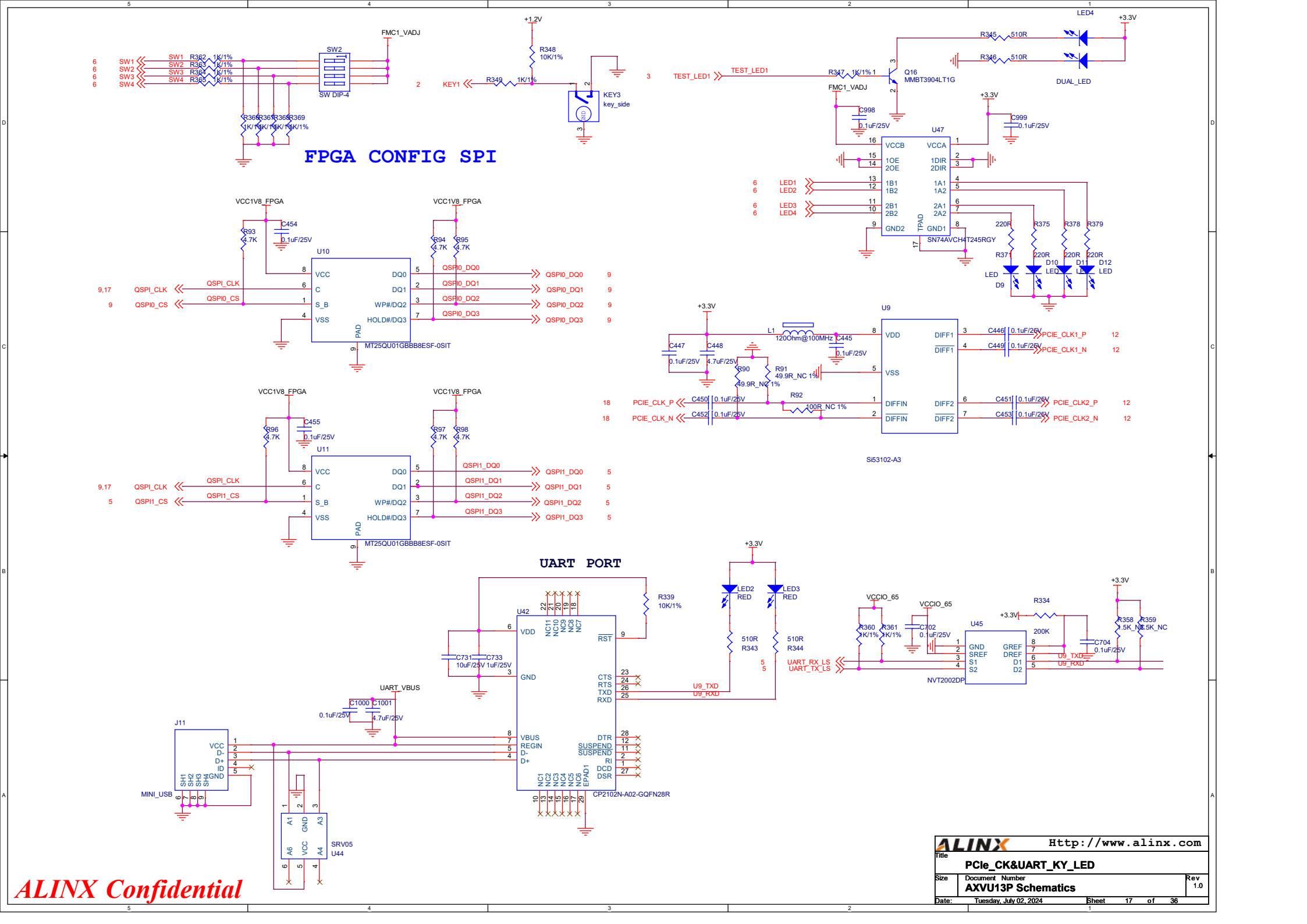
FPGA CONFIG SPI
SW2
SW DIP-4
FMC1_VADJ
KEY3
key_side
U47
SN74AVCH4T245RGY
Q16
MMBT3904LT1G
DUAL_LED
LED4
U10
MT25QU01GBBB8ESF-0SIT
U11
MT25QU01GBBB8ESF-0SIT
U9
Si53102-A3
UART PORT
U42
CP2102N-A02-GQFN28R
U45
NVT2002DP
J11
MINI_USB
SRV05
U44
ALINX Confidential
ALINX Http://www.alinx.com
Title
PCIe_CK&UART_KY_LED
Size
Document Number
AXVU13P Schematics
Rev
1.0
Date: Tuesday, July 02, 2024
Sheet 17 of 36

PCIE X16

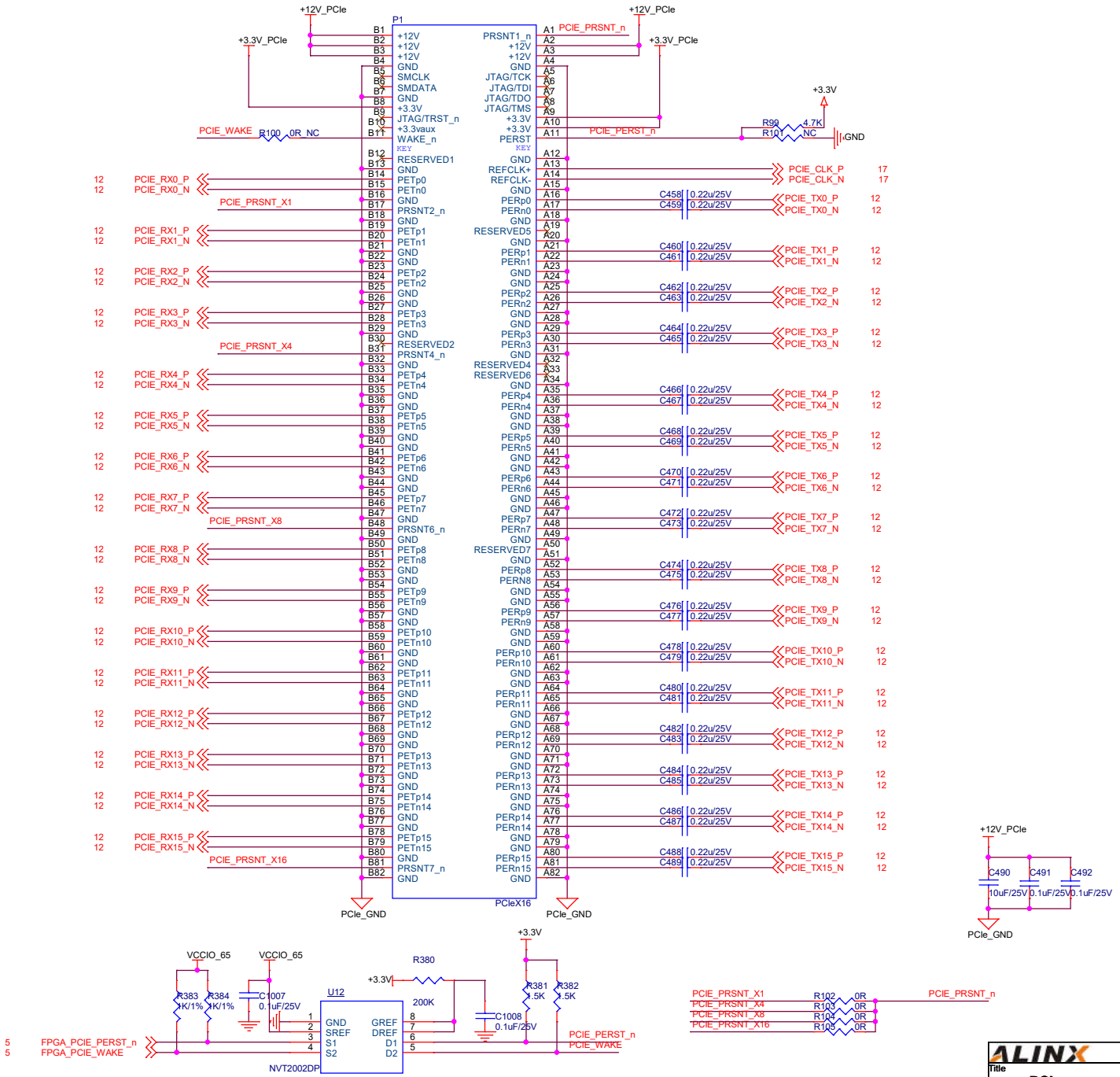

ALINX Confidential

ALINX	Http://www.alinx.com
Title	PCIe
Size	Document Number: AXVU13P Schematics
Rev	1.0
Date:	Tuesday, July 02, 2024
Sheet	18 of 36

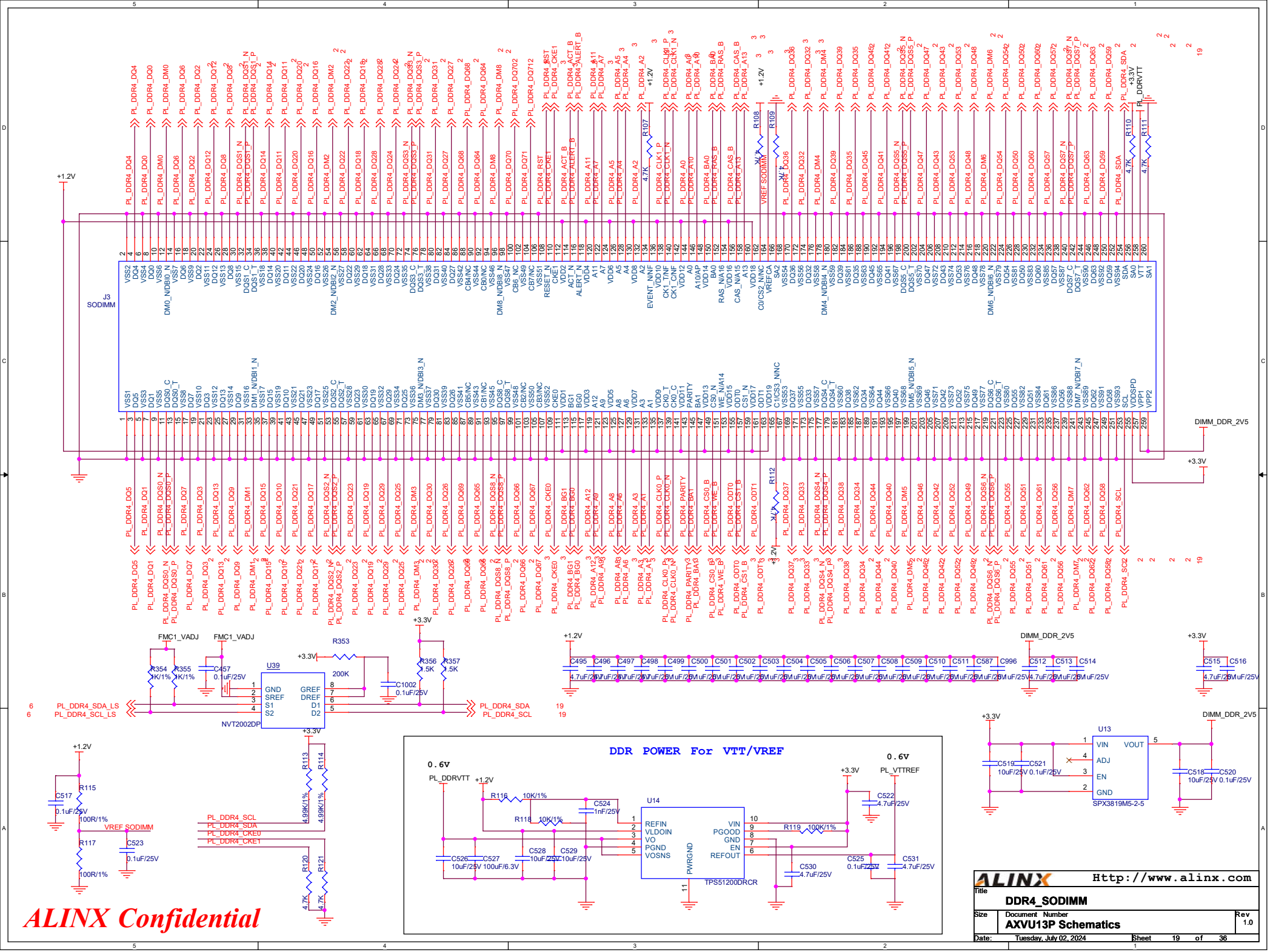

ALINX Confidential

ALINX Http://www.alinx.com

Title	DDR4_SODIMM
Size	Document Number: AXVU13P Schematics
Rev	1.0
Date:	Tuesday, July 02, 2024
Sheet	19 of 36

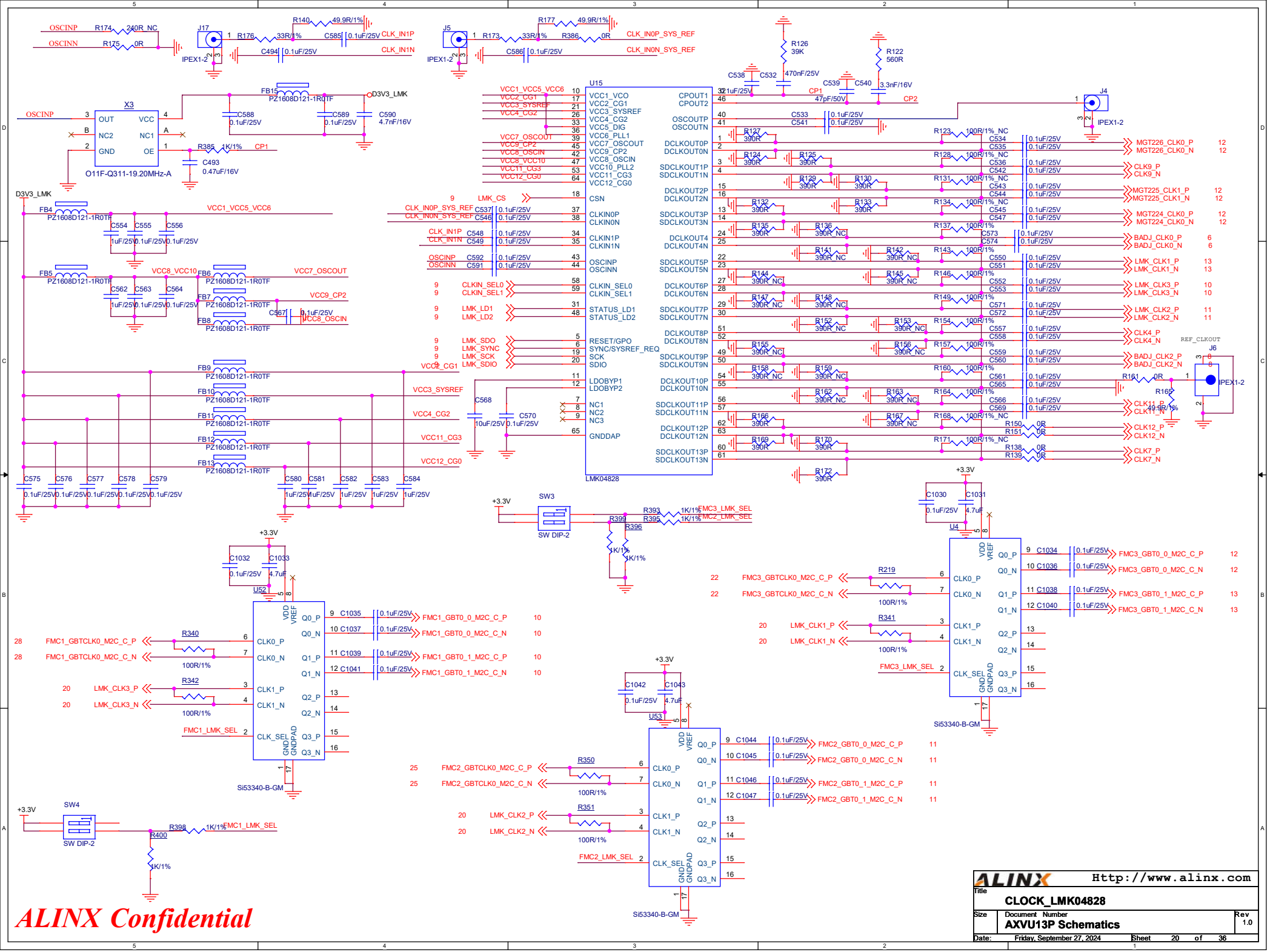
U15
LMK04828
X3
O11F-Q311-19.20MHz-A
J17
J5
J4
J6
IPEX1-2
U52
U53
U4
Si53340-B-GM
SW DIP-2
SW3
SW4
CLK_IN1P
CLK_IN1N
CLK_IN0P_SYS_REF
CLK_IN0N_SYS_REF
OSCINP
OSCINN
D3V3_LMK
VCC1_VCC5_VCC6
VCC7_OSCOUT
VCC8_VCC10
VCC9_CP2
VCC8_OSCIN
VCC3_SYSREF
VCC4_CG2
VCC11_CG3
VCC12_CG0
REF_CLKOUT
FMC1_GBTCLK0_M2C_C_P
FMC1_GBTCLK0_M2C_C_N
FMC1_GBT0_0_M2C_C_P
FMC1_GBT0_0_M2C_C_N
FMC1_GBT0_1_M2C_C_P
FMC1_GBT0_1_M2C_C_N
FMC1_LMK_SEL
FMC2_GBTCLK0_M2C_C_P
FMC2_GBTCLK0_M2C_C_N
FMC2_GBT0_0_M2C_C_P
FMC2_GBT0_0_M2C_C_N
FMC2_GBT0_1_M2C_C_P
FMC2_GBT0_1_M2C_C_N
FMC2_LMK_SEL
FMC3_GBTCLK0_M2C_C_P
FMC3_GBTCLK0_M2C_C_N
FMC3_GBT0_0_M2C_C_P
FMC3_GBT0_0_M2C_C_N
FMC3_GBT0_1_M2C_C_P
FMC3_GBT0_1_M2C_C_N
FMC3_LMK_SEL
LMK_CLK3_P
LMK_CLK3_N
LMK_CLK2_P
LMK_CLK2_N
LMK_CLK1_P
LMK_CLK1_N
MGT226_CLK0_P
MGT226_CLK0_N
CLK9_P
CLK9_N
MGT225_CLK1_P
MGT225_CLK1_N
MGT224_CLK0_P
MGT224_CLK0_N
BADJ_CLK0_P
BADJ_CLK0_N
LMK_CLK1_P
LMK_CLK1_N
LMK_CLK3_P
LMK_CLK3_N
LMK_CLK2_P
LMK_CLK2_N
CLK4_P
CLK4_N
BADJ_CLK2_P
BADJ_CLK2_N
CLK11_P
CLK11_N
CLK12_P
CLK12_N
CLK7_P
CLK7_N
LMK_CS
CLKIN_SEL0
CLKIN_SEL1
LMK_LD1
LMK_LD2
LMK_SDO
LMK_SYNC
LMK_SCK
LMK_SDIO
ALINX Confidential
ALINX Http://www.alinx.com
Title
CLOCK_LMK04828
Size
Document Number
AXVU13P Schematics
Rev
1.0
Date: Friday, September 27, 2024
Sheet 20 of 36

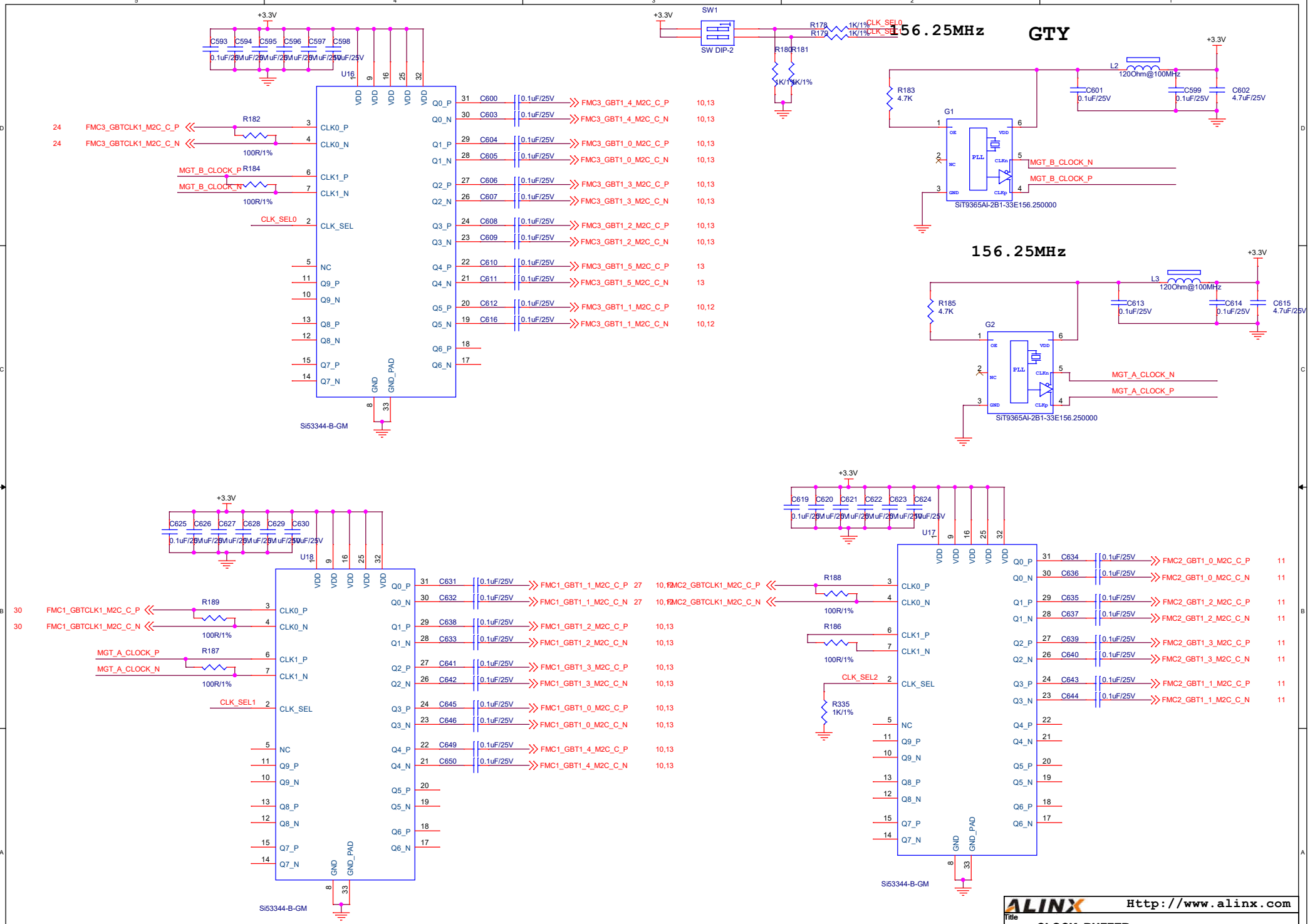

ALINX Confidential

ALINX Http://www.alinx.com

Title: CLOCK_BUFFER

Size | Document Number: AXVU13P Schematics | Rev 1.0

Date: Friday, September 27, 2024 | Sheet 21 of 36

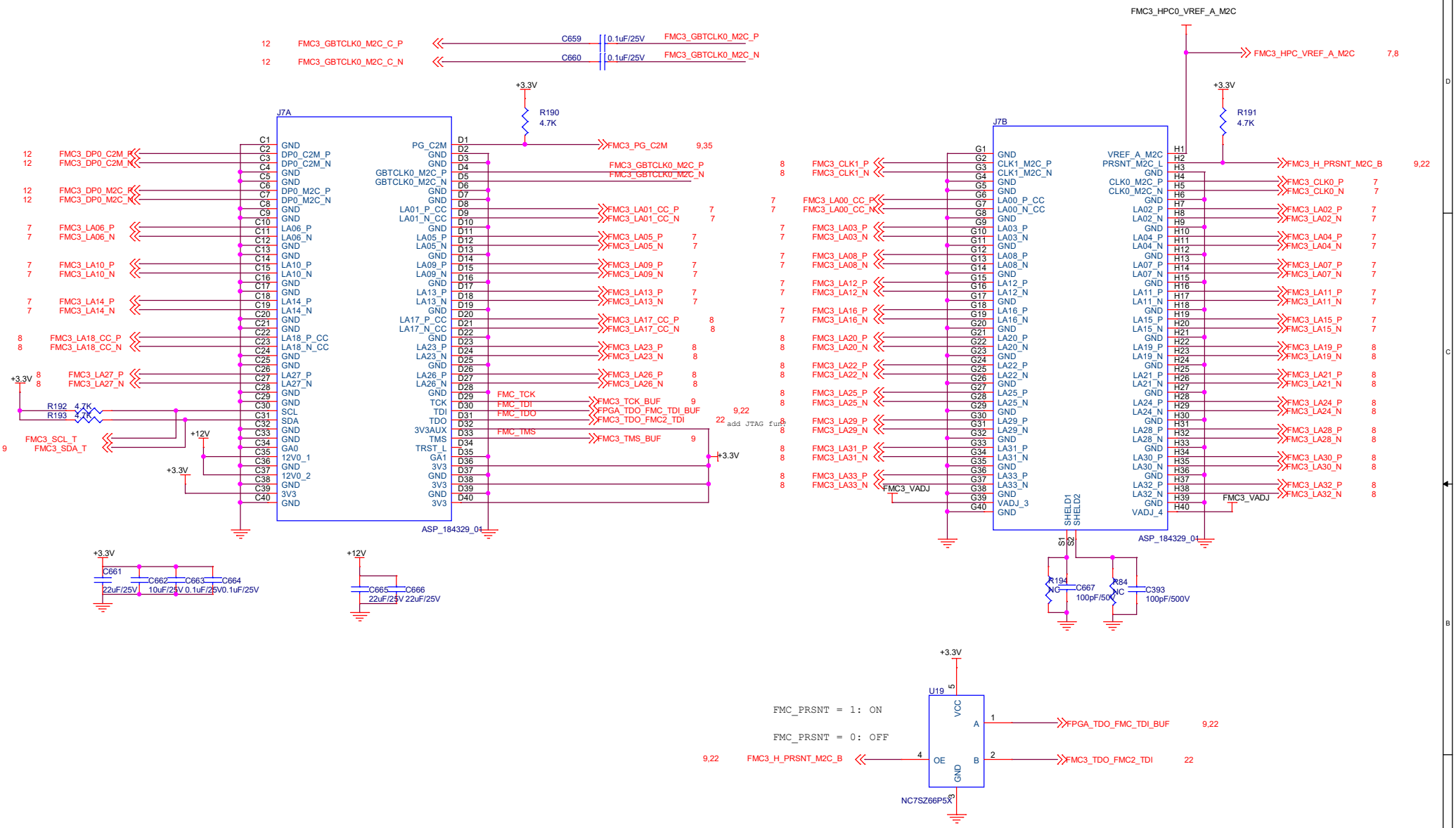

ALINX Confidential

ALINX	Http://www.alinx.com
Title	FMC3+_HPC_LA
Size / Document Number	AXVU13P Schematics
Rev	1.0
Date:	Monday, August 05, 2024
Sheet	22 of 36

ALINX Confidential

ALINX	Http://www.alinx.com
Title	FMC3+_HPC_HA_HB
Size	Document Number: AXVU13P Schematics
Rev	1.0
Date:	Monday, July 15, 2024
Sheet	23 of 36

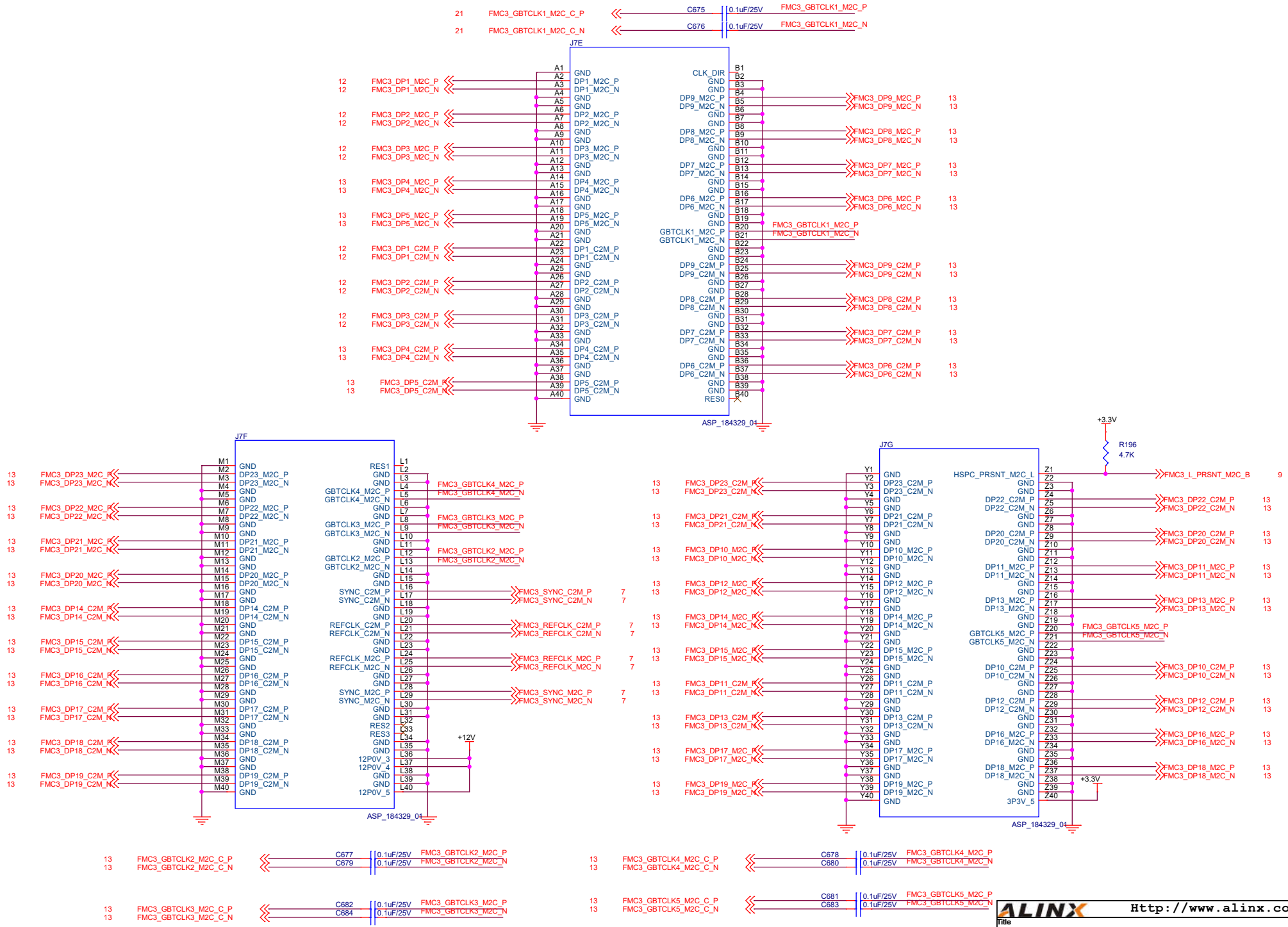
J7E
J7F
J7G
ASP_184329_01
C675 0.1uF/25V FMC3_GBTCLK1_M2C_P
C676 0.1uF/25V FMC3_GBTCLK1_M2C_N
FMC3_GBTCLK1_M2C_C_P
FMC3_GBTCLK1_M2C_C_N
FMC3_DP1_M2C_P
FMC3_DP1_M2C_N
FMC3_DP2_M2C_P
FMC3_DP2_M2C_N
FMC3_DP3_M2C_P
FMC3_DP3_M2C_N
FMC3_DP4_M2C_P
FMC3_DP4_M2C_N
FMC3_DP5_M2C_P
FMC3_DP5_M2C_N
FMC3_DP1_C2M_P
FMC3_DP1_C2M_N
FMC3_DP2_C2M_P
FMC3_DP2_C2M_N
FMC3_DP3_C2M_P
FMC3_DP3_C2M_N
FMC3_DP4_C2M_P
FMC3_DP4_C2M_N
FMC3_DP5_C2M_P
FMC3_DP5_C2M_N
FMC3_DP9_M2C_P
FMC3_DP9_M2C_N
FMC3_DP8_M2C_P
FMC3_DP8_M2C_N
FMC3_DP7_M2C_P
FMC3_DP7_M2C_N
FMC3_DP6_M2C_P
FMC3_DP6_M2C_N
FMC3_GBTCLK1_M2C_P
FMC3_GBTCLK1_M2C_N
FMC3_DP9_C2M_P
FMC3_DP9_C2M_N
FMC3_DP8_C2M_P
FMC3_DP8_C2M_N
FMC3_DP7_C2M_P
FMC3_DP7_C2M_N
FMC3_DP6_C2M_P
FMC3_DP6_C2M_N
FMC3_DP23_M2C_P
FMC3_DP23_M2C_N
FMC3_DP22_M2C_P
FMC3_DP22_M2C_N
FMC3_DP21_M2C_P
FMC3_DP21_M2C_N
FMC3_DP20_M2C_P
FMC3_DP20_M2C_N
FMC3_DP14_C2M_P
FMC3_DP14_C2M_N
FMC3_DP15_C2M_P
FMC3_DP15_C2M_N
FMC3_DP16_C2M_P
FMC3_DP16_C2M_N
FMC3_DP17_C2M_P
FMC3_DP17_C2M_N
FMC3_DP18_C2M_P
FMC3_DP18_C2M_N
FMC3_DP19_C2M_P
FMC3_DP19_C2M_N
FMC3_GBTCLK4_M2C_P
FMC3_GBTCLK4_M2C_N
FMC3_GBTCLK3_M2C_P
FMC3_GBTCLK3_M2C_N
FMC3_GBTCLK2_M2C_P
FMC3_GBTCLK2_M2C_N
FMC3_SYNC_C2M_P
FMC3_SYNC_C2M_N
FMC3_REFCLK_C2M_P
FMC3_REFCLK_C2M_N
FMC3_REFCLK_M2C_P
FMC3_REFCLK_M2C_N
FMC3_SYNC_M2C_P
FMC3_SYNC_M2C_N
+12V
+3.3V
R196
4.7K
FMC3_L_PRSNT_M2C_B
FMC3_GBTCLK5_M2C_P
FMC3_GBTCLK5_M2C_N
FMC3_DP10_M2C_P
FMC3_DP10_M2C_N
FMC3_DP12_M2C_P
FMC3_DP12_M2C_N
FMC3_DP11_M2C_P
FMC3_DP11_M2C_N
FMC3_DP13_M2C_P
FMC3_DP13_M2C_N
FMC3_DP22_C2M_P
FMC3_DP22_C2M_N
FMC3_DP20_C2M_P
FMC3_DP20_C2M_N
FMC3_DP10_C2M_P
FMC3_DP10_C2M_N
FMC3_DP12_C2M_P
FMC3_DP12_C2M_N
FMC3_DP16_M2C_P
FMC3_DP16_M2C_N
FMC3_DP18_M2C_P
FMC3_DP18_M2C_N
C677 0.1uF/25V FMC3_GBTCLK2_M2C_P
C679 0.1uF/25V FMC3_GBTCLK2_M2C_N
C678 0.1uF/25V FMC3_GBTCLK4_M2C_P
C680 0.1uF/25V FMC3_GBTCLK4_M2C_N
C682 0.1uF/25V FMC3_GBTCLK3_M2C_P
C684 0.1uF/25V FMC3_GBTCLK3_M2C_N
C681 0.1uF/25V FMC3_GBTCLK5_M2C_P
C683 0.1uF/25V FMC3_GBTCLK5_M2C_N
FMC3_GBTCLK2_M2C_C_P
FMC3_GBTCLK2_M2C_C_N
FMC3_GBTCLK4_M2C_C_P
FMC3_GBTCLK4_M2C_C_N
FMC3_GBTCLK3_M2C_C_P
FMC3_GBTCLK3_M2C_C_N
FMC3_GBTCLK5_M2C_C_P
FMC3_GBTCLK5_M2C_C_N
ALINX Http://www.alinx.com
Title
FMC3+_HPC_DP
Size
Document Number
AXVU13P Schematics
Rev
1.0
Date: Monday, July 15, 2024
Sheet 24 of 36
ALINX Confidential

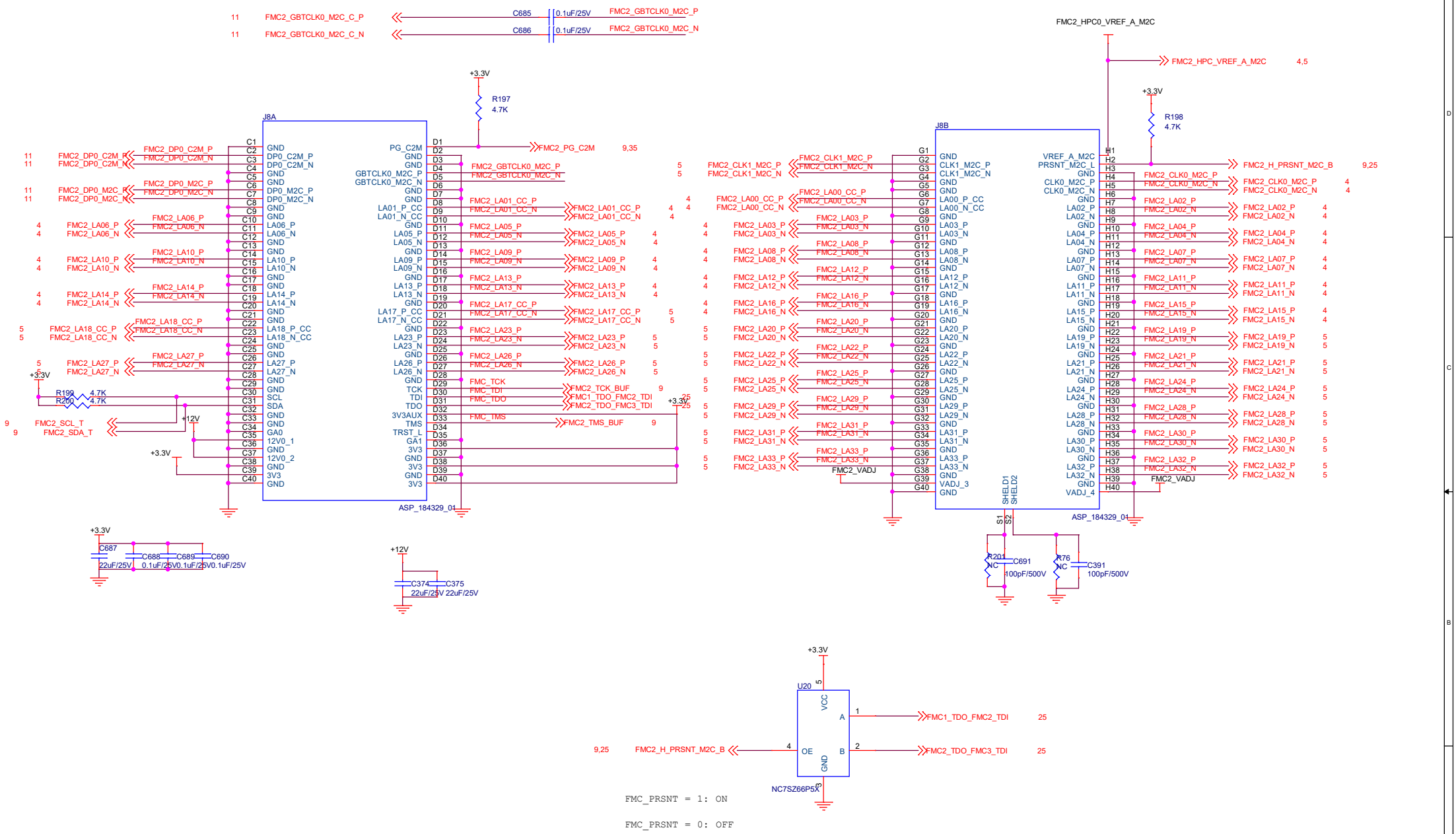

ALINX Confidential

ALINX	Http://www.alinx.com
Title	FMC2+_HPC_LA
Size / Document Number	AXVU13P Schematics
Rev	1.0
Date:	Tuesday, July 02, 2024
Sheet	25 of 36

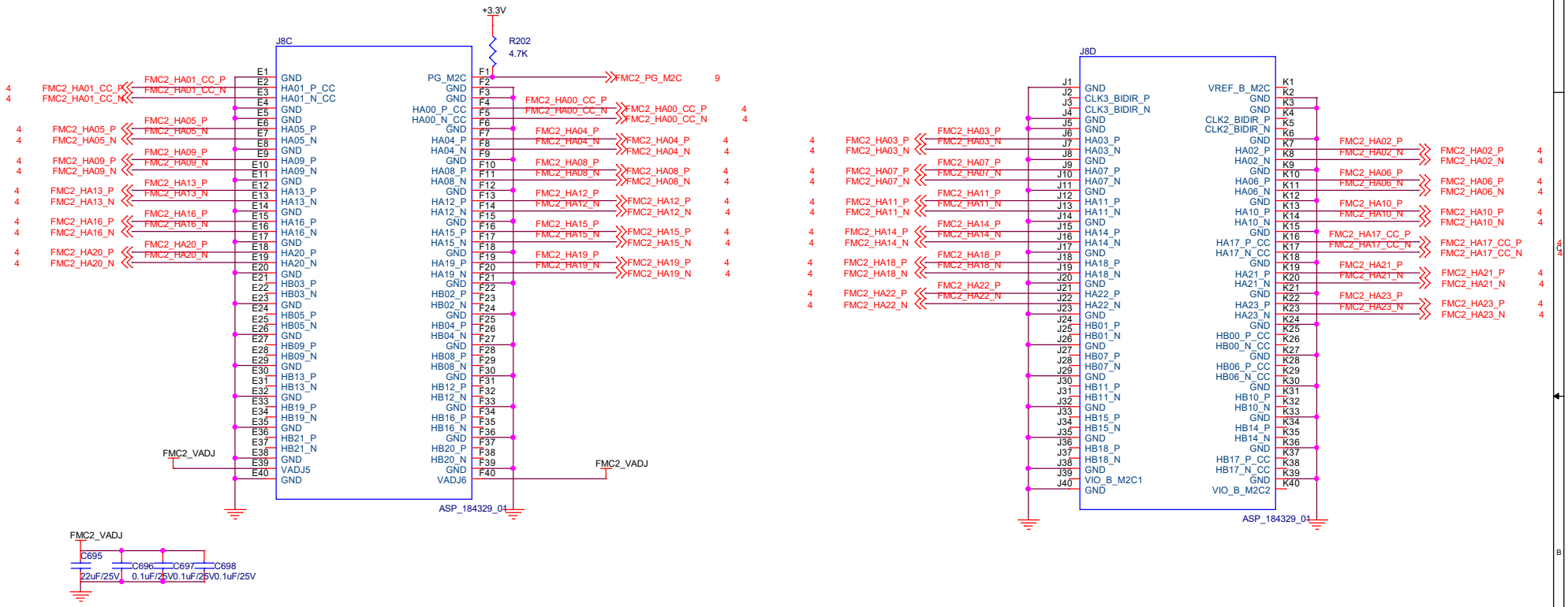

ALINX Confidential

ALINX	Http://www.alinx.com
Title	FMC2+_HPC_HA_HB
Size / Document Number	AXVU13P Schematics
Rev	1.0
Date: Tuesday, July 02, 2024	Sheet 26 of 36

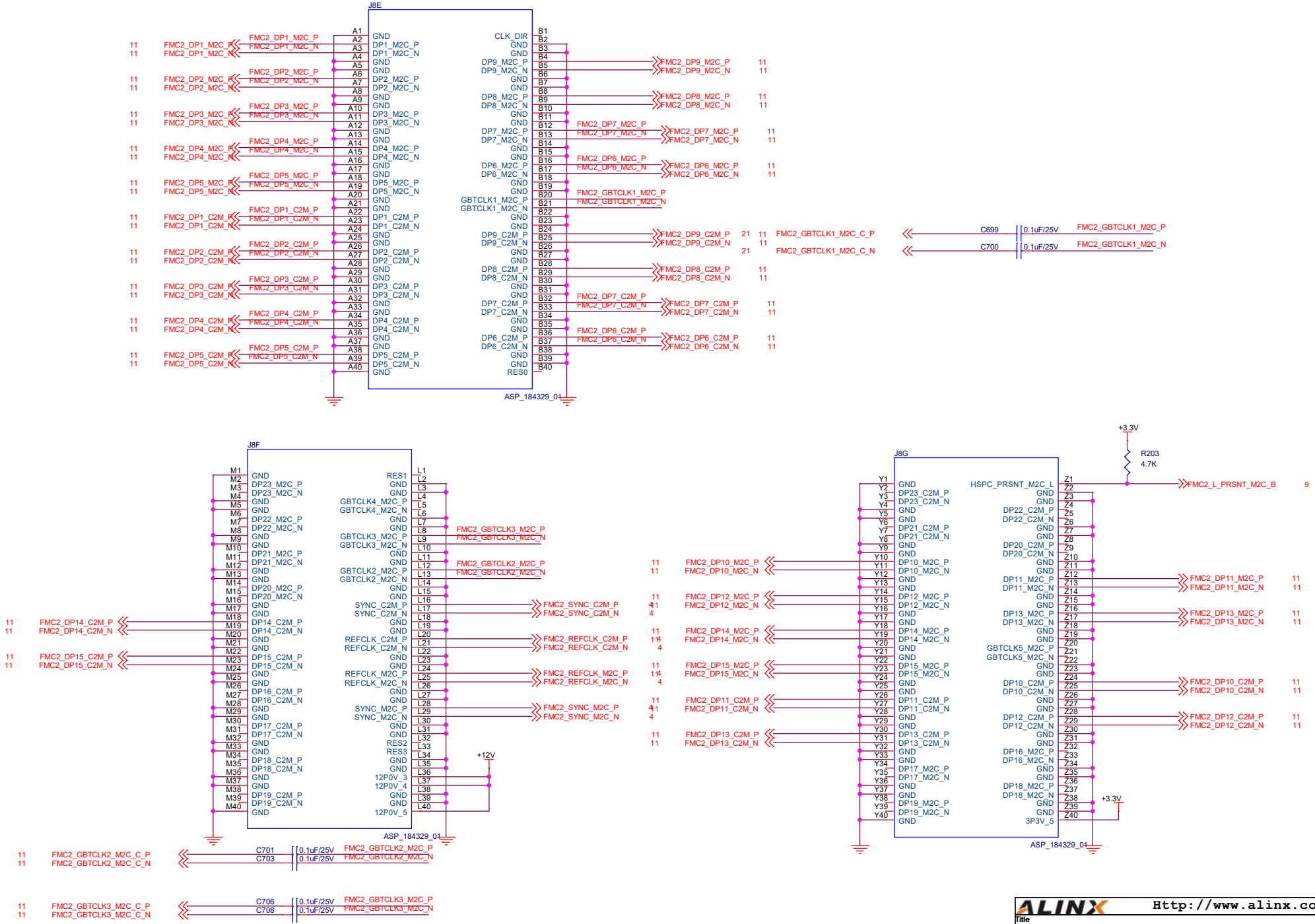

ALINX Confidential

ALINX Http://www.alinx.com

Title: FMC2+_HPC_DP

Size | Document Number: AXVU13P Schematics | Rev: 1.0

Date: Tuesday, July 02, 2024 | Sheet 27 of 36

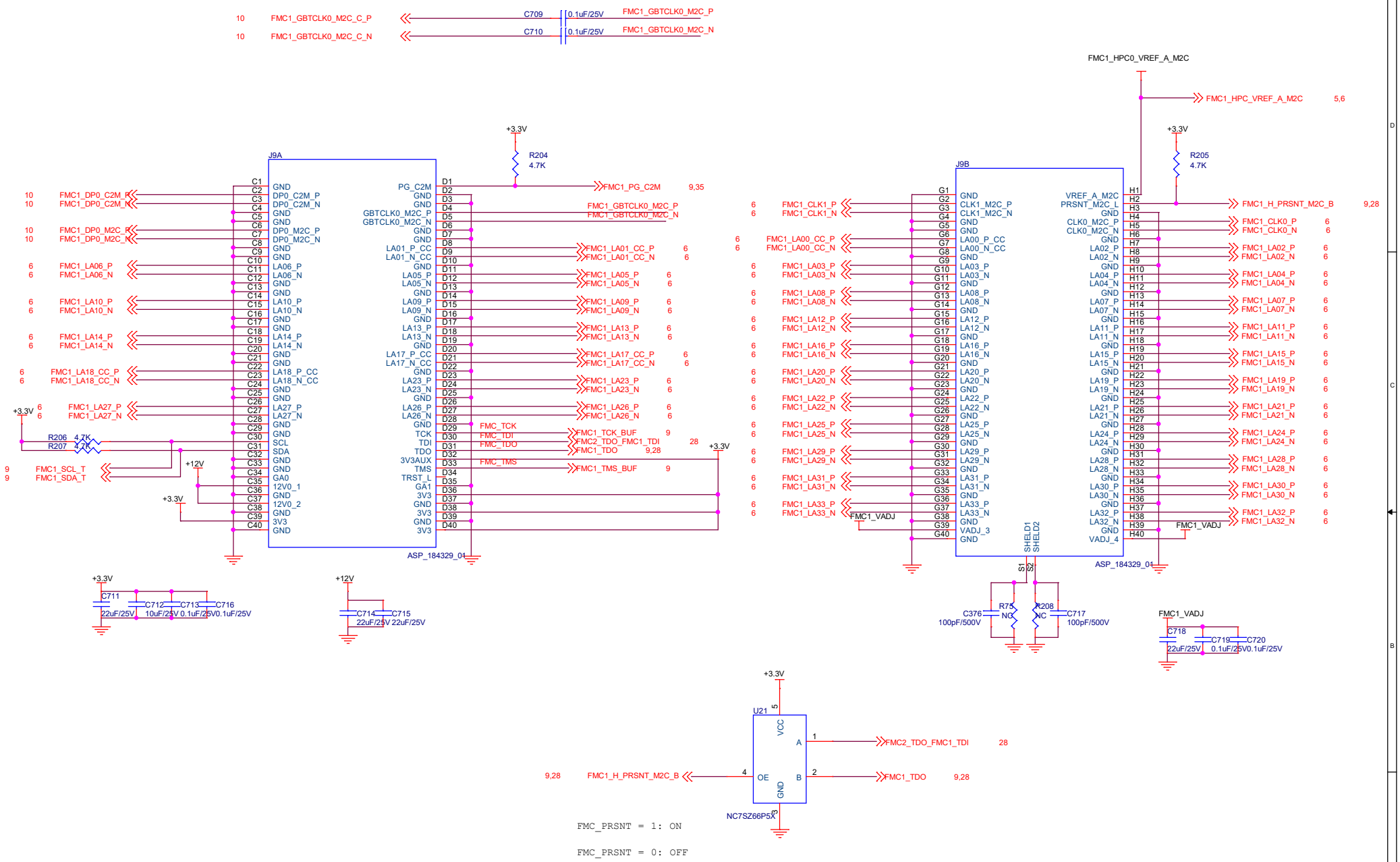

ALINX Confidential

ALINX	Http://www.alinx.com
Title	FMC1+_HPC_LA
Size / Document Number	AXVU13P Schematics
Rev	1.0
Date: Friday, September 27, 2024	Sheet 28 of 36

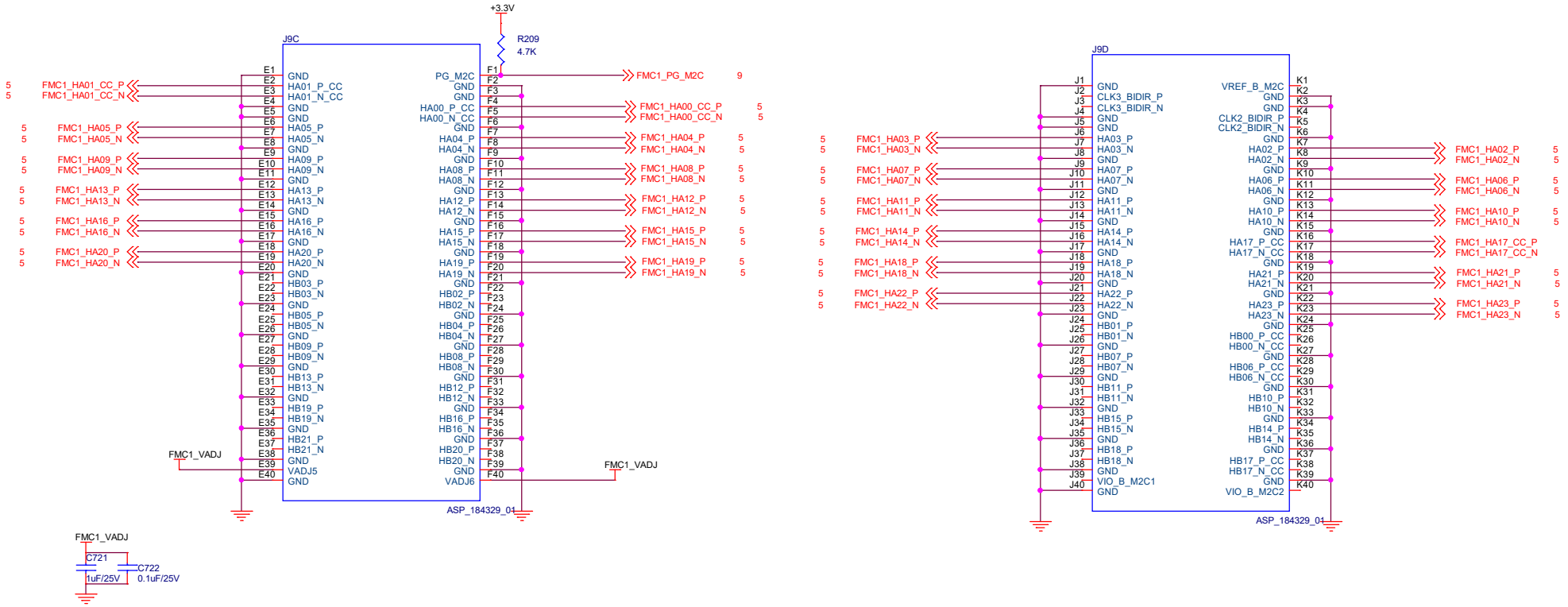

ALINX Confidential

ALINX	Http://www.alinx.com
Title	FMC1+_HPC_HA_HB
Size	Document Number: AXVU13P Schematics
Rev	1.0
Date:	Monday, July 15, 2024
Sheet	29 of 36

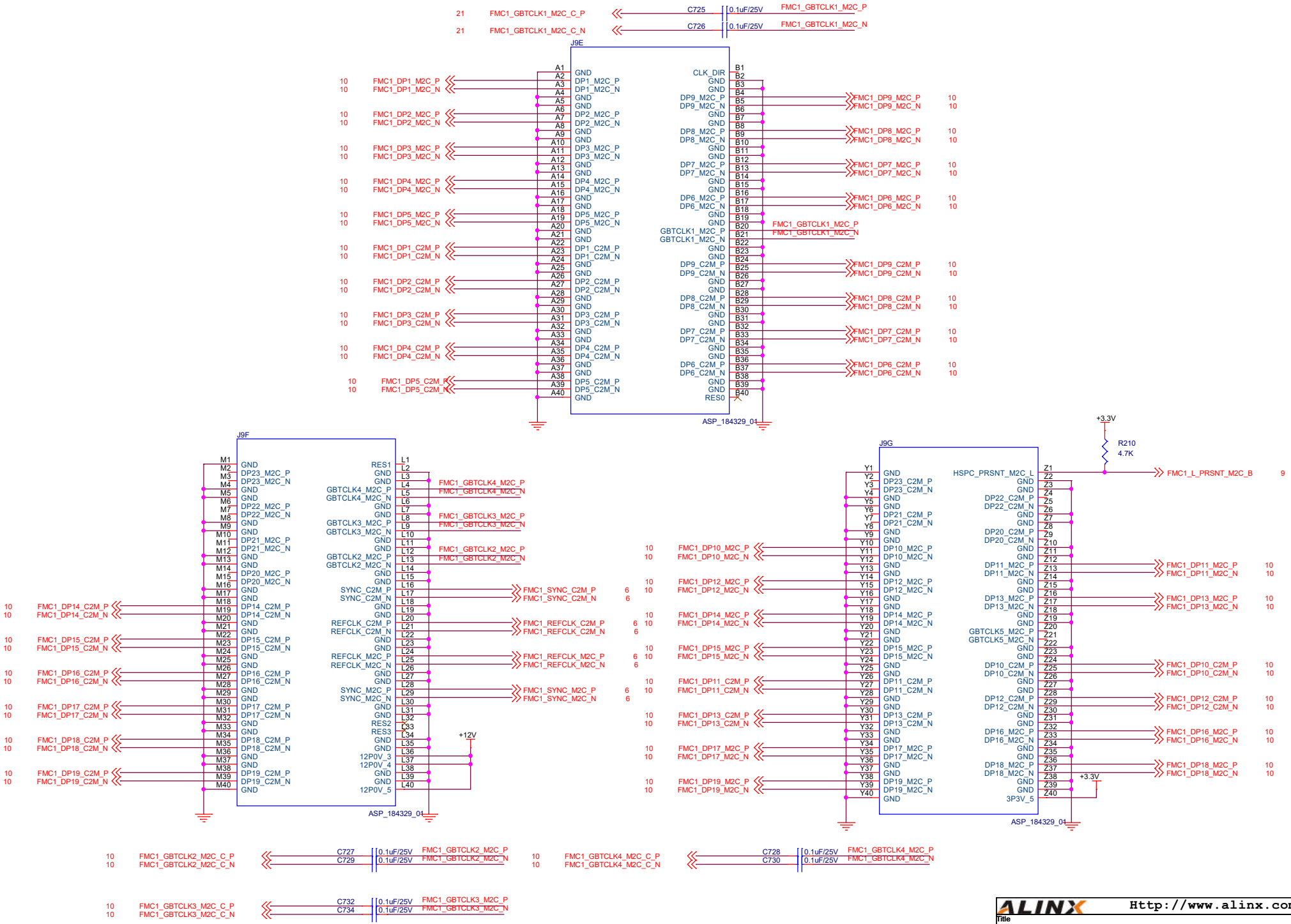

ALINX Confidential

ALINX	Http://www.alinx.com
Title	FMC1+_HPC_DP
Size / Document Number	AXVU13P Schematics
Rev	1.0
Date:	Monday, July 15, 2024
Sheet	30 of 36

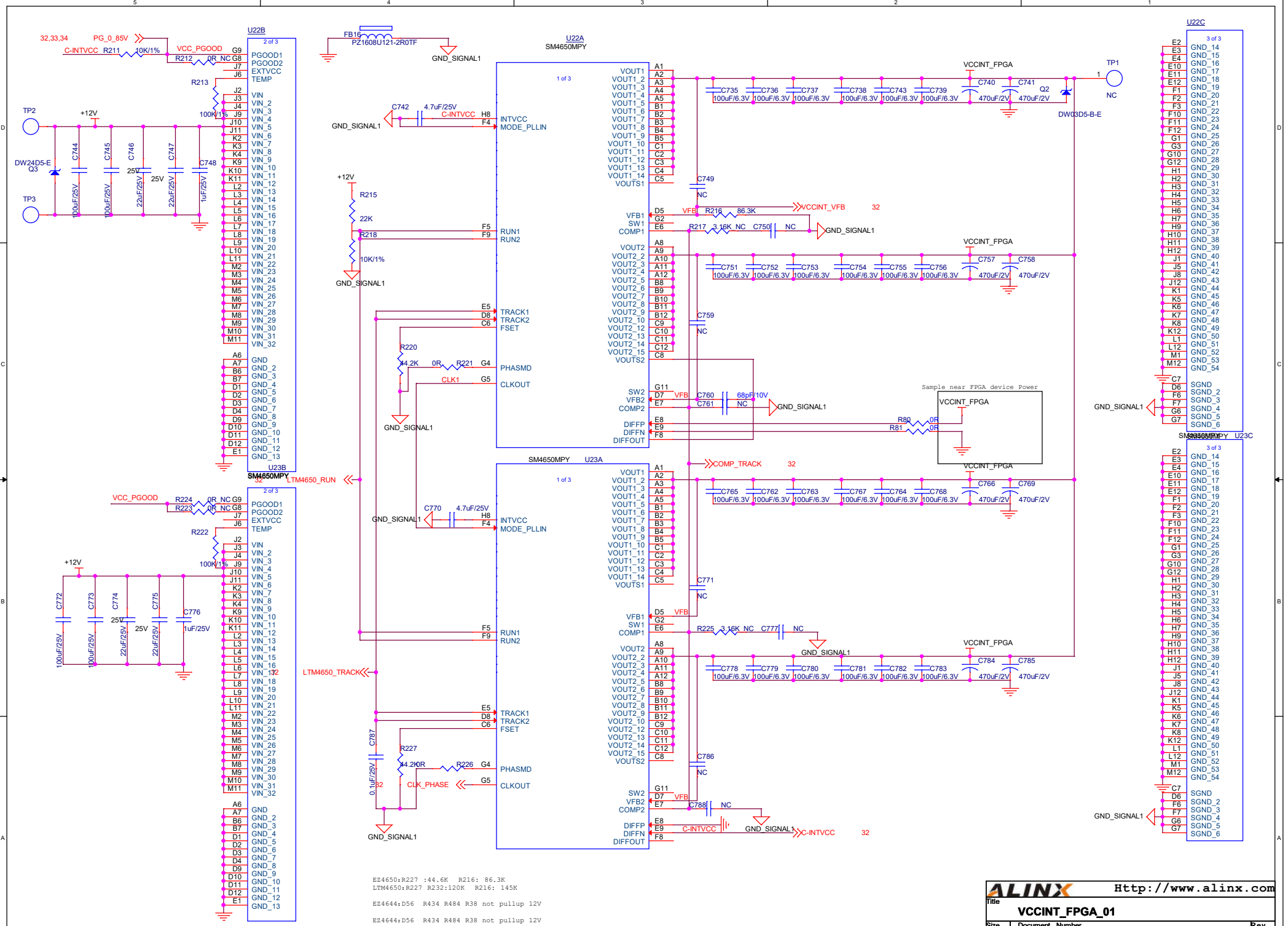
U22B
U22A
U22C
U23A
U23B
U23C
SM4650MPY
FB16
PZ1608U121-2R0TF
GND_SIGNAL1
VCCINT_FPGA
VCCINT_VFB
COMP_TRACK
LTM4650_RUN
LTM4650_TRACK
CLK_PHASE
C-INTVCC
VCC_PGOOD
PG_0_85V
TP1
TP2
TP3
DW03D5-B-E
DW24D5-E
Sample near FPGA device Power
EZ4650:R227 :44.6K R216: 86.3K
LTM4650:R227 R232:120K R216: 145K
EZ4644:D56 R434 R484 R38 not pullup 12V
EZ4644:D56 R434 R484 R38 not pullup 12V
ALINX Confidential
ALINX Http://www.alinx.com
Title
VCCINT_FPGA_01
Size
Document Number
AXVU13P Schematics
Rev
1.0
Date: Tuesday, July 02, 2024
Sheet 31 of 36

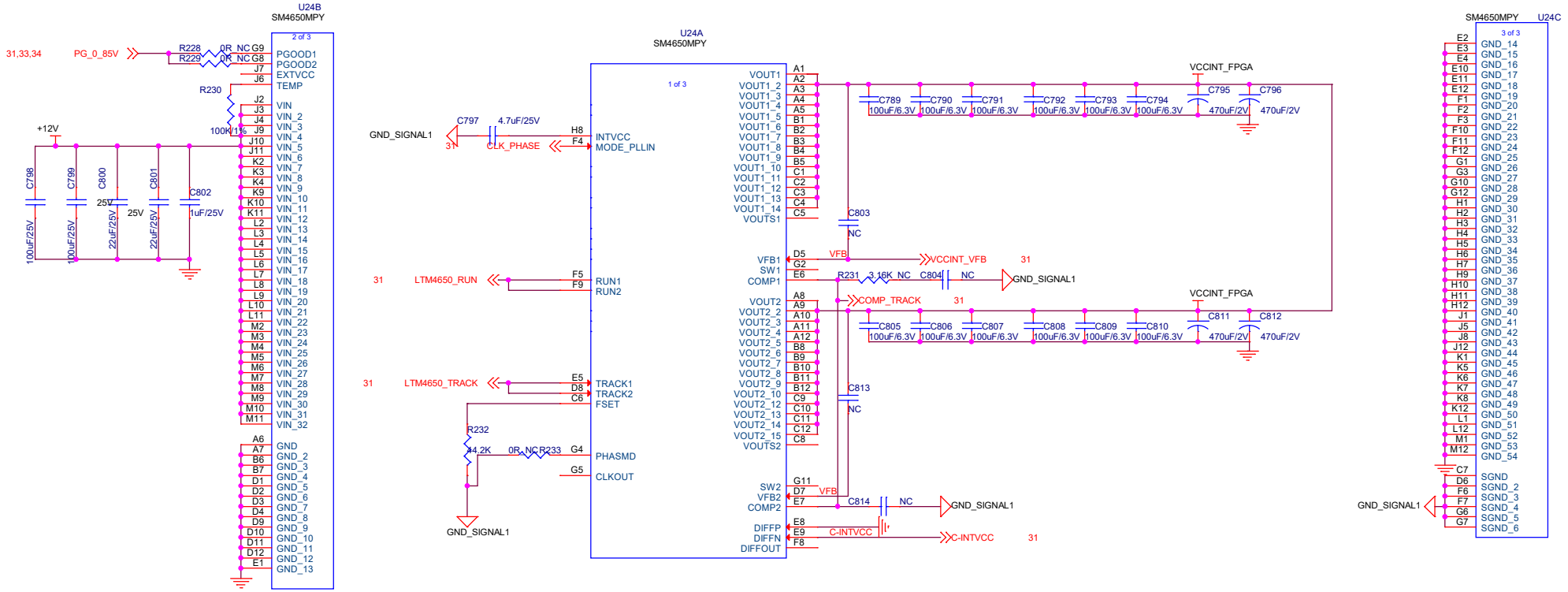

ALINX Http://www.alinx.com

Title: VCCINT_FPGA_02

Size | Document Number: AXVU13P Schematics | Rev 1.0

Date: Tuesday, July 02, 2024 | Sheet 32 of 36

ALINX Confidential

+1.2V for DDR4@6A

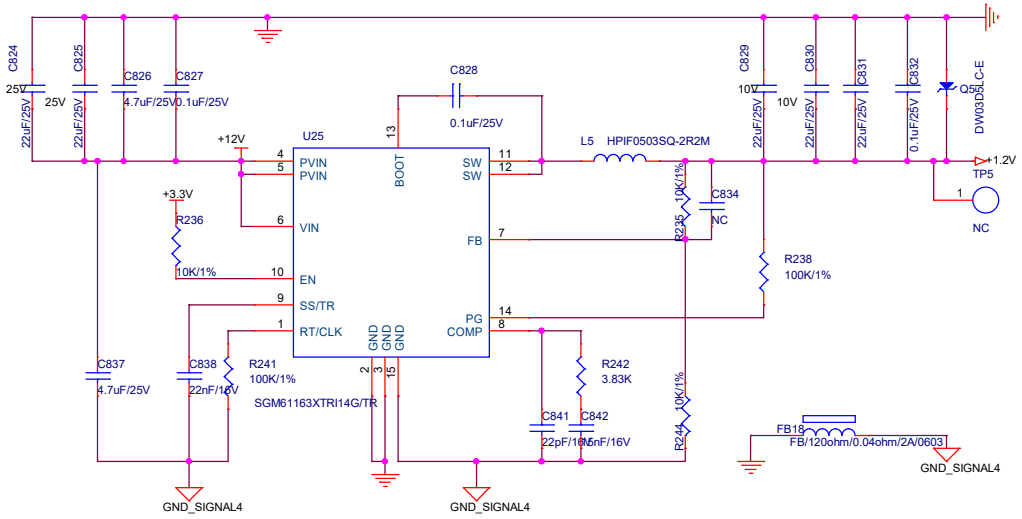

Vout=0.6x (1 + R1/R2)

VCCAUX is 1.8V@4A

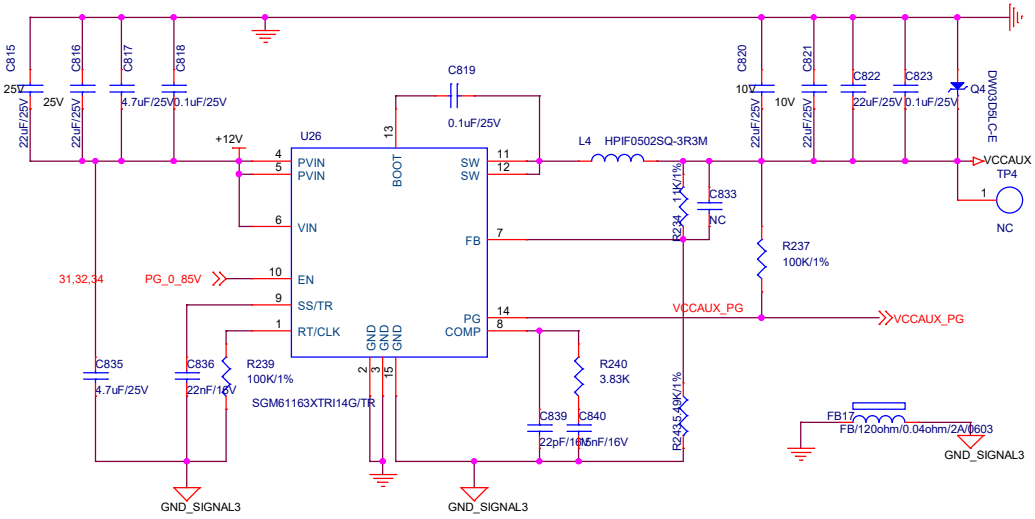

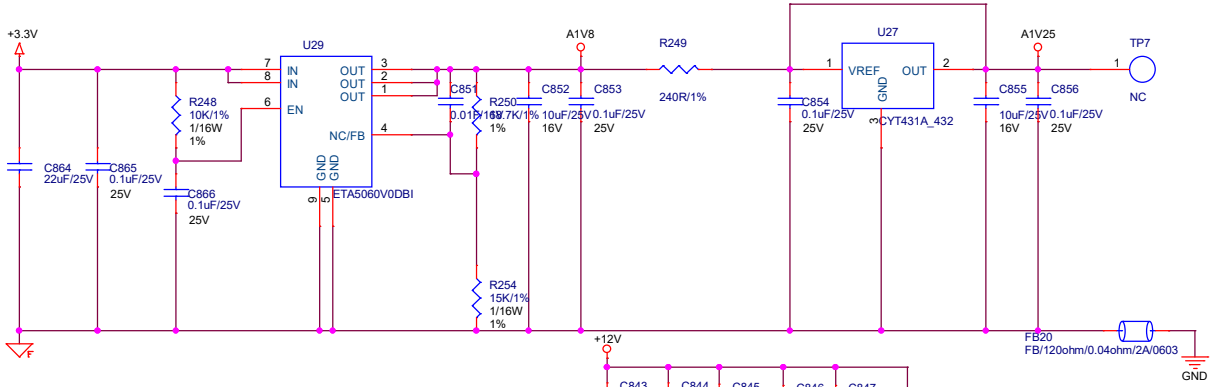

VCCIO0:VCC1V8_FPGA

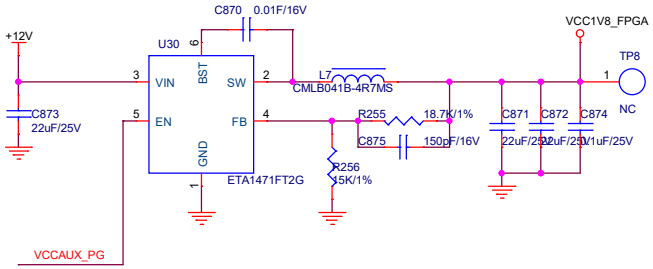

3.3V@12A

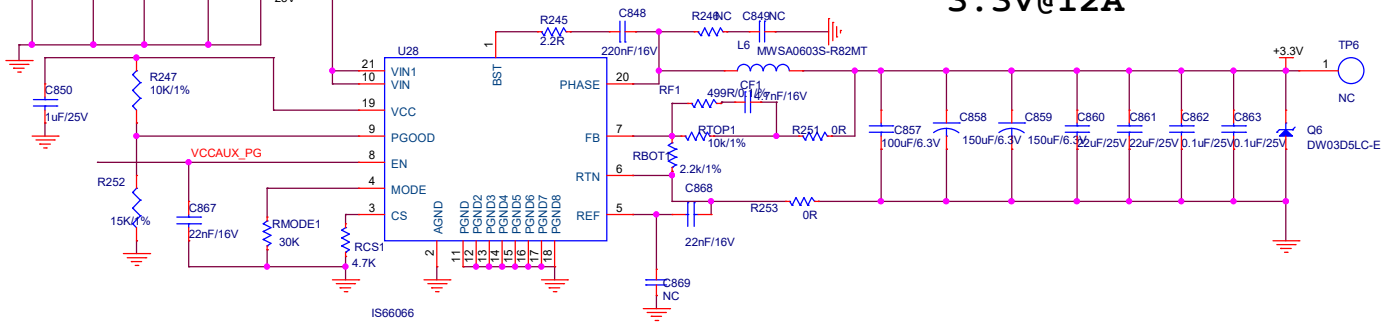

ALINX Confidential

ALINX	Http://www.alinx.com	
Title	VCCIO&1V2	
Size	Document Number: AXVU13P Schematics	Rev 1.0
Date: Tuesday, July 02, 2024	Sheet 33 of 36	

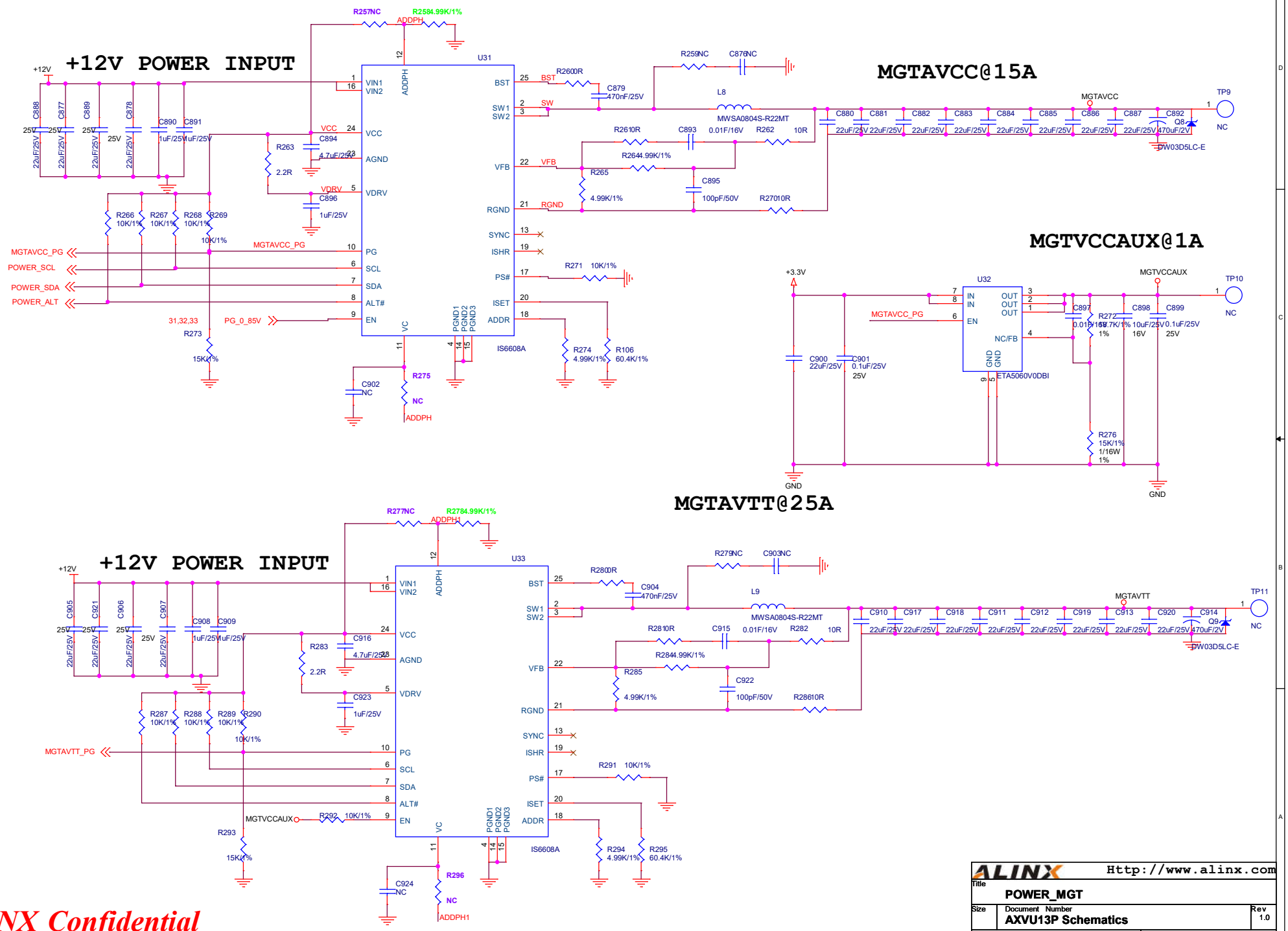

ALINX Confidential

ALINX	Http://www.alinx.com
Title	POWER_MGT
Size	Document Number: AXVU13P Schematics
Rev	1.0
Date:	Tuesday, July 02, 2024
Sheet	34 of 36

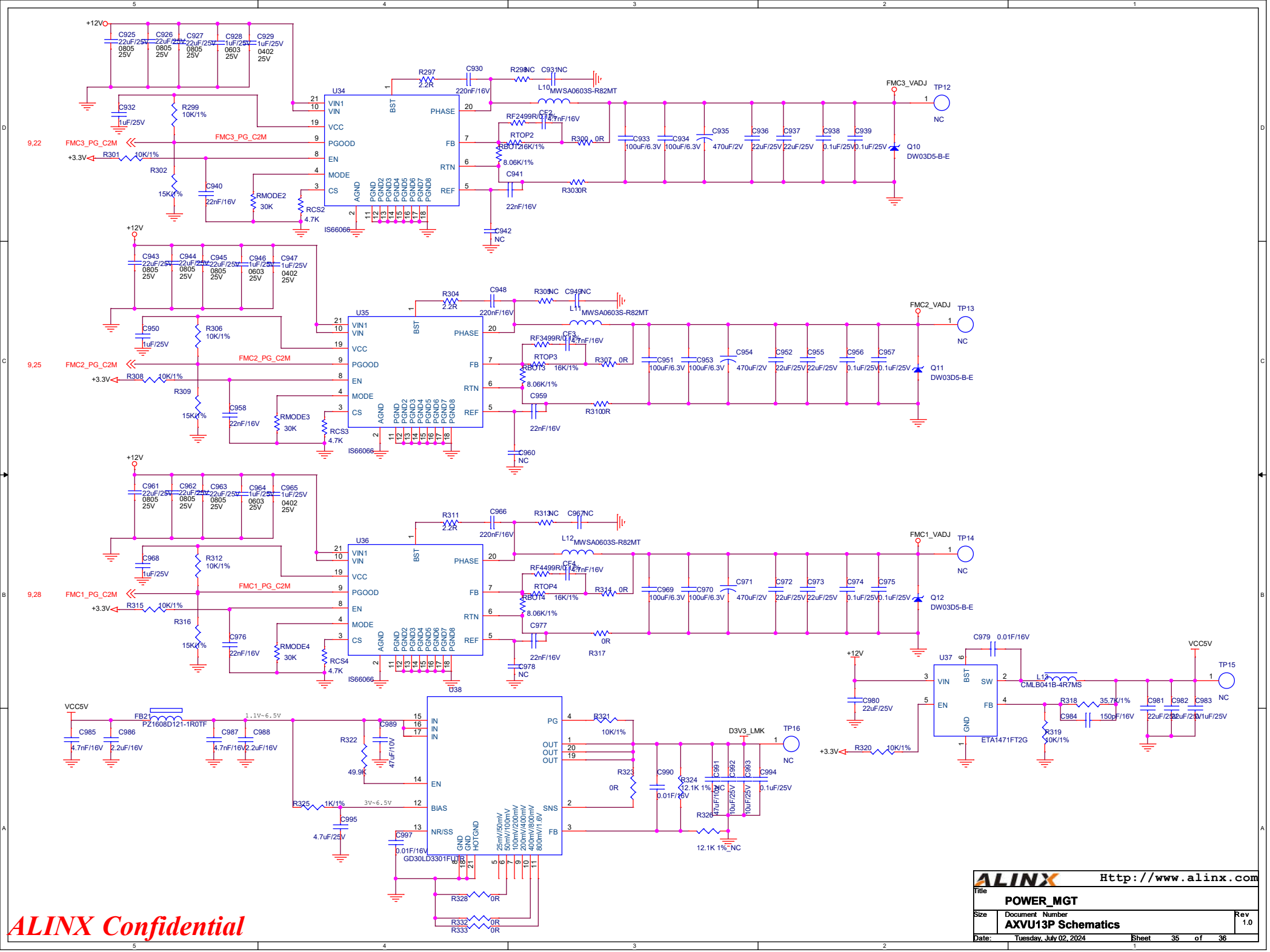
U34
IS66066
FMC3_PG_C2M
FMC3_VADJ
TP12
Q10
DW03D5-B-E
U35
FMC2_PG_C2M
FMC2_VADJ
TP13
Q11
DW03D5-B-E
U36
FMC1_PG_C2M
FMC1_VADJ
TP14
Q12
DW03D5-B-E
U37
ETA1471FT2G
VCC5V
TP15
U38
GD30LD3301FUR
D3V3_LMK
TP16
ALINX Confidential
ALINX Http://www.alinx.com
Title
POWER_MGT
Size
Document Number
AXVU13P Schematics
Rev
1.0
Date: Tuesday, July 02, 2024
Sheet 35 of 36

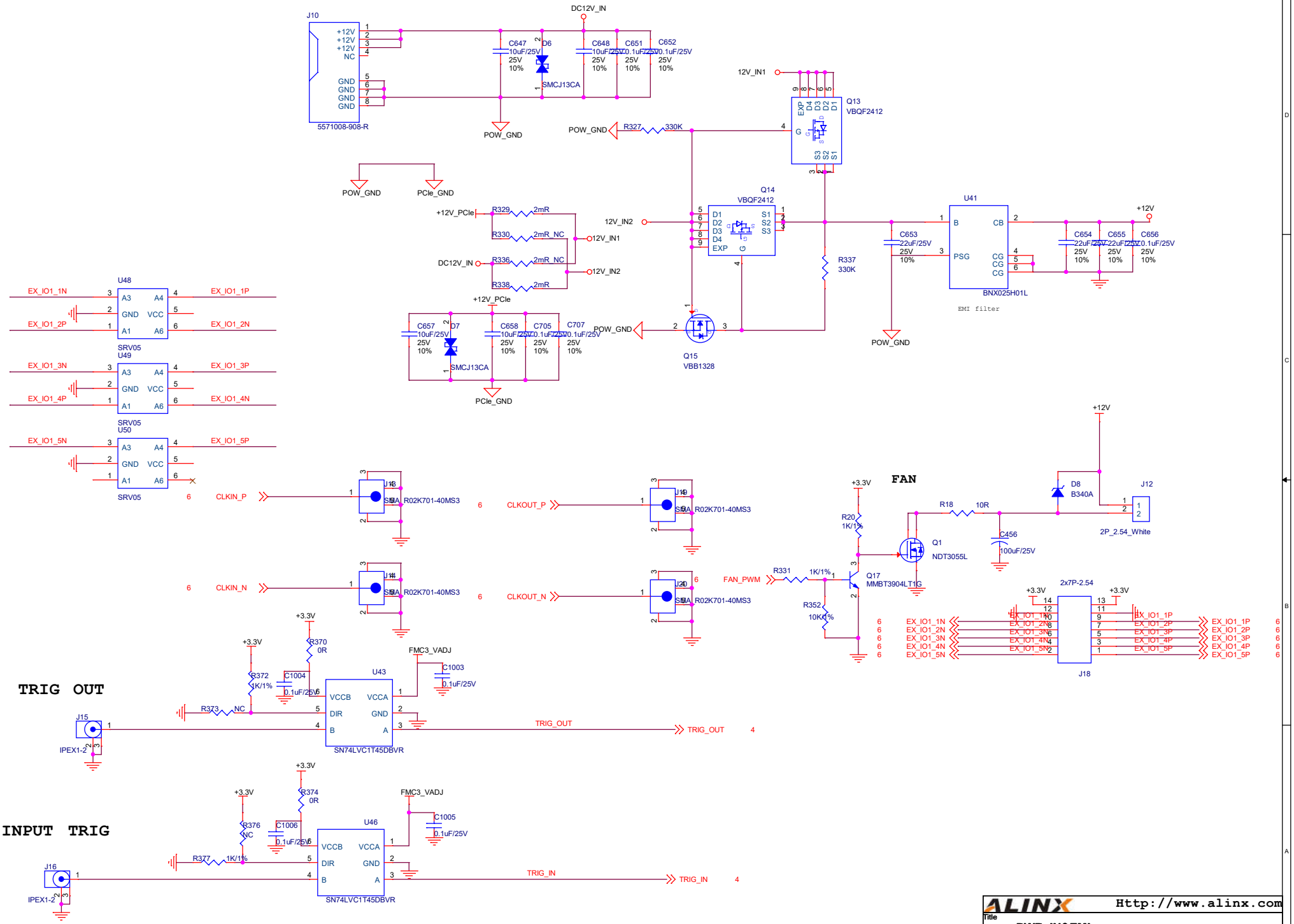

ALINX Confidential

ALINX Http://www.alinx.com

Title	PWR_IN&EMI
Size	Document Number: AXVU13P Schematics
Rev	1.0
Date:	Tuesday, July 02, 2024
Sheet	36 of 36