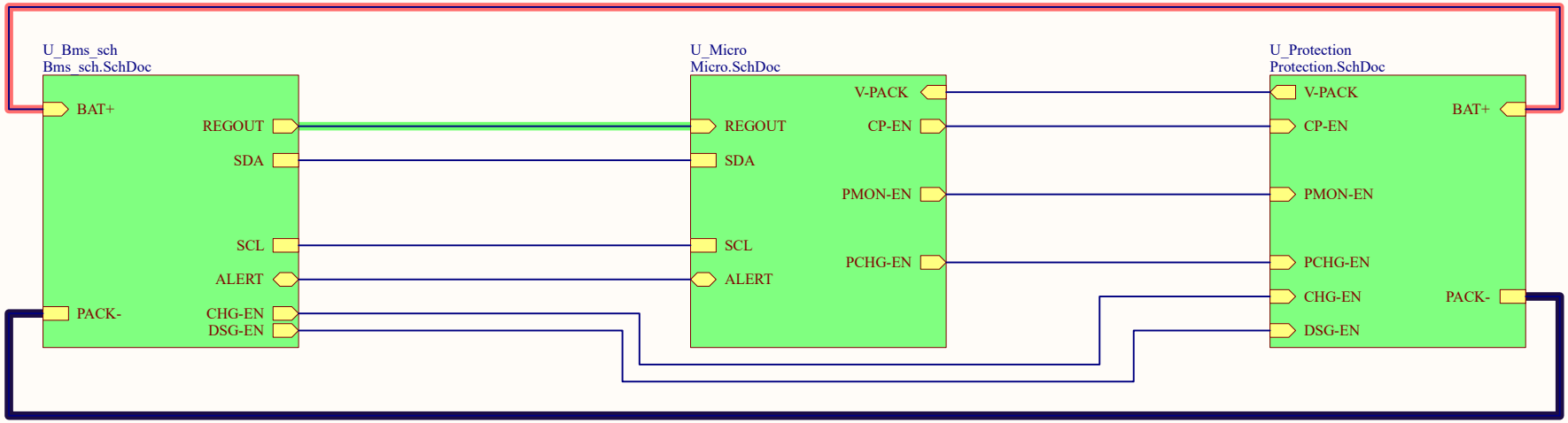

Title			
Size A4	Number		Revision
Date: 1/12/2026		Sheet of	
File: C:\Users\..\Top-Sch.SchDoc		Drawn By:	

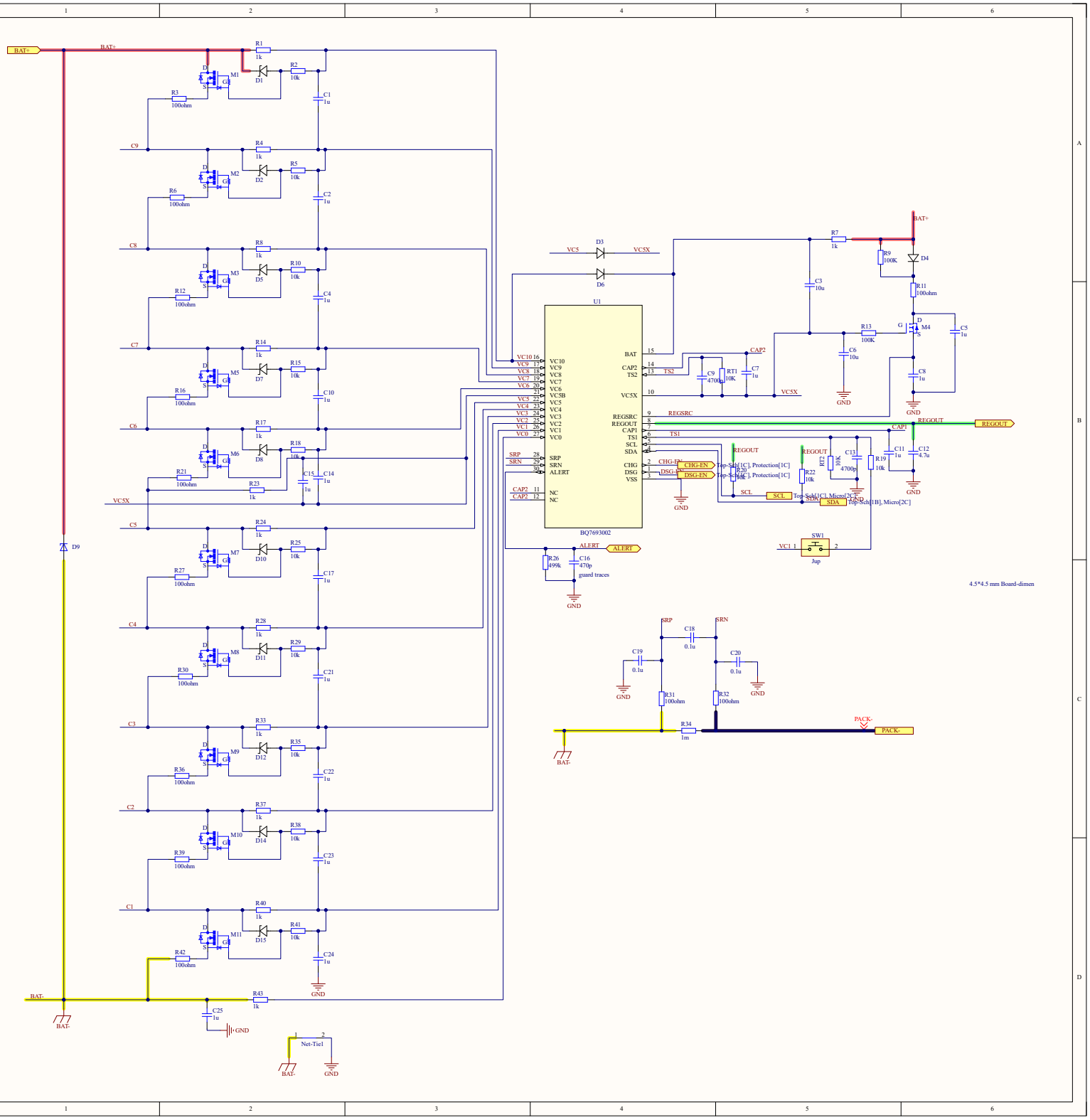

BAT+
BAT-
VC5X
VC5
VC5X
U1
BQ7693002
VC10
VC9
VC8
VC7
VC6
VC5B
VC5
VC4
VC3
VC2
VC1
VC0
SRP
SRN
ALERT
NC
BAT
CAP2
TS2
REGSRC
REGOUT
CAP1
TS1
SCL
SDA
CHG
DSG
VSS
CHG-EN
DSG-EN
REGOUT
SCL
SDA
ALERT
GND
SW1
Jup
4.5*4.5 mm Board-dimen
SRP
SRN
PACK-
Net-Tie1

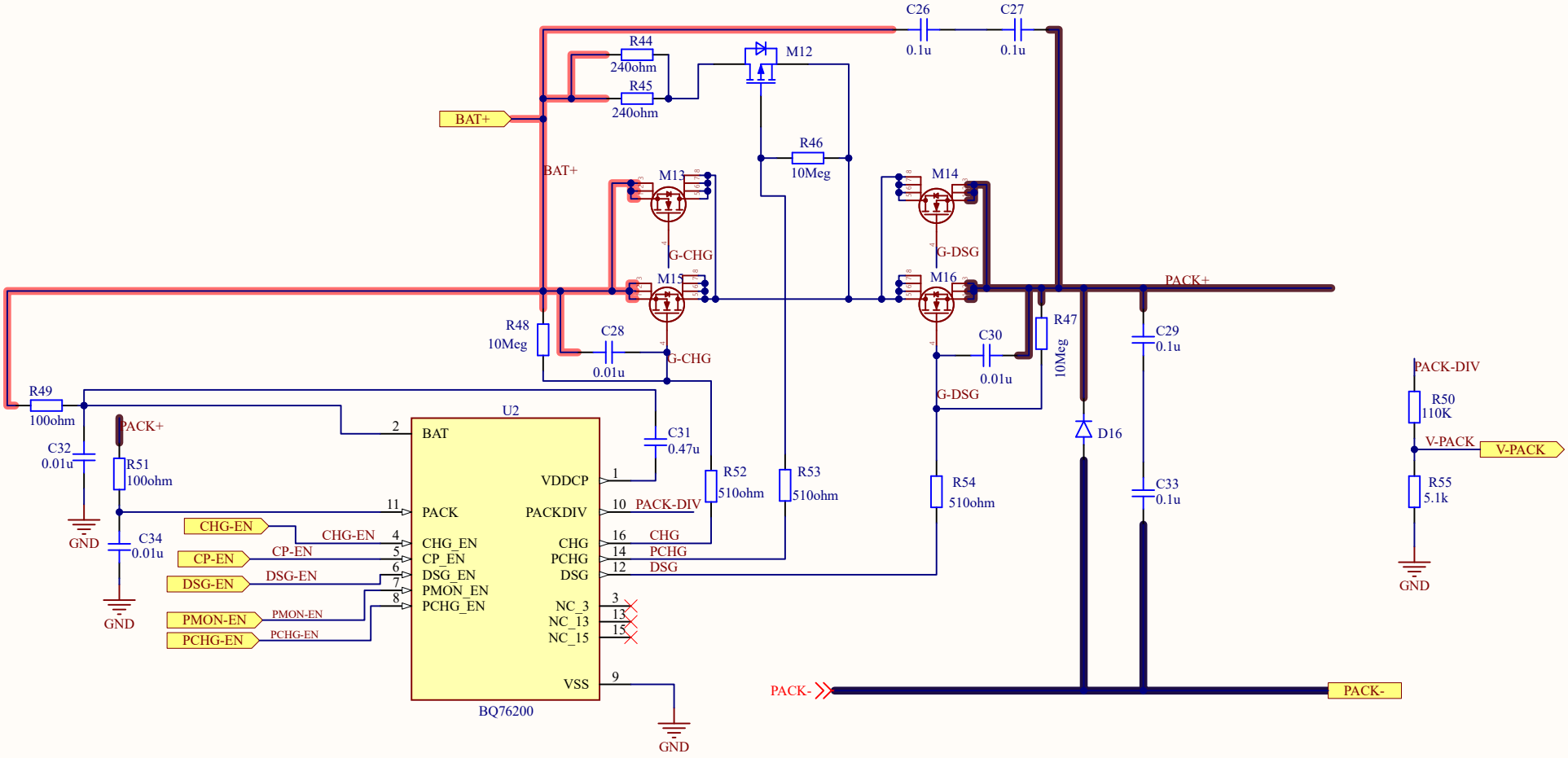

Title		
Size A4	Number	Revision
Date: 1/12/2026		Sheet of
File: C:\Users\..\Protection.SchDoc		Drawn By:

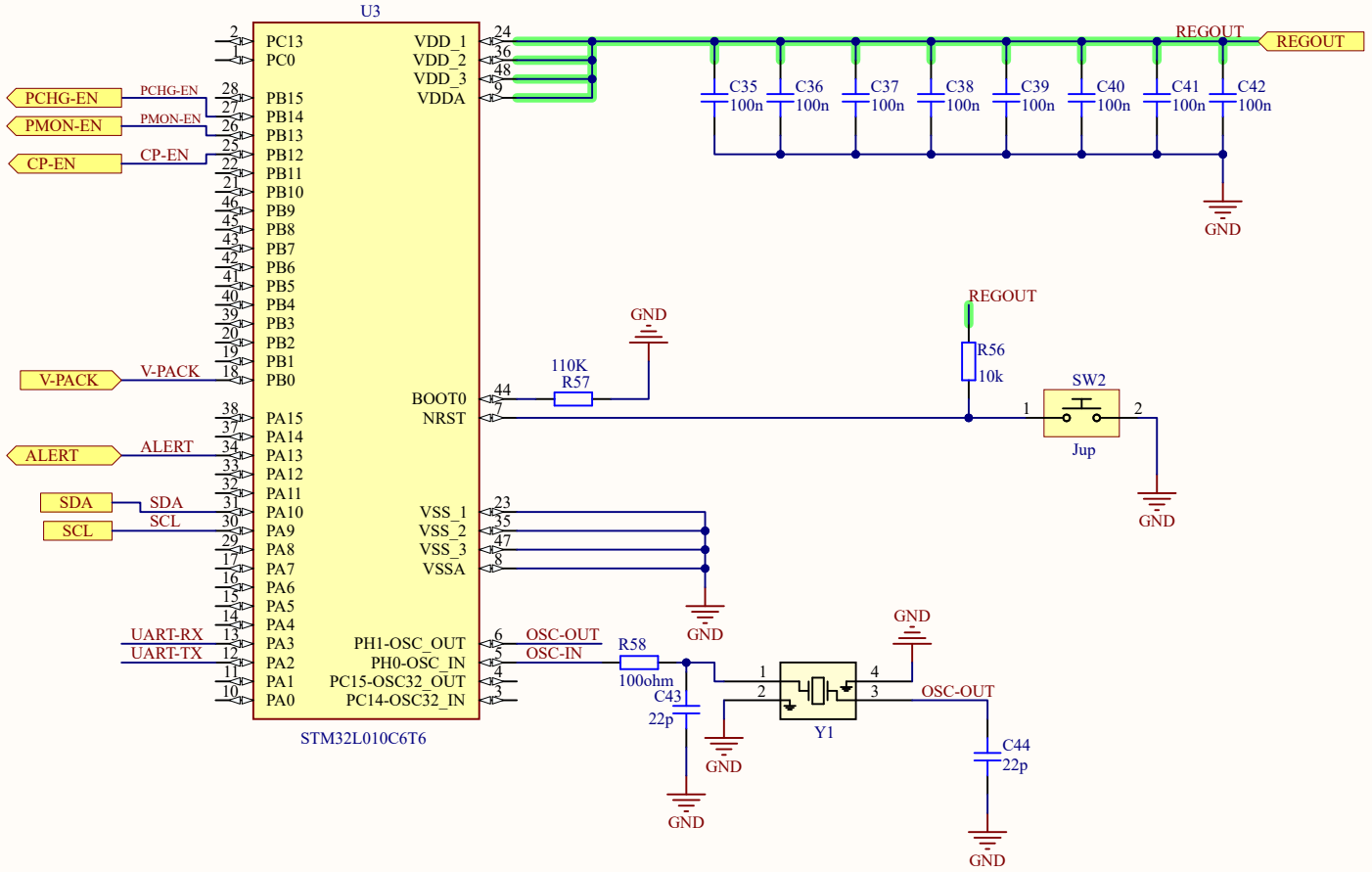

Title		
Size A4	Number	Revision
Date: 1/12/2026		Sheet of
File: C:\Users\..\Micro.SchDoc		Drawn By: