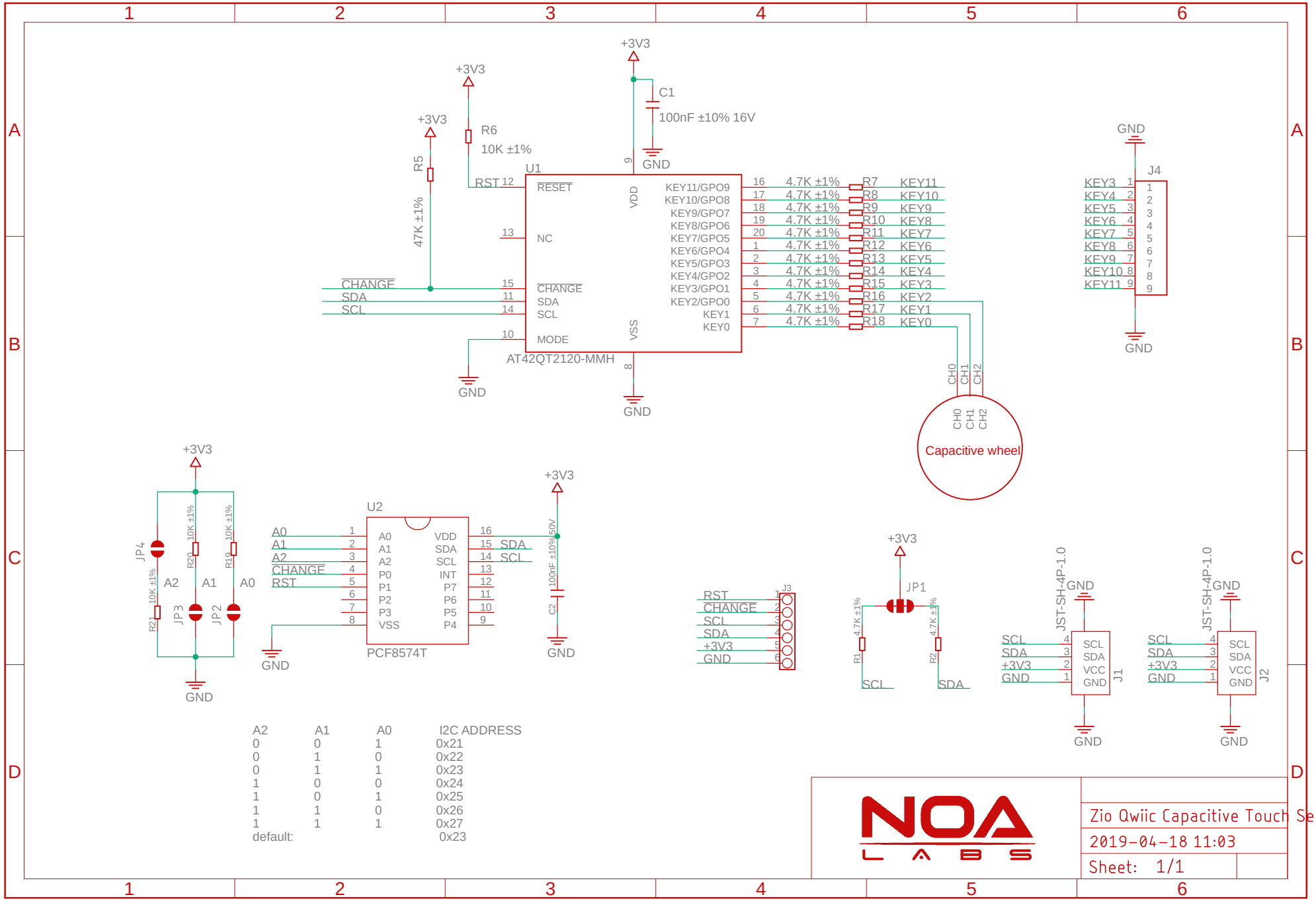

A2	A1	A0	I2C ADDRESS
0	0	1	0x21
0	1	0	0x22
0	1	1	0x23
1	0	0	0x24
1	0	1	0x25
1	1	0	0x26
1	1	1	0x27
default:			0x23

Zio Qwiic Capacitive Touch Sensor AT42QT2120

2019-04-18 11:03

Sheet: 1/1