Choose Language (Translated by google)

How to install, wiring and debug the 3d touch

Install the Bltouch to the print head of the 3d printer

Install the Bltouch module on the hotend housing, we make a print stl file, please print it and then install the Bltouch on the hotend.

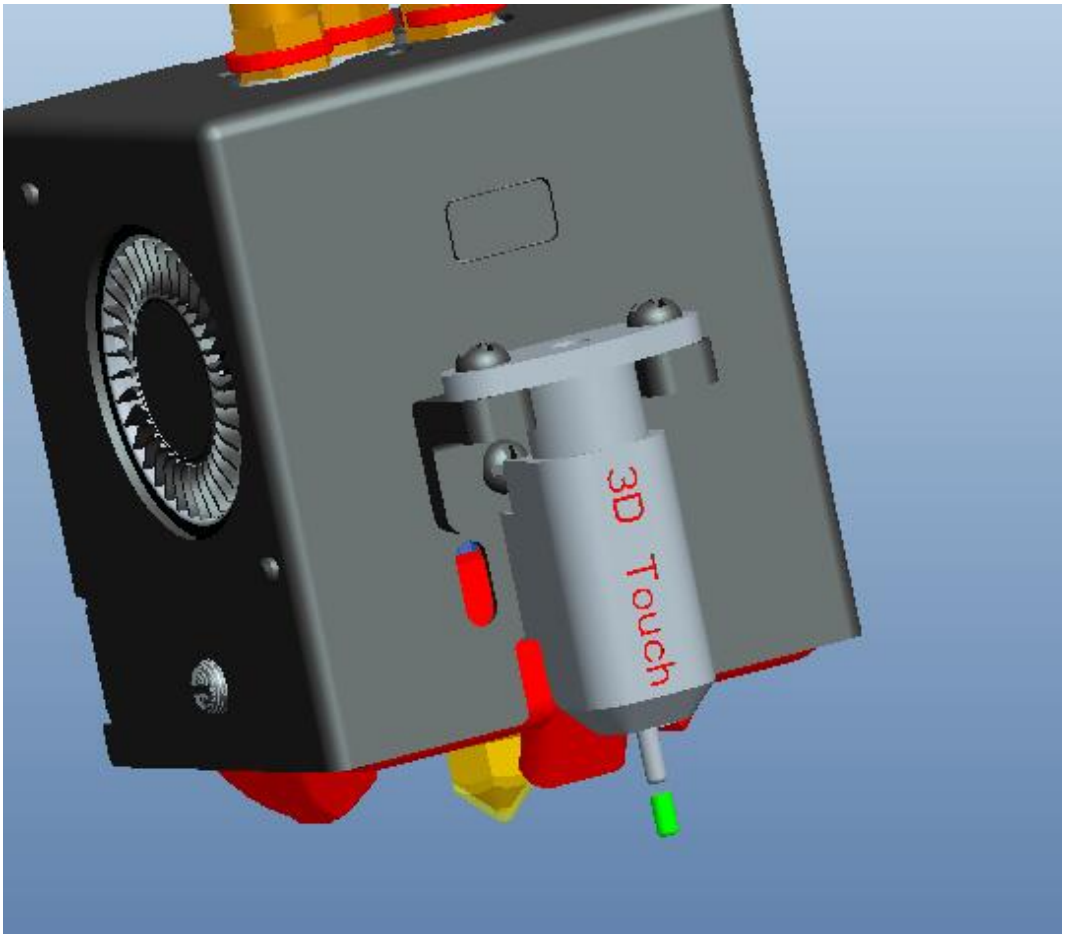

:arrow_downPK□□□���□���%V��y�
N���^□�□���BLtouch_Bracket.STL��□�U���□"��k,�X�0#F�X�□#s□□ □(□bC%6□ *(W*
□MĠ&□b���%□□□fx□36T□WDA□1□□□□□□k□□F□□>□□□□□□□ف□^.>□□g□□□□□9□Δ□□□

U🞐7🞐🞐1🞐O🞐🞐□🞐uN🞐Ŵ O□+🞐🞐wj🞐🞐□}O🞐,🞐🞐🞐Cj🞐Z🞐{.🞐🞐🞐🞐□6iB6□🞐e}hH🞐b,🞐🞐🞐$9🞐"c🞐X
🞐□M🞐🞐b🞐🞐🞐<🞐X🞐+🞐!c 🞐🞐🞐🞐□m7🞐□🞐}🞐&"🞐!🞐🞐Z□{ 🞐2U🞐□i🞐□t🞐Ub🞐Ú4🞐4OL□}
🞐X🞐r🞐🞐🞐4O🞐🞐🞐k🞐_□🞐lb□🞐□C7🞐"ƒ□1M🞐"4K🞐🞐🞐 🞐Ɣn0🞐🞐, 🞐□□ 🞐🞐ᵑ_🞐B🞐'🞐-A🞐🞐MToI🞐o
🞐🞐7🞐🞐🞐7C>🞐\>🞐□(🞐ww🞐?🞐e□_🞐🞐DC🞐🞐X🞐i🞐} 🞐🞐🞐🞐□z%ϟ\ 🞐%Y🞐🞐🞐🞐🞐ή 🞐xs□
🞐S🞐🞐4🞐□$P🞐🞐J🞐🞐🞐|□🞐🞐🞐🞐🞐Fƒ_□🞐L□ 🞐S🞐🞐4🞐□$P🞐🞐J🞐🞐🞐|
🞐Kl□🞐🞐l🞐🞐🞐S□🞐🞐□□i>□H🞐□🞐🞐🞐r🞐E🞐🞐Xr🞐a🞐z🞐🞐🞐□🞐🞐@,🞐🞐t 🞐J🞐+🞐/y🞐🞐\🞐?
🞐🞐🞐🞐-🞐🞐n🞐^🞐🞐KiH🞐b,🞐y□$🞐pG🞐🞐#🞐🞐y□2/
🞐e^R🞐🞐Ч🞐🞐🞐🞐)🞐B🞐O9□🞐🞐{%🞐\🞐W%6🞐🞐🞐🞐SLiH🞐b,🞐🞐t 🞐J🞐W; 🞐🞐ح□□Ć|🞐k🞐OiH🞐b,🞐🞐t
🞐J🞐W🞐🞐🞐🞐□+□+🞐!s🞐🞐🞐□R□🞐🞐□□i>□H🞐□🞐U🞐sw🞐🞐□.-🞐🞐k🞐🞐Z🞐🞐g4$O1□🞐|:🞐@%”
$🞐7□🞐🞐🞐Jl🞐<q🞐🞐□🞐🞐🞐Ґ<🞐🞐□ч□
TJ🞐G🞐□🞐🞐□Ɔ🞐🞐🞐🞐*🞐(🞐□🞐🞐\:🞐.*🞐□🞐jp🞐🞐🞐🞐ʒLy🞐Ky□🞐S🞐🞐4🞐□$P)🞐□🞐🞐□□🞐7🞐🞐Pe🞐
{KBH🞐b,🞐🞐t 🞐Jϑк□□□□/Zj🞐🞐□b🞐🞐j🞐
U□□/*□□)□Bƀ;□□r□Gmp)□Xh;□□Lŭ'□Cw□□u□□□i□'R□T□□□□□□□□□i#□m□□h□□□□□□B□
🞐🞐🞐VW/
🞐W|q🞐ṃ🞐3🞐ġ^🞐Ræ□!$O1□□F□□@□□□□□□+□□□□□U□□□□□□□p□□□□}yN□R□+kCH□b,□□□□□□□=j
🞐🞐W□□m'🞐ƒ🞐y%🞐~🞐 Z🞐+|
🞐🞐z🞐🞐]M&🞐🞐)🞐Bƀ;□□ƒ□□_□□□m□=>□Z□)□□]□□□&□ƒ7N\□□□□4□{□/_□□]□□□□□□h□
🞐S🞐🞐🞐□w60🞐h🞐🞐🞐🞐.🞐B🞐 🞐🞐□🞐*□🞐K🞐□□□ 🞐🞐b]M?🞐🞐)🞐Bƀ;□+G□□?
t🞐🞐□🞐🞐S🞐🞐E🞐□🞐🞐🞐X🞐m□🞐j🞐}🞐□🞐🞐5🞐h🞐□□🞐🞐;🞐□🞐纖
W□□S□□□□w6ZG□□gt□□m□=□^□□□□Qȣ🞐🞐 🞐🞐HS🞐{🞐□□ĕ🞐🞐🞐🞐7🞐🞐|
🞐🞐🞐h🞐Uб🞐mr🞐r🞐vN]🞐9🞐🞐)🞐Bƀ;□x□□□□□=□□□□□□□□t□▱🞐kmQ🞐🞐M🞐🞐🞐🞐🞐□🞐🞐□□i>🞐H🞐□
🞐j🞐🞐□🞐篙🞐C🞐🞐🞐 🞐🞐b□🞐🞐%🞐h
🞐🞐F🞐🞐🞐🞐□3🞐🞐m🞐=j□🞐🞐;🞐🞐7.🞐A🞐B🞐'🞐🞐"]🞐🞐🞐🞐🞐X🞐🞐□~🞐🞐🞐□$3□□□□M🞐dSn🞐G🞐🞐🞐
🞐🞐)🞐+🞐🞐x□h🞐🞐🞐🞐~🞐U>🞐K$?🞐🞐🞐|🞐[u,🞐y🞐🞐c🞐🞐7N🞐🞐□@🞐□>g🞐)🞐🞐W□□🞐a□?
🞐<🞐🞐🞐cлk🞐🞐□ 🞐_-~🞐V🞐{🞐H🞐□🞐🞐🞐Hį 🞐'🞐h🞐🞐□Ə🞐Ж̌□🞐^🞐🞐Ć-🞐2□🞐K🞐4🞐🞐t
🞐J🞐+ơs🞐□m{L7🞐🞐🞐7□🞐□🞐f🞐□_🞐Ęu_🞐д🞐}□}c🞐É🞐🞐🞐🞐c🞐p🞐AЖ̌□🞐+🞐)🞐🞐+🞐🞐🞐R□]~ɯm🞐)🞐k]
[□,l🞐🞐'f4🞐🞐□Ə🞐6□^🞐%7j□h🞐🞐WS□Ỹ🞐?🞐XH🞐🞐🞐□🞐🞐u□3]🞐B🞐'🞐🞐"🞐🞐□🞐E🞐□🞐🞐
🞐🞐🞐ᒐm🞐🞐□🞐?K•m🞐🞐🞐k[,□ 🞐-🞐4🞐🞐🞐-□□
·🞐🞐hm□🞐🞐O🞐🞐🞐□🞐t0uB🞐ħo□🞐6🞐□SoC🞐'🞐Y2🞐🞐🞐🞐🞐🞐XH🞐□🞐KHS🞐{w1□🞐Cj#I🞐🞐□ Ɪ]🞐mב🞐k[
🞐□ 🞐-🞐4🞐🞐l🞐🞐🞐🞐□🞐c🞐□Ч🞐□🞐🞐04Ol3hH🞐🞐🞐M; i🞐🞐7□iJpo"🞐🞐;BmjmOHɾ🞐🞐%□ 🞐🞐%iL🞐🞐□
T禾🞐L%6loTFC|oT□🞐|:🞐@🞐🞐W~🞐🞐🞐🞐□}}□
🞐}}iL□l🞐🞐🞐=j🞐K9🞐B🞐□□🞐C🞐🞐🞐xe{R3□🞐{Rə🞐S🞐□*%🞐^🞐🞐🞐□□🞐🞐Yʌ🞐□🞐🞐□i.□T□🞐□ze🞐🞐Kl🞐
□z□U□□=□iL□t□□H□□□□□□(□aG3□W!ďf□1M□A□#□J□WvL□Ć□□□^□□?
🞐🞐4I□🞐🞐□*🞐^🞐🞐□□v🞐L{□B🞐(Y□🞐$□🞐:□🞐🞐{e🞐 Kl🞐□E🞐U□🞐#🞐iL🞐t□🞐H🞐□🞐□W-🞐aG_🞐W!
ď🞐🞐1M🞐A🞐#🞐J🞐Wv🞐Ć□🞐🞐^🞐□?R🞐🞐4I□🞐🞐□*🞐^🞐□🞐🞐□□v□🞐🞐*🞐🞐y🞐iL🞐t□🞐H🞐□□
Qb🞐IPm🞐j□🞐s&ʒ&🞐 @%🞐+;s🞐🞐h🞐🞐/🞐^🞐□?🞐$🞐i🞐□b□ T🞐¹jʒ🞐🞐🞐🞐
!~.NSL🞐t□🞐H🞐□🞐ABP□🞐L%🞐🞐}🞐🞐🞐Y🞐zf🞐🞐🞐AQ🞐□Ł🞐□🞐🞐6🞐🞐□/□□ij□□U 🞐Dl
蘢!D🞐🞐🞐X🞐+🞐q🞐🞐7□🞐B,🞐🞐p□ڑ🞐%🞐 c🞐□🞐6PwБ7□🞐!ý🞐□[!ħ🞐🞐🞐x🞐🞐<C□=i🞐y🞐□I🞐c□0
🞐6p🞐V□🞐🞐W>□🞐🞐F🞐🞐🞐🞐🞐=j□ 🞐WHS🞐🞐W□□🞐🞐6V🞐z]🞐H🞐🞐🞐□H□🞐 □!□□□□B□□□0}
🞐p🞐□h🞐🞐Wx□🞐🞐□🞐<0□zKm🞐8q🞐🞐🞐7□cw🞐□🞐y□Bt?🞐🞐🞐4🞐🞐🞐E{🞐□ww1□6□ف🞐|Q🞐h🞐🞐🞐W🞐
g🞐🞐□□🞐c!Mm🞐🞐🞐□🞐F-🞐□🞐rL-ђ🞐🞐.🞐Bo🞐🞐🞐🞐🞐
□□□0~□□□□m!D□_□XHS□□Z□Gmpw□c□mjc□□□ 🞐🞐 >□x🞐🞐🞐B🞐🞐🞐□6🞐w🞐Gmp🞐
c🞐mjcł'□🞐□□0🞐□🞐🞐□t!D🞐🞐🞐XHS□🞐;1🞐6🞐🞐🞐}🞐6□🞐ū□ƒ🞐□🞐🞐□^□□🞐🞐d|,🞐#□🞐;6🞐🞐🞐}🞐6□🞐a
Jy🞐;8}P🞐l🞐 g🞐□□🞐c!Mm🞐🞐h🞐🞐🞐🞐□🞐B🞐🞐□🞐□🞐s🞐🞐🞐j🞐□🞐🞐🞐□!
🞐□🞐🞐B🞐O9□🞐T🞐🞐🞐🞐□🞐🞐🞐 🞐🞐□Bt/□🞐
t🞐🞐□6🞐=Js)🞐Xh🞐🞐🞐>w□🞐U4□P🞐🞐F□🞐🞐\ƒm.*🞐□🞐j^>🞐?□j□g□🞐□🞐🞐🞐c!□
TJ🞐G🞐🞐□□w🞐🞐🞐y}!D🞐🞐🞐XH🞐🞐@□🞐x🞐 斋□□8K/🞐🞐~□□□i>□H🞐□🞐]🞐Rb□🞐□..🞐🞐🞐c!□ T禾

```
+xJl□□□□}|,□□t □J□Wv%R□
□□□Bt□□□□4□□$P□□ų□*□□s□B□□□□□ǩ□*□□□^a%6p□Y□□□>>□□|:□@%□+□□□□□ !
□□□□B□O□□□□□{eW□ղ6p□U□□□>>□□|:□@%□+□□V□□□B□□□□□ǩ□*□^E□A□□□t !
□o□Ǣk~□t □Jt□N□ç□b□□□□*Z□□□\□□□Bo□□□WH□□□Y□□□□□□d□□□□□D□□□-
□&j]\?□{□□*□□)A□□□□mZ□□WH□□□e□□|□ \□□{E9□□□□-□|□□
\□□{□□*□□□□K□M□:X□+$P□□□□-_□j□W□□^!□J
□ho□□q□□□□□□□□%iL□□@□□x□l□□□□□m□□_□Kc□O□□□□{ek□%6pl;□□□n□□|:□@%
□+[□/□□c□!ķ ʒ□ǩ□*%□^□□R□□h□^□□□□Ei.□T□□□ze[□%6p□>□□6g□Ɲ1zo□ T禾
m□□□8F□B|□>□i:F□@%□+□Qb□□□C□□□Hc□□ʇu$P□□□□□□□□1□□□□□ʒ□c□h□ T
禾}r%6p□>□□□□4□□□=ZG□□x□l□g□ □□□!□_4□i:F□@%□+□
\b□□□C□□uNc□□ʇu$P□□□□□□1□□□□□□□c□h□ T禾
□'%6p□>□□1□4□□□=ZG□□x□□□TS□□□ч□?
□□□4□□G□H□□□□"S□8F□B□□bSL□1z□□□*□1zA]□]N□□□□=+aeG□□>6□h-
□ɓ@□□ʌ□□a□□□3□b□k□□x□~□□□□qn
□□e□□F□□"□□□My□□□□□9□4□□M>□□Is\Y□B□□X□Nt□B□+□□
K□.□+ww7□□□□□□□□YBP□□GS~□□□□*n□□M□Ow□I□□+□g4D□□□□4□WH□□□{e□ȸk□o6V□|zjc□m□i□□{i
□îs□C□□□□鐮□6□□□□□B□□□□□Q□v□/□□□P□眸□□g□□□Ă□□!B,□C:~□□uh□
TJ□G□□□□□[□@m|t□{M□□>#□□□□!D□□□tHDž□g4□u$P)□□□□□e}+nm□□□J□ӂ[~□□□□!0□□!
□□□□#□J □□W]~ʊn□□□P□g□□5=□?□d4D□□□□4□□$P)□□□j□%□n□□□□-
□□"□□B□O□□□□□□z□雇U□J□jC□□Nv□□□□C□□□□鐮□□?□C□H□R□?
□ջ□□V□□jC>□T>□□□□□□□□□P□h□ TJ□G□□□A□□□ڑ□m□□0□!□□˚□□!□o□□3□□#□J
□□□□□□□□N□□□x□□ڐ□>□□B□□XH□tl□□□□h□ TJ□□□탆T□□jC懩
□□kG□□9'□□□□□□□□□9□□t □J □□Wc□□Rq+□ Yv□□
□□□□□□□"□]□□tH□□□l:□@%□+ÿ□□□E□
YΦ□□]LC□□□□□κ□□:□□□□□5M□□Jũ□□□;□p□□%□□□0:□□□x□~:□6□]□□□U□(□g~□□□□us
□□□□□□vZB3□□ӂ□□>□dZ□9b□k_□]7□□i□□:□+□□□?
□1□□□□□\□□|B□□<□□□u□.G□1□□□O□H□{□□iL□D□□?□□□tLc□'&□□8□J□j□4Ot□Z□□□□
扣7X!□□□gSL□D·□□ϧ□□□□<ɋ□□□□□□'□y□□(□□□z□□m□□□□D□~□□w)□n□□□□Li$Z□□/
□^□H□Ē□?□n□=□<□□k□[m□4O□□□g□G□□□Z□HS□□c□□□□V□□□□= □□$□□+u□ɻ□y抨□
□□□□□□□□yb□h×□□□S□ol□^ !:o□□p□&□□□6□TkṚ□□.n.□ ^□□□□nh□
T□□yf□%□□□-]□{]\e□□□e-
□^□%]□□TMf□□□□□□tM□□□□□□□□e□□□@%]□□T□□□[□□□-]□□9x□□z□B□□t□5□□□j□ɰ̃W
□□k□□W□□□□□z9?□
□□9h□z□□ŵ□□□□_□8□□□@%□b□l□□□□□t□□□□J□□□□ZH□□n□e□□V
Z□□□uqo□□□□B□□t+□f[□□□[□^□w□ ^□-$PI□□k□m\z□□□□□□□^□□L”lk□□u□□□□靴
□□□□w□□□tτ□□]□W□□hF-$PI□□□T□0t□□uAK□□x]□□"x5nDs□j!□J□□\l{□□AK□@□n□G#x□k!
□J□□□□□□i□tq□□□□□B□□□□□o}/g□□□□□□□v□IH□$□□□^Q□mlXj/I□□□□□□□□□□□□□u□□□□
□□C□□□q□];□#□□h:~□□ʒɉ□;7{□□□□□-□□tq□□Ϙ□□□□%^□~B□□□$□y□S□□□U□□rn□□S□ŝ□
□W妬WH□R□<□d}:□□□□C□;□ Zy□□□□T□□□oA□B□□□□D□□NF□□□uqʊ□U□□□□ω□□
□□Lɇ□□□□□□\□□□□□□sQ□ TJ□ygSy□k□□□□□<E]□□□-x%□U=j!□JI"ΩT□)5□□□□□□□□□□b-$P)I諟
□□□□v⊥□□%□.□]-□□j□Ÿ□□GZH□R□A□THX□□!A□□□□Tr^□□□ƨA+OQ□□□ 6□~□□\□B□□□□
Zy□□□□!}□□□□□□□□□i□□□□□<E]□Q2xu□7□vG-$P□~□A+OQ□w□^□ZH□□□j□□□□□□;|□^!□J!
□□Zy□□□□□□□□□□r□}□□□.h□)□□^□□□g~
<□□□□@□P□P□<E]7ₒx□k□□□h□□□$Ats□_w□z□;□□Rb□□□□T□□□□
凟□P□□□j□ŷ+□□+Q□□>□□My5h□{]\□EGxQ□□□□□□□□>□j□□0□□□□7□□□"□□@I□□□z□□□
6□9h□7□□□*□□ρ□□ƒ□B□□□□□□□/□□□□□□□uqEe□*□B□□tï□□□□t□□uq□)□h!
□J:□□l□□□□t□□uq□k□j□□'5□□□□□s□L□□}□X□9h□□□□□□□□□3?□^!
```

```
J   t98s W  K   W   ZH  .93  z g}  %'   erc=j!
J F  s  k ^    "BOP)  ]  x]\   Rw$P z    -]#   y     U
Z f ui   J  P  T  o l   -]C   W y 遄 Q  T yI  5} K a!g ZH R }
佪Z   ui6 J   Q  T   j   -    y     *     p
nAz]:# y% 9   l   7     Y   L WU   b    UU  pmc '   n: ; *  F Ê
FZ    jÔQ!j KWI Ælac k   UKT 6\, Fm n:d    P{ Wu !6 |    9  !
: ×   glX C^ н   { H   Y    f    _   W  ?Gqpw7   x U : ×××××
}lj=  ]+H   +w !{  ^A '  5 C ^XWA '>   {   4O  X   a
<Q n C X [ i  ;a3O    'l u 才    i h^    y n +    }  0!
9# v F  .!
  #]J <  jt J U *VO  "A  H*    UG  Z +    ɣ    /7   N [   D  \, u w
W    yjIE=5z 8%  IE  H y    z
'   #  +J* +B 'j  y  F  i 09  i 0   ?
H  9 3@ 'L l 3 <aJ  V#  I*  A 'Li TTi 4O 9  i 0 ~RQ >  %  "M
U  n 。  ~ e6  ۓ  -  遯?:    U  3   z  J  ^ _  ××
 (  UG m XH  <t  ' = + t  ' ×  !  i  o  DO  >A
  e  * C-)-  w c Z  %>g !  i  >O t  y 'd> Cl  <!
Z bk}  [  40 2  H , . <! > ; <! W bk}?  ! ×  i  bk} f
U  U  y ' nr ) a  j }  ]j#S k<  O} r8  商 R  k  X . 滾  ×
W W  7M  M  i 0 iA  }5  y |
% 40  H  . <a  ; <a (s  ×  g 40  <g y  C 'L az  ×
S  y  W i 0%  A  d !l  <aj *d
 oö <  S  #;  $  qmI  T!  . Q  ×××
JL  m E #Z^  @D  c Ò i x  x  i  N  F DL q3G  5  <Q  Ij O 4(
4=z  1  /  計i H L3K  . ;  i  nXgBVpD  !B, %  Ã -W  tY
X  #\ e  ^ t wE  H  IbQ m :  챏  {  m L D
 n  i p C+ # W  H G+ i  E '{@  4O 6  ?
H kɔg 4O  z H k  i pm  PA '\  _A '\w  +H ka  H kū  ××××
S 4 &&  S!BD  O @  J  A i 8f u:K
JsD  _  4O  k^Y  @ 4Ot 0  q @ '&  Ţc y  i  :?  <E
 O G  q  H  K 6 <  ıZ  Y c=  4Ot  HÅ  I i  :
 H  k:  ]n H Í9  ĩ  P !  j  Q+Zi[ # V "  jM  Q+×××
 B  H Z  BHuo yB JQ!j :  <  tc  i P+xT  I i P T  i P  T  i Pk
T  vR> ⌊X N H  q  [gz Q  U  ^W  6 "  W r  P :]w]5 H,Q-
ze  ~v V  ]  -
 6 z  P a U6  į \Oyмc  t  k:^ y  x q )  ^  ^
 ^?
A  r  =  ơ  kB cQ  ww ]ɒ  M  ㇀  q  ##O m8  S[  0:9  ×××
t8  <  y m  =o~l 8  ⁋E  e I-7 {dv  ,x  t  8 ⿻ sG/ 9; a  ×××ʰ . ?
8 k  a  ×××~  m  sG  F  tE  Ű 쓷 _H #  C ? (=ʛg ;W ㇀  #N
< 6  /]  t  ×××××  p U  ? )K  ××××  M?
9M z /"]l  C  ×  ^  T  G5ǰa %7  ab ]  t  =r CZ Z e  E  ^9 *u j]
K 1 |  G Ÿ F  ××××  æR  6  Q  A  S ; ;  ë  &~ &"]  ×××  -
=  ××××  ×××U  jZ  Y  ×××w$  ×××
××××××××××b:  ×××  cmHm$  w#Z q}S  <J  ××××  lBz o' |v 8a 8  h扉
y m  j $  ××××y э:  i  ××××××c  C 才ox9_  g:  i P  ××××8 ^
  o n  !  ;@ D  [  ×××  4G {c]  C u  <1  /
```

```
⬢⬢,U!H⬢s⬢ƒ□⬢⬢NWj□i⬢h⬢9⬢⬢N□H⬢ĘjЊ⬢□:K⬢B⬢'⬢⬢Щm□u,⬢y⬢G'm⬢⬢⬢#⬢⬢XH⬢đ⬢;⬢⬢8⬢
⬢⬢4O⬢X□⬢⬢⬢W7⬢□⬢⬢{⬢⬢W⬢t⬢⬢:⬢|
⬢o{D⬢Z⬢⬢⬢⬢□⬢⬢□⬢⬢⬢#⬢W⬢⬢G⬢⬢qo⬢(_y⬢□Q⬢□@{D⬢.□⬢□⬢{'⬢G⬢⬢⬢⬢n⬢K⬢⬢h⬢(⬢⬢
⬢⬢⬢^□>r⬢□⬢⬢9⬢BY⬢b⬢R"⬢⬢|mMБ=d⬢}FB⬢1⬢⬢<□{⬢□⬢'⬢□B⬢□⬢⬢Ch⬢⬢}
⬢□⬢□⬢7□⬢y□⬢?"4O⬢□K⬢⬢ ⬢lj⬢<□{E□⬢'?*B⬢□⬢□ □□.□□□□v%;□71□c□{l□□ƨ⬢|
⬢⬢:⬢c⬢⬢o⬢⬢⬢'⬢⬢C□'vs{Z⬢□|_⬢:⬢⬢⬢⬢□Й⬢ ⬢t ⬢⬢=⬢⬢⬢a⬢J⬢W□y⬢⬢{|
⬢1⬢⬢⬢□⬢μ⬢⬢9a⬢I⬢⬢□⬢>□⬢⬢:⬢⬢ ⬢⬢ ⬢'O□⬢[⬢=⬢⬢E⬢⬢□□
⬢⬢y⬢⬢r⬢⬢5M⬢⬢□⬢⬢$⬢}
⬢o0|]⬢⬢u⬢l⬢+⬢+,\_⬢⬢⬢nagG⬢□□⬢j⬢⬢⬢⬢□□⬢⬢y⬢;⬢⬢⬢%⬢□⬢=⬢7IvF#⬢y⬢⬢⬢⬢r⬢⬢W⬢
⬢Z⬢^⬢□⬢ɔ⬢*□s□⬢□⬢⬢F⬢□3⬢⬢ w{□□□|□~w□□□
⬢⬢□⬢C.⬢⬢K>⬢⬢y⬢{Sk⬢⬢⬢q;"⬢□⬢q⬢:⬢+K{o=⬢⬢ w⬢□⬢c.⬢fNƧ⬢G□=4b3⬢+ɿ/\⬢□g□⬢□
⬢⬢WMW⬢⬢Ce⬢□⬢⬢⬢t□wn⬢⬢□⬢⬢xη"kXYB'>⬢⬢⬢њ1□+□Iǧ⬢'&□⬢+(
□Jľ□R□U□□Wv□□□□,m□□□.□M;t□□唉:□□<□□□ *⬢⬢□⬢c!
□□□□□r⬢⬢⬢t,⬢⬢⬢jy⬢⬢%⬢U□"'4O⬢B⬢⬢□⬢<⬢uO⬢<□!⬢g⬢⬢>□
⬢⬢⬢⬢HÛP%⬢⬢⬢□gC⬢⬢*⬢⬢Ei⬢⬢-⬢⬢k⬢!
⬢□⬢⬢Xq⬢F⬢□Xʑ.#⬢⬢⬢⬢□a⬢M⬢6$⬢⬢T\□2&ƬH⬢⬢⬢D⬢5*⬢)⬢d⬢ ⬢Kl□B~⬢9|
⬢>V⬢⬢□□⬢⬢k⬢⬢□⬢q6⬢□⬢⬢⬢pJs⬢⬢⬢⬢⬢W⬢4O⬢/⬢⬢}⬢H⬢⬢
⬢\n⬢4O⬢□⬢⬢⬢8H⬢□⬢]⬢□D⬢□⬢⬢X'⬢⬢G⬢}"⬢kQ|⬢H⬢-⬢⬢⬢⬢&⬢□7⬢tD□⬢^#□⬢⬢V⬢□B0□⬢
⬢⬢~⬢⬢⬢⬢r⬢⬢)⬢⬢⬢⬢⬢⬢+\O□⬢<⬢V⬢⬢⬢:⬢yb⬢□^□⬢G0⬢<q⬢□ˇ⬢u⬢4GL{⬢q⬢z6⬢扛⬢⬢□
⬢{⬢4O|7⬢E⬢□Z⬢□W⬢ "□□□□%a□□□□□□.h}
⬢⬢k⬢⬢;&}o⬢k⬢⬢⬢□⬢sn⬢D⬢⬢V⬢⬢^UE⬢~/\#}h⬢C□-<x⬢⬢{⬢8!
⬢⬢⬢⬢⬢⬢□□□G⬢B⬢q⬢⬢□6⬢:⬢O⬢⬢?⬢KƆ⬢jq⬢E⬢⬢⬢⬢⬢X⬢⬢3⬢;⬢e⬢%k□⬢8⬢⬢F ⬢R{⬢ Fe
⬢g⬢⬢⬢z⬢⬢kw]wnz⬢⬢□□C⬢>N|~⬢⬢Q,⬢⬢ão⬢Q⬢0⬢⬢⬢⬢⬢⬢□O⬢w⬢□⬢j_BP⬢□□hI⬢⬢⬢⬢⬢C
/->□KP□□□□#X□□ě□□□1□□□□Y□□r□hh;□□□@□<□7 ⬢s⬢⬢⬢⬢OM⬢⬢⬢&⬢⬢7⬢D⬢⬢□!□U⬢⬢⬢k-
⬢⬢⬢⬢;⬢W⬢{⬢□⬢⬢^:⬢□⬢□⬢⬢V7>8⬢⬢□□?{⬢lqm⬢⬢B⬢□⬢⬢⬢⬢ ⬢⬢{⬢⬢⬢□ū⬢L□⬢⬢⬢
⬢⬢%□ A⬢⬢=⬢s⬢o⬢}⬢v\⬢^9⬢⬢⬢□□K□⬢NZ⬢⬢B⬢⬢F:⬢ƨ⬢□y⬢hx⬢⬢B⬢□⬢⬢1#□X}
□⬢N]⬢□R⬢□⬢ǴW0⬢6F⬢~⬢U⬢!⬢|S⬢Y⬢⬢!Z⬢⬢⬢X{⬢Λt□⬢⬢l<e⬢#⬢us⬢N⬢□⬢,□⬢⬢P|
⬢⬢q⬢⬢J⬢⬢⬢⬢⬢⬢#M⬢ȅ?-⬢⬢□T⬢<□⬢⬢wD□F⬢⬢⬢5ƀ⬢U⬢_4⬢n⬢⬢⬢⬢⬢⬢⬢G□R□h⬢Q⬢⬢□⬢□
⬢ǔ~⬢⬢g⬢Ў]N⬢OS|⬢,j⬢⬢t⬢|□⬢⬢⬢□⬢*s⬢L⬢⬢M□z⬢'⬢⬢⬢r1v⬢QQ,⬢⬢uF⬢[⬢.⬢⬢⬢|!厠
J⬢y⬢⬢9□⬢⬢⬢⬢⬢n⬢ţ⬢□@□>l⬢⬢⬢⬢_⬢8□⬢>□Ê⬢-M⬢eɥ⬢□⬢⬢□⬢⬢⬢^⬢□⬢⬢⬢⬢□~⬢□IG⬢⬢p{}
⬢⬢⬢@⬢⬢⬢[□⬢j⬢⬢ˇ⬢X⬢⬢v□□
⬢U⬢w0S⬢:⬢Ģ4⬢p⬢%⬢□⬢⬢^⬢⬢'⬢v□⬢⬢y⬢⬢⬢g{⬢'⬢⬢□v□⬢ˆ⬢W⬢⬢□v□⬢⬢⬢
⬢G⬢⬢⬢⬢□□⬢□⬢⬢⬢⬢□⬢r{}⬢□⬢|⬢=⬢⬢□⬢3⬢⬢⬢⬢ ⬢g⬢⬢⬢⬢?
AO⬢}Q⬢lx38⬢⬢⬢bg{⬢'⬢□2v□⬢⬢y⬢⬢Scg{⬢'⬢^8v□⬢⬢⬢yK⬢□D⬢'6□⬢H⬢k⬢⬢'⬢9^"Ċ⬢m⬢MȮ⬢w
j!⬢r⬢(⬢6z⬢⬢⬢⬢⬢;□⬢⬢@{⬢WOL⬢⬢□m⬢⬢□⬢4O⬢o⬢⬢⬢⬢æ ⬢y□⬢□⬢⬢⬢⬢⬢^⬢
;SV_ˇ⬢afHV⬢⬢)⬢i⬢0⬢0⬢⬢Δ⬢4O⬢⬢⬢Uag⬢z⬢'⬢lÇ⬢3e=⬢□f⬢jUˇ⬢⬢⬢ 3+⬢⬢LYO⬢ѫ;S⬢⬢<a|⬢
;S⬢⬢<a⬢KU□⬢⬢⬢ s⬢⬢Δ⬢t;)□dJN;S⬢⬢<⬢e-ƃP⬢⬢□f⬢⬢□?
⬢⬢⬢⬢i⬢⬢⬢⬢)⬢n7⬢⬢n⬢⬢⬢⬢□⬢d⬢⬢v⬢⬢ !□t⬢⬢:1⬢H□Q⬢⬢□T
m⬢=K⬢⬢□{ID⬢z⬢N⬢/z⬢⬢⬢<1⬢⬢fM⬢U
H⬢D⬢□3u,⬢⬢□i⬢8z⬢⬢:⬢Z]⬢4O⬢,⬢⬢⬢⬢□⬢@⬢'⬢□t⬢⬢⬢V⬢ ⬢□⬢>□iJ⬢?
nB⬢ɾ⬢u⬢kᴇ⬢κZ□□k⬢h⬢"K̂⬢b⬢⬢⬢□hC<rj⬢□AcE⬢⬢ĥ⬢|□f⬢⬢⬢⬢E⬢jдк嗎1?⬢u⬢⬢\□⬢
⬢B⬢⬢⬢□a⬢^i⬢⬢⬢⬢⬢⬢⬢;%I⬢i̯□⬢_ƨW⬢_t⬢⬢□⬢□Com⬢2□c!Mm⬢⬢ɬ⬢@{|⬢M⬢d⬢c
⬢□x□⬢⬢⬢z□v⬢<0□⬢⬢⬢ ⬢⬢⬢□n□!U[⬢)⬢⬢{⬢⬢1p⬢+MXC⬢XHS□⬢⬢0k>⬢□□w⬢"M ⬢
b,Z⬢C□⬢\2+8⬢~K⬢flÿr⬢澱
gzl⬢bm□c!Mm⬢⬢Ţ+A{⬢⬢2%⬢Y⬢⬢4O⬢□E⬢□⬢□⬢X⬢⬢L⬢□dJ□⬢Fb⬢AS~⬢□⬢⬢⬢⬢□vK⬢⬢⬢⬢
e⬢⬢a⬢p⬢⬢□⬢⬢w⬢⬢□ˆ□⬢y□⬢□Ƃ⬢⬢9Ƈlm⬢⬢C⬢⬢Ą⬢□L⬢]⬢⬢⬢⬢(z⬢⬢Ų⬢⬢+⬢⬢b,□B□X"⬢=⬢T⬢
z⬢d⬢⬢⬢.?□R'⬢Rl⬢a,⬢M⬢⬢jk⬢⬢S⬢□m□r^⬢⬢⬢T+⬢⬢x⬢⬢⬢j⬢⬢?
```

```
Y2XH t z 8 H 6. N ?XS bT -l I "t
A S ^ n/= k@m 5 ]bO B =j K9Ɗ h u . z
1 S #XH )G p^ . a :Ea_ B cƺW @ q^ ] ] Ɛ e 0 Ir/
)xa:' + N 4 !
J= { XHS r Gm 'q 1 C T 1 J : m ^G Oy
y U ! K c!
ă @ âW Y Rk > *G 6d bWU ij S
$N9Ɗ= h u ^ ^ RM C j 獱 )O #Q = ^u Hk u C 4; 品 5ʃ 歆
U B =jæ< S 6 }
Ụz% W 3= S +bj2 i S * ^mw :} ! 嘢j & 0 &J?
N { Z ^ 6 1 v OG T ^ ƒ I S ^ 6 1-/
4 )G{ʒMy c mj u x z W }}U BL Oy
T ^ 5 c K a gI [SL g I "B{ʒ b 5 v @ '"]L #v ]
Ɉ6 w ðu4 yL . #G P! i U "J W R Q 1t :[B0 &CO' @
W }. 5 E 1P r Gm WKR vb t ]H |7s9
XH )G x p {jC Q= ,ɬ c U: uMs $Pɔ [ ,K
@] -9 ^!AO P5 ]~O ☐ K W^ +$Y l ɗE Kw W^ z?
c '0 [N w3< u lz O]] { = B :Y ɳ +V
zZ j L f ɳ +>+$34 o
@] jƺ B Z . xJ 3 8 獨>< ɳ
u WH SPT { D ɳ ( (x = z 2< u 'C B c ?.= @y%
+$ 96 w Wx& L ]+$ :_ xR W2 x = G K .= Aye
[,+$ ID ~ u P G +$ L0bR P +$ Pv|P )ɳ#lz
{ ʒ u /U,5 Z K u K *},J Y ! ] W U .jB|
b W LS1 /0 ʒ}hc /
XjdI m ☰ a[B> W 5ʒ t A ' M |?
m ! j N 2 m . mg ij 5 w iJ (2 c 5] 蛬 k 砯
& e XHS &?
C x ɥ7= C h < w iJpO ca v 5r}m{ uq ل (i F L,3?
#< 6 F- |jHS {K0 j S ;L {e D { },?
)k7 ?$P }T wva{O . Zy ɿWH u'_
f K V^ ʒ +$P 2l ɾ;h +j! JtDǹ a #. s RQ
T < ; u . ɯWH t'x 1( K B 3c ̀x p 8 A DG )!
. ; G Q T \ ;F u n 8ʒZH L ; ĎN{] ? j F 5 ^!
Jt$N]bG . G P T j ; = q @%: ; . 5 ÁP
g* K Y ~ W K ;c ʁ qt @%:V Nm 3 . NJP T #?
; q @%: N . / GeP T c,x
c, =1 !v ɣg D
H . 4 -$ :8n Rn[ ^ Ɯp<?u |
l ZHΓ O5B]z" |$ odz P n B h l ɣ a ;j!
J qB]zN F ^!AO v<- u ʔ ʊZH s B]z ! O }
^ d1ɳ BYK B h ; w C ƚ h B f s dx W'-z =
l8ɢ Td B 2 xb S x ɯ { x s x
c J O C]z # cE^ 坼 Kφ ≅~ + v<
u i ^<Gя y% Q e k ] 0s9 s 1 d>5I ] >ʒH 5 zX2 ɟ#
>Q \ 1 6ڤP - Qk}m z 3aʤ}, #J W wŸ
G&k2 O ɲ i
```

T@^a_8@@S□@@Ys=wvf@@E@@@□@□@Q□8Б@b,@m@□z@h@@BOhↃ@@ofw@@(@8@@□@@
I@□@*!j@P\@@@p @@@@□@@@@T;!*□j@P\@@@@@@{@@^!A@v@□□@
@c(@□E]\@@Jb@@@+N@Δ-s@@S;@@@U@ŵ9ţO@9@.@
@□@@@@:@c(@@E]\@c@Z@@¿WH@R@@@BuR@ŕ@@@@@@W@^@^!A@@@∫"q@1@@
.@U□{@□]@lvn}@N@□\□@@@b@x5u@u@WH@@@f□ڈ@дĵق@@@@W#@z@@□□tƺz□uRo$@
G]\@g@R@*@
@□@@□@y@@@p];@@B@`□~□□{□□]!ov6@@Y@□@@□uq@@@j@;@□@B@@@W6n}a@@□@e
□□n□□O□fl?□[8□·T;□v<@@@+□bl,:□R□□?yù□ $P)@?S~@@@@Xꜰ@@|
[_@;Mm@@d{v2@Ä@{@@@@6p6&6ڤT@□@@@9N9@B@@□@@@*}@@J@@wW@@Q@
1@□@Bڤ@@@@@@)G□@x@η@B_@@@P;□¸f@’□□Ea,@M:@z@@□@@□@x@@@@V9□@@@Z>@?
@@@ʃ@@□c!m@@r□@@□*@^@t@r}@@IjC@2-@@TNmBL.@@@6@?xT!□H@□@
@@C@@@Ↄ)t□□□W*□7□)?□□@)}@@AM@@@□@@Wh}6@/*@@□◘@@@□@@@.@M@)91□e
$@@U)@@&@@@#@@y□@&?@@U~O@R@@□t@@h@1!
@@@@@6)@@@@8@H@□@ɲ]□□6@@ɲ@@@@Y@U&@л0□□&□□FVH□□□□{□□6}□J!jC□□?
@@@@T@fBL@□c!m@q@@^uq:@@%M@@kU□R□@@□S@@□S@@XH@t("N□□@@{□@{F6@i@@Y@bBL
k@@ @I@3@@o@Ж□*i@@@@L@@□□@@-@qH@b@)!□B0@3□ↄ@@+G;%@@@kF/P)@□@P@@@X-
@@@G@-@@_@□@@@{/
@g@@m@@g@@8@.]Cs@@@□6@@@y@@WH@□@@@@ƅ□,@'H@@R@@k@@d@@@f@<@@□@@@B
@@S@@@□@X@@@@q@+@ŕoI@@@QY@@_@@ЈWH@ꞏT□□□□A□U□□□o□.□]□□^□3□□□8y□YGR□□□
@x@!@@~□@@@@疮@@kb@@Ǐ@ϒ□□-
za@F)@□@@ж@@□@M@@@q@m@□□HSb@,9@□@@"@@□@hDO@^??
O@d□&@w@8sOB@=@□@@@@k7_4B@□pwJɳ@□}W@@□+□'nx□!@□@J$@^w@@@-
□□K@□@r@N@@nj8}@a@@{ж□□z@ɯt[@□YO@]OQ@@@@ϥm@m@@□□□□X@@(ف^m@oj@@□@@@菐
@)1RÔ@@'@@@uj@!□=@@□@Z@@vↄ@jI:@Iv@E{4□@vXR[@@@
@_9@@@@□@d@c@@□□u@@□@□□=@;)@@лk@@fZ@@o]@@@E{4□@@@X[@@@{\Bl
M@□@u7@@m□u@@;@@□=@g@w@@@@@@□.□@@!;
(@=@@@□qPm@~O@@f@8b□iJR̃f@□\@v□@=@@'U}m@@@@@□@C@}
@@@@@□□@Q@@@@.æ@@□@[@@@f@@□@O@@@@@v@@□(@@@@@@□r@@#□@□@@□iS@&U
@#@@@@@S@ï□□@@@@@/^i@$@9@d@@@@@@6□@#ς@h@{@l@@□@@@o@3@@_@~@;=@□iJ@
R@@緁@9@L@@r@' @@4l̈@/@1@□@□l@@@>vm@@2g@S\Q@@f?
@@7M@@@h@@G\J@dE{дк'@@>|xp@f□@
@)@,@□,@h@@E@@Z@D@p@@9@V{@j@@mL@#@$□□@@e9@@@u@@@@@@E]@@@k@@@bE@t
@c@@WG #□□^@r|Ċ@E@''□@@,@@@-9□@6@ 枕@@□B□@G@@X@@-
@@[@□@@bɲxe@@6e@□@@Oo@@@□6@K□@G@R@@y@@@@@Ш+@
@@@□@@@W@@}Z□m@□@@;@=@ȷ@@K□x@Æ@@@#6@@@zr@C~@H=I<□□=@u-}mj}□
@58@b@@□@>@-!@□M@@@@@@□U@□O@F]Yg@ɤ@z@@C@nᾩ□+gt&6@@@{@@.@!
@□[□@@@@@@Z@@@@@@k@@@Y"@J@.@@@z@ʾ@ˬ@%3□m□□bk@@□Y@@ɤ@!
@@@@@@u$PR.A□G@@pı@□}m@Q@@@@@□j!@Jf_@@@vX@@□@@a@@@@oӨ_@@{53@□f@ 떗
&T`Z@ @d@□@@□@ @@A@Kg@□@W@vJv盈@@@m@@3@鰆
@@□@□E@@@□@.@@@#@@@□@□E@@{X@.@@#@@@□@□E@@@@@.@□@#@@@□@@@@F@N@
@□-@uq@@j@□#@c@@@%?vWU@@F@@@z]\@c@R鈽B□@舢@@}@^□@□@□E@B□@舢@@@^□@|
@□E@B□@L@@ u□@@@o@@@J@{@@^!@Jf@N@5@'i@@H@ɣ@@@W@:n27@
T2o@□+2Z~@@@ҕ@ƅ@V@U@
T2_@c͡F@"@@œ@.Ȯ0^@@z@@@+$P@@□@]\@@Ո@□@@8@@x@FS@@@+$P@□!Il□u@5@(:B@Sm.@\
@=l@B@n@3@@@^@□?2@cɜ@@@□c@@5&@h□
T2@d[@~]@]@@Gx@@@)@@□@@;@3O□@@@%3@R@@□@@G@@@@)@u□@SD@□□@d@d@i@@~□
@□q@@2@@@a$@y@3@@^!

```
◆Jf<Jy◆◆Z◆◆g□x]◆S◆;◆◆◆□□{◆□◆Q◆◆z◆◆h◆□□^W◆◆◆0J6k◆◆◆b◆◆@%:◆e◆◆L□◆+□◆u
q◆□
◆◆@%:◆e◆◆◆□◆+□◆%◆□◆B-$P◆◆◆.]◆{◆ʅ◆◆◆Y◆u◆□◆◆at◆OmQ□{◆□◆◆◆z◆□□◆◆◆!◆u
囧◆◆X◆◆;N/x◆□ë□◆◆g:y]◆◆◆◆0◆b◆◆◆◆+$PR□ʂz◆o□-?c◆◆◆◆◆u□◆Y◆ί◆c◆◆@%:V◆!
◆k◆]◆◆◆ ◆◆◆07c Ironz<◆4\◆□◆◆p□◆◆◆1◆{E B□ ◆&^◆Ow^◆◆eq□□◆B◆◆◆□z◆◆◆NM□/
◆<◆◆□{◆6◆%◆L◆:□}◆◆◆y□ξ◆m|◆>◆◆
ن s□6◆□□◆◆$□◆qR◆z◆76◆t◆◆□◆◆◆<◆◆◆}t□◆N{◆◆<◆◆◆◆◆NM◆J◆□◆◆◆x◆□*%◆f/Mk◆
w◆◆◆◆F◆◆◆/>◆◆◆◆F□◆◆◆◆◆<□◆□v◆◆◆◆◆?□◆◆2◆□P□
T◆oǦ◆4u◆◆◆◆◆□◆◆◆◆◆◆◆◆_◆◆◆◆7◆◆◆◆□
◆◆7◆◆◆□◆◆M◆◆ZH◆R◆◆□◆◆◆◆w8=◆x◆}
◆◆q◆◆◆◆◆□◆C◆◆◆<◆◆◆◆G□7◆<◆◆◆□◆X◆ZH◆R◆◆;}
◆◆m◆q◆~◆◆k◆◆◆◆|d◆z□□t◆◆◆◆<◆◆◆й◆j◆◆◆g◆o◆◆□◆□□◆◆◆◆.◆N◆□f◆□◆◆□◆◆
◆_v◆N:□u◆◆□◆◆◆'G^◆Q:z◆q◆◆◆g□j!◆JI2◆=◆^◆□◆◆z◆䜌
◆V◆V[◆□◆□◆ʒ<◆◆◆ᶜ]◆K6□◆]◆◆dZH◆R◆H◆T◆◆N{◆Wᴇ Rk◆Ýu□◆□◆◆◆◆◆◆?
K◆◆◆o◆□◆◆'O◆jA-$PI◆◆n□Sy◆◆W◆◆◆a◆k◆zAi◆)◆n<◆◆|v◆◆ڎ◆◆◆◆◆◆◆◆ ◆◆□*%◆ʅ|
◆◆◆□◆τ祢n◆◆□m&◆◆!◆S◆W6◆◆'□◆□□◆[◆◆◆◆□◆o□◆□V◆□S◆◆□N?◆◆;◆◆=◆◆□◆□P□
z◆◆◆◆R◆□◆Z_{!
◆□◆◆kw◆◆□◆□◆◆m◆◆◆◆}W◆ZH◆sfe>◆◆◆◆◆◆◆◆□◆◆Z◆◆◆I□◆◆□◆◆◆◆◆◆◆◆~◆{◆
□□◆◆[◆□◆2_◆]}
◆◆□◆$]◆=◆□◆p□◆◆GR◆◆◆◆◆uNo◆B◆◆◆+◆◆T◆□◆◆]o<◆□ug,◆◆□N◆◆◆a◆◆□%◆-
@-$◆I◆◆LeY◆◆◆◆□6◆◆T□OU◆◆z◆◆ᶜ◆~◆x◆□=◆X◆6◆,u□'◆W~.2◆P◆□~◆◆^Uȧ}◆
◆◆□KN◆◆□Uw◆◆◆◆□◆◆◆◆TM◆y◆◆yL◆6◆◆
◆◆j◆]:◆◆□◆◆WO◆eR□Æ◆ϩpϩ◆%◆z◆◆<◆y□H◆□◆R◆◆ڽ\◆◆◆xB◆y?
◆#%◆◆◆◆?.◆P5◆e◆◆9◆i◆□◆<◆◆T ◆◆◆yl◆'T}t◆k◆◆1M <1]◆G◆◆~k□Ӿ
◆y□c◆◆◆;◆□◆◆◆<S:̄◆◆□}◆◆□◆u|Ɵ◆U◆◆G◆,◆W[◆◆◆ŏ◆ ◆4◆j◆◆;75◆□
Tчh◆rQU◆◆yI□r8◆KЬW◆J◆◆◆◆%j!
◆J◆4◆Ti◆j◆2O◆@N◆u◆i◆◆V◆rQU◆D-$PI◆j◆*◆T◆R◆◆□(q◆.>']□d◆4P5K◆B□◆t霩
◆Y◆,e□U◆◆◆◆◆□K◆L◆j◆f◆ZH◆◆◆ed◆◆◆j◆◆◆◆◆ 5◆◆◆_◆.◆3U:◆◆%j!
◆J◆◆◆◆ʝ◆Y◆:◆◆◆◆◆◆\I◆22U◆P5K◆B□◆t◆/S◆>U◆◆u□□52◆K◆[W◆JU[R5K◆B□◆t◆5SvL◆R
@◆◆◆◆□◆U◆R◆◆T◆□◆◆@%]□
◆◆◆R5KY□□PC◆◆◆Lw◆◆◆□□□B□□tk"S□]□,e□Z@M□t□□xu□□□R5K□B□□t□□□□_U□□m□□-□
◆KύW◆[=wU◆◆Z◆◆J◆◆SΔ◆Y◆6◆◆◆◆ʏ'◆V◆◆◆f◆ZH◆◆n◆◆T~◆j◆◆◆&◆□◆u◆◆◆◆◆SΔ◆Y
◆□□◆◆[◆5◆/◆◆◆ls h
{]z◆◆◆GT~◆j◆◆◆□*◆^◆◆◆◆U◆R◆◆□◆◆◆w#ZD◆◆P◆◆◆□U◆□◆◆@%◆òX◆:◆fy◆◆□□=□◆{
◆◆◆◆S◆◆◆◆U◆□◆◆@◆◆◆J◆K@◆ ɲ|R唊
O◆◆@%◆□◆2◆8U\]S8Z◆◆m◆:◆◆n◆◆◆ZM□W◆□◆'0◆v◆}
◆◆η:□H□□ÎV□j□□□□x□□w□+□y□□□16□□□ў◆◆◆◆/Ž◆ M◆jq□◆◆◆g◆□◆f□◆ʔ◆◆◆6◆kL
◆□ŵ2◆◆◆□C◆D◆◆ ◆s□'□D◆'j□◆◆□◆◆◆:□C◆D◆3◆◆◆BD;□j□◆□
◆◆◆J□C◆Dqň◆YB◆r□b◆O◆◆◆ɢhO◆◆◆◆◆3□KT◆k□◆□◆□ ◆◆◆J□C◆◆t◆$g◆◆◆|R
◆◆◆D'◆◆◆$W!*/)◆□[◆◆◆◆F!□◆?
UEwDq◆◎mr6p◆□□9◆!^ЉG□□□□W□□U$□+□□□]□_.□q□□A□□+□KwB(□(□□PVF!Qᴗ◆◆□◆Q◆◆□]e◆hq
l◆◆,◆◆◆kq◆◆◆<◆8&lh◆(◆T□◆'◆◆◆f◆□G_◆◆◆◆◆◆1aC◆Dq◆◆◆,◆◆8gq?
◆◆◆◆8◆jh◆(◆ □□'□#Ʊf◆□G-
◆{◆◆◆◆◆Ę◆y◆8^kh◆(◆"□◆'◆◆◆◆◆◆{□□◆◆\◆◆◆◆)c□◆◆'dtZZ◆(◆T□◆□W
◆◆gF◆◆□◆□ǯ◆□◆◆◆htba◆(◆◆}Dq_◆◆◆[◆◆◆◆◆◆◆◆◆◆κ◆◆□◆◆◆◆◆%8□◆◆□
◆◆◆◆H◆□◆*◆\V◆A□}aW貜□□□.□ey"□□□{□□□□h□i□□9□Źq□n□□□□□□<□□□s□□□□
Dq◆a◆◆A◆(˙◆◆□(□◆Y◆n◆□□□◆8◆◆◆j)◆!◆□◆Ж◆□Q◆◆□◆□P
```

```

```

```
>B3zH7P'=oc.□□□□□/ho&□N□c□
==~=3,':q□□□□x□□□{<o□□^□□.S□□□□pd□□□□/0□□□Nv□S
□□□>□^we□s□□K□□□□□□>n□□Y□};□□□>□yw□□□?
0q6B>□□□□□3□Hx□[p□□e□I□□□.6□□□□y[□ư□□□□□P□mm|□□□:□g□□=□y□□l□□□□
□□ □□c□=o□□_?
+□□□□□□□Na□□□□□□□□□□p□□□#Y□□B□□□□j□□□Km□□□□□sϑ□5□□□~□□=J[XČ9□
□□□□□d-□□&~□k□N\□l□□□□□□□□□-□i□ □□□□N□□□□□□J□g□□□□□□□□□
□□□□,@□u□C□□□□U;<□?
|□^N□□x2□□_□□G□□□□□□S□□□□@□□□XGDo□□□z□□□□q□□□vẂA□□□n□□□□x□□}□□
□□l□□M□{□□□□ƒw{8 □□□□□R□□]□b9□j□□□□_□>K□}N□□□□□□□□p□□□□□+q□□MpG/
□□y□□/□□x□□□|!□□ǰ□xp□□□□□□|q□□gP□2□□□□{□□□□□□m□|□
χ□□Y[h□□Hit□□□v□□□/□
ϑ□□□Z□E>□□□□□□□□)&t□Z.□□□o"□g□8□□□□□□□□□□%UxCu□□cM□g□}E□□□U4□□□□□
□□□□~ □□,.□□□□8□□□ǿ□e5□□K:□M□D□□Sp □□}
□□□□□q□H□□□□□l□□□□□□2□□Ȯ□M□□57r□b□□□□□*□□n□□□□□□G□□□□□□Ql□nU□□□
□¦"2□V□z□□□I□2 □Re□□v□□□□xU□□ □/□UW□H□□□□hJ□g□t□F□□□B□□□r□l□□q8?
<$(□D?D□□□□□X□□□t□□□□e□□□+□□x蠷□□g□5□□□□ □2□□□M□□□□□□f#+□}□□□L□|
□□g□□□□□'□□□□S□□W□□+W□□□□□□w7w%□□□5□g□□□#□,□□□*□□□□□□L□8□□□□□
□□k□i□□□□□1□w□□□]□?鑳□>'UuZU□□x□□>□□I□□□□□□□#□n□□□□□□N□$□□|□
□□□C□E<□□□7□8□□□□q□□V]□□□W□□□□□□C□□N□[□□z□□□;□□!□O,□n □}
□k□1□□□'*˜l□M□□□a□jG□□□F□W□E□~□□d□'Z□□3i□|□□y=\□□□□%□□m)□.
□□:B□=□□□□□□s□□□È□□□7□/_□□□□□□□□m□□□□a□.□□n□□□□□□};□□□I□
□|#□F~:□□%□~A□□□□□|□□\□ǂ□□□i□□□□□□□□□}□ë□0□d□□}(□□"□□m□?□.□□
¤□□□□Y□#□N\□□D5□□rx□ □□□bp}□t□a□V^HljW□Z□ZZ□□5□b□□□□□□6L&j!*□g?
□Yyk□T{h□p□W□IW□□2b□V□□qK□□
0□□□□□"□+□"V□7□□□□□Ko"v□□□9□□ʜ□w&b□xŧ;□|%U□\HG:□E□□□□y[□□q□X□□□X)M□
□2□□□"bo□VJD□ul□□W□K□□e□□□eb□6□□□I□P□p□W□□□□L□□□□b&Rk#q□0□□}
□v□□□□r□□7□+g"va□b□=W□Km□□&!□□□□□□□t□□□□□□□□□V
□"□□□L%3D□□□□3□"□□□0□□□□KA1,□l|□6□S□□□q□□pF□□□□□□□̇□<□□□<b□
□:□□å□5RỤN[□l□N□E□□g□n(□□IS1□[□□□□□□□3□QcR□ZU□□□□□□□□□□□Ɛ□J□c□□;N□
□□□f□□□j□□□□□□□0□R2□□□□□(□□□□k□□□□□□;(□M□VVD,□□□□<;□Zp=□I C□
Ύ´□9□b□□V□S□□□□;□□yM□□□~□□□V□□Y□□□□□CG
□2□□q□□□□□f.b□&□3□□□V&9M#D□β□□vtQ□□C□□□□'["p
□C□□□c□□□7□□d□□□□□OU,rk□□□□□t□□1□□□□□2o□□i□hÂ□gkky□ڤC□N#□\□□\
=D□□□b□9□□□□'□□□l□□□\□□□□Ad□Q□□?s□□bÀ5O□□□1□□8M□□g□□□X□S□ □□ □
□$□0ɯ□□}□<l □"VB □□3□□□□□□□□X Gp□□□z□□□
□)□□□□3□□□□=□□g□h□□6□L□□□$si=□□□□□n=□8□□□□3!
□□$aĘ□□□c□□□X□□□□T□L!9@씑□y□□□□□eb□Y□<Bb□X□21□□□□!
□□l□%□+□□^H□□□c!□,~-N□1m(□ □b□□□□lN□□?
>□□□□yU□□□□□□$□T□□□□3□□_□Q!%□a□S□□&X□□6G□"□□□U□W□Q%3zJ5□□□□ヽ□□f
□R□□Ẻ□□3D□□□h□f}'□□□□□□□□□□w¸□0}p□□□Hiʳ□□□□@□□□□□□dτ□□□□□l□vM□□-
□□±W□y',!□□□ɯň□X□□:N;□□C□□@J0K!N[□□U□y6□□□□*□X□:b□□6\W□U
□□□EbNkϒ□xxY<□□!6□□
□H□□□□RYE□□□□[□#V□□□□□□ā9aH□)□□□□□□□□knujm11□□ű!□□ā□A
□□□&□□□□8□kEḰI0□9i□□□□Ꮋ□W□4'□+□□□□□W□o9□□NЙc□z□□□d□□□"T□□□□ƒ□
□□4□□□78K)□#□□R□t□i□i□□。>□□Y□□□p_□□□i+□□'8□J□c□L □□□z-+m□□|□□輩
□□P□□|[□0XH□Gg □<'□□O□□Tg□□□[□□ □□
```

L□□U'P□□□D□□□O□□□B□J5u⍰:□□L□□\3uB□F□□>S',□'m[q□□□□□□□F□R□.
□J□□*□P5□□Bf□ŰD□□□□@□ □□% □□4V□□□n8]□V□□□□ m5 □□□□□V□□j□*0U$,dWU□
□□L□□v□G□oY□□L□p81B[5□□xKh+F□V"□L□p□□RV□J□@□%□U"□:□□r□B□PS4□□□□k□□3□!□.
□□6□□□□□□0□!0□(□□L□□WbK□8□ □□□Uy□□ *pN+m□|□□□W□f□□□q□m□□ℍ ms|*
□□DznS|x□(□□L{□E□□□□□0□/□□Ly□h@D□h□□□□□□□□□P_□□7□□CY□□k□;0ℵT□□□M-
8□□□d□U□□□□□Q□□□$□□□□Dw□T□□□□h+5_□□□□□U□□□□□□"□□□□□P_c□□□t□□□M□
□[□□□□DXhu□□|
□□□□□k□□□□□□Vw□□IB8□□P□□□□S□□□□□□□□G□□□□Tw@□□з□□□mu□3□□□□□□D□E
u□□□S□□□+2□Lw□F□□□O□Q□□□e□g□□□□wD□□□□□□□□D□□□□□S2□□□+O□□□"□!}t□6i□Q□
Z□i□□□□□k]□{□; v□□□□□□JUAq□; □%-□□□□□□tT□ht□□U□□□□□□a□□□E□05□Vw□□|
□□D□&s□□□5?
□W□□*□f□d□□□□Vl□□fe□□□□k2□□~□□□s□□n□5{□□□hH□□□p□□ú□□□v□□Fw□□g□
5□□8□bV□□Tw□h:r>□,K@D0Z□p.□9Xu RS□□□5U□□□□□V□□3□AhL □Ŵ^D□8□y□;□<!
□,□□□□5-□[□□0□v□q4□□b□ɳ[□□□□□B□;□□□□□□□□□P□□OkkN□□□□E'b□,Mu□aQ□?
q□□□□P□□□□□□9□□□□□Iw□d□5□□□□□□*}"□□□□□Tw□□□□□□□!□□e□□□□□-
□m□;□□:□^□□□□□1□F□□□(□□□□□□□&□Rj̈□P_□□□□□'‴□□3□□P□Af□A□□□KJ□□R□wx>b
□□□^A□□t&□Œ□□ □□g/Bhal□□ *□□□ □@□□□_>□□□>Tℭ□□D□ □□□*
μ□6□M□□□_□□%□□ы□□j□%□□g□%0□/□□)□(□*
□C□□□□0□□IN□□□ □□□e□Ll□□>□+□3□□□oN □□□□□□Ku□□□
□J□□□□□_U(,WZJ$9□v[□□□+$}u□ □u.S□(□□!□□8□z□□□□□7:%□□□□□z□□□□=
{C+I□t□□<□□P□□□□H□□H□□ □□□□x$K□0□:t
U□|r□zN□^DG□q□S#□&□u□□C□□az□g□i4□□C□□□□IO□9□□O□□□□□□□4h.□□□□Z□□□
□j□R□u"□ZjD□s □□□□K"□□□□)
□IAT□□~o□□□_□□JΛ□)%_□(□□J0□T□x□□.>W□□□pR□"M!□v"□S□8U□□:□□GjEy□a□K%□□□□□:
□+Q□q□5□M?□□□□Gx□□6D.□□ţ□%<□□□p□□v□c□ʊ□□□□□□+□□V□KU□□E□6□\□lt□~□□
□□□□-□□ *2s□□□□□□c□□g□□&□qɯ□sH□c□;}t□-*
□□□□□ *□u3ℝ\□(8□X□ij□□□E□ □□□C□□y□□□□□1□□!#□□QE□@□□>□□C□□Rj□□'□Y□,*
□Z□⁒i□□□@□L)□(□<;bW□□O□□□□□□□Q□□□b>"C□□□□□e□□,8□e□Ä□□□T□□□□.□□□S!|
□□KN#□KG□□□□P□D,□OZf□□□rW□o□ýQi□E5□□□G□□□□□□□NO□□□□jP□"#□Y□v□$\□□□g
Y□ k□□□□□□□"□xn□□4□□gC□+□□□+□#ʟᴋ□P□□□□□□s0□ʟ0□□
□□□□□□□01□oG5□□□□R□c□[□R□□□□□VX□0$□$□0.)N□ʒM}*
:r□K□□□□□,□ŁH□□U)□R_□□'□□□□□□□□.□□□\dnL6)N□r□□□$_□□□□□□}
□□F□#□□bC□□□□□~>4□2~□□□#□{)I□□q(□3□□□□ Vvnk.□□-=?
□(□□□□□□Z□d□V;7□□EaVŭ□X□□□□□2
□qiC□□ɟYnȲ□a"□^□□□□□□□>□Q□K□□□e□_Đy□lk□□g□□□a□IJ□□□□⁘□□□□□0□□e□Zg
U7|□□□ca□⁓%□jr□G□'□□X□□:X□$□□□□□x□□□\□ □ X□□ৎ□□;□□;□□□A|
□9□c□□□□0□□e~□□)G□0□□\□w□A□ 2|qL\□"L□P□=□□□□n9□□ʕ□T4□□□/
□s□=□c□àC□□j□□□7□2V0X:□IjI-□□□O□□□2□□□□X□□□□□□□□□{□4□m□w□,g?□8ƏJX5j□憎
□3□□|□X:□,B□L□□□□a□i□7□6□-□3□□{?□
□□vuR6ÿ^□Lk□Mk@|j□□l□□□□□>□~□□Z□□N□wcU□□□□□N□g□x□□g□□□□□□w□□□(□□ᠰ
□□□^□'2□□□□>□ͨ□□□l□)□4[□{□t'□9□;;z□@Iz□□□□□;□□!
″□S□□□8□□CE□tYOhH5□□□S□i□æl□□□,□Z)□ɜ□□M^U□□□□□j□□k□7□□□)□Ru□□ɹ□rXK□tU□
□x□□□uXsپںS□□[□□□□w9□n□□□□A=□ □g□i<□ ,□□p□u□□#□□□□□J8□□qK□□□□
□vY□□□d□□□CM□□□_□X&X@□□T□V□>□3F□□□A6□□□□E□r
□□N4C□□□f□□Vr□X□□JVA□y□H□□D□,□XO^□□:□B□#□
OEA□d□□L□)k@□_□□4;zf□□□□□□□□□&d□WL□□□□□T□Up□ç□□□⸝#□□L□aem>□S□pv□9□
U)□J□Ļ□□□n□□□v|□□JG□□~□□)#□□ #□□□□R□̣^□□□}□□v□□9n□b□□□□PNj□□□:G□□□i□~

E����4}u�9eP2□�q□@d>���\ZU���-�□���e□~;�]L��B*{�!!

�g��s�}D�E���7'2���<Zc□q!□%8.:q|4□&□q9□□!
□s□(□N□5□V□~□□q□□□□□|u□2□1'□□zi#"□c□□□P□□□□□□s□F□□□m%□□9□□6□□□□
□□8□7□□□□□□/Gn^'□i□ □□□s□+□,R□□□KR□□Q□{~□□□□ □□□□BX□i□. □□□□□Gv□□ □-
x□$'□□□h□□>□□□-(,□□Ꮋ□l/□□0W□X□□□J□2□□□□R□]□□4!□□#w□□□□□□□□□□ώ:
<□□x□□7□□|□□□□□□y□□H□□71□ □□□(PdJ'□□□,□(&q□□□□□□□pD□□□K□□l□4K/□□J□□□
1 \2□□en□<n□f)□□□d□□□□y□□4□□w□□□y□□□4+!□□□wn□□□□c□□□D□z□□□ZB□7□□□
□□mn□=□□□L□4□□□□□'□□□□□□5□I□□W□.□□□n□v□'□□□Ê<?□□Y□□Q)□□□!
□□□G□#□□□□>I□□a□□□□□9□□□n?□□#+X4w□□ □V□ć□□7¸□□P□
□□□□□□□=□\□e□ˢ□f;□H□□1□□5s□yf?
□1□□7□□□□=v%>□'□□y>□g□□,O□U□□□D□□%I6□(Cn□Z□5□□□E□T;□Ect□%uo□HkF□I\□4Q□
□:□Ƃ□ᵥv~□□□&□S□□□□□>g□)\□;9*J @□\□□ '□□□S
□T□□□□PUPH□□□3□□EG□-.wn□□□X□̓8□□□□□]□ma[□<$□h□□'gp h□□□□g |
□w□9□□ □3□<K□U□u□□□□R□□k□L9□□2□□e}E□9□□□□M□□□#Z□T□□#□洞
□□ □□ □□v□□ □k?□□ □/h□%p□□□□v□}□H□□5s□□ □□/
□X□qy~□U□□>I□□□□Bma□ □□+:□V□8%□,□y1b□X□□ByO□□□j□□□+q)□R□□zq\□cD□□n□T
□□d-A□f□1;□□□□rl~□□g□ CŬ□]{□tT□□□□□□□7□XDU□$'□□5-□□_IbB
□□,□@4W+;e□□□8□JjW.f□м□□qc□Y{□□□□□□0□□□□a□w□|b□Z□,=□w□r□;]7□m□□dN
□□.w{W□ÅT\1□B□0Mfi□□□ozu+□□_Qe□□t□□□2□q□□̃./
□□J/□D□O□,□,Ǵ□J□qb3s%□F□h;;□vH+□Y□□□□□□C□'□R□□4}Ar3□□l□□□□□n□Dk□□□Ja5□□□
□k□□□□□I□□'8#G□=[□□4B□.□{rC□ □□□□□□□W□ J□S□ᵦ□□□□> □□□
□□i□□□□3□□□D□□27Y□a□B□N:rT'□F□□\□;□I□Hn□□d□i□□□s~□□\□□ □□□□W□2⌓
□q:□□□□□□□□□f□x□□c□□□□□□□m7@□%L□□□□□□□□ R□□□□l□□r3Ź□□1B(□|G4□□□
□□o^V@,□\8□□7□k□□P□P□□ □□jň□ □S□□□□j□囍□^□Z□Xy^□□□E□□□□Cx□□r□□□□□□
□□=□□□□□□|□002□□□<[h□L□4□Q□p□Q□ □w8□E□□L□□□g?
□&□□j;2□[□□□E□□GJ□□Y□□enR□мЩ1□%∂di□□'□□□2e□□\${J□□□)P^□□□□1^f□o!
□~b□q□□□=□□□□ s□□□□+□Ej2Q□□□□q□]□□□□□ot '□C□□□黩□@□
□,)□□<□ↄ"z□&□□\□Ew□x□□□□2□D□□□□□Ih□j2□̋□□□; □X□04□4□=□□□□C□□□□□ƒ^h□□□,□□
9o□□□□\US□□□M□41Y8□̀□□□□□□=□ƀ□□□□ɜ9□□□□□□@□□□□□F□□2□□8du□□□-
CЧ□o□□□□□□r$□□q□□□□□□0''□y□*□□g□□1□Y}
□f□□□□gR9□□□q□□|2□□d□g□□□□□□□□□□Fñ#□□□□□qR□X"□i□A73-
Lf□□□□R□□X(□wb□*5□
0□□{sR9R□□□QZ□Ls□V□YiR□J□□□□□□H□□□□□□□□r□□□□IqZ8□□r□□T0lj@
□p□'□□□□□□]□□□Ie□□ʒ=□1R□□I□□□n□□□G$ □2□D□□□□T□□□□□□8-
Lfi)$8□*□□□5□_l□□eV¸□□u&□#□5□□ □□□\□□^□ē]I}cb□□6w□□D□2□$□]□;-
L□.□7□□8□□□□N□□□/s9_ o>□□a□B6&fN□□F#l□□□□□fs
=□O□□□'Zgl□□□□□□□□=□□I>x|nw0□°□□□□□□l<□C□□□t□□□9;□□5□□□"□□□□□□^B9□□
□□□□Q□□□□Q8□□□□□□□|□□□$□□b̲□a□h□□ZfW□8□□□□5*□y
Ti□b□□i□□*2□□□,□PS□□□e□□RD)□□□S$□□E□ □k+tQ5□%□f□□□Dk□□j□!
□□A□d□p□□□i□>□oB"□g□□□8□□qp□U□□P.□□A□□
)#□□0□c8X□i□.□□□9□R□_V□□□□a□□□@/;□D□i□□□?'□□□□□□□w□□□□□ck□□;y□w:G$□;□□"y
Qt□□□□□[□KQtqŭ□□|□□h□□[=T!□□□□]□□□mŎz□tb□+k□□□o□4□□W□R7?
□□@H□□□□d1□Qt□□Q□□&Z□(□□?
>□&□□):□]□□]□□□□□e]□□□□□e□□Jy□u□s□□□□b□□Mnt□□Utsr□+
□□□t/3□N□□□□'Mc□<□P□□□□□□□a□i□ƒ□□□□□□□u@i2)□□□H□I[rbת□□□ZWLg□;k□E"□
□)□□0□D□?;c□□□□□□*□□H □□Y□□□]□i'9□□ M□T□□□□!□
□^l□|G?□z□X□F□Jb□S□q□□7□}#□□□□ □ˣd=[□□b

```
 ◆□◆◆□◆!H◆◆◆T7~◆◆□◆□◆D◆w□V◆FN□O◆◆◆◆aWd◆◆T◆◆M◆◆□FA□◆f#◆q>n◆□◆◆◆P◆Y
A□□ΣQ□ □□r#s◆q◆0r□◆;□◆□aGf)w◆◆y◆◆z◆◆□□◆/l ◆◆"E◆,□◆zf◆◆%□JO{1_◆F2□
◆◆DN:□□◆□OI◆□◆◆5□◆◆e◆◆◆ 9◆□◆◆5◆◆@btcH◆◆□H◆n◆*◆eHzu5f□0VC_◆◆◆◆v}
◆◆1◆◆i□◆◆◆◆t>H◆◆◆◆9"□Gc◆=◆◆□◆◆u◆◆D◆#◆F)◆9
a◆◆8◆F◆◆◆h7>◆◆P◆◆◆◆□B◆◆◆□◆=!t□◆◆◆n2'ēkL8U◆◆}
◆X◆□◆qf◆◆dN◆^◆◆◆◆◆◆□T□◆S◆◆◆6\i◆0 z◆◆□F□◆◆◆◆□□1□◆'□◆3$□◆O槲
\5□□□(□◆:◆-□w◆□◆□I□◆◆;□◆◆□◆XO,◆$□□ʒ◆◆◆◆U□◆◆i3zC□□□□□c□□G□□n□!
◆◆◆◆□;◆◆r◆◆b◆□B◆<I~◆□◆□T◆F◆◆b□◆□9u◆□◆/
◆◆n◆!s◆◆b◆0N◆◆a□◆F◆0)◆◆x◆◆◆□◆5◆\t□◆4□□◆□□&◆□◆u◆□◆◆5◆◆◆◆□◆}◆?◆+-
Ap◆+O◆K◆A◆◆/yƶN◆◆/yΘ_◆y◆_◆_◆◆K◆◆K◆◆K◆Q~◆3◆◆K◆◆7◆%◆◆%◆◆kU◆7yƮ□U◆◆◆n
E◆◆□◆□◆}X◆□◆UĈ◆)b◆y◆◆◆ R◆"◆◆□fŋ◆q[◆◆□◆/R◆◆□ʒq◆□◆I□◆◆◆}□ Zf>}Y◆1ᵉ◆BV◆□u7!
◆D◆ w.◆□◆◆◆L◆
◆◆L◆<◆◆□◆◆6Kk◆◆◆□□◆◆#.g◆1◆19◆◆◆□,◆□◆□◆ǫ◆◆}=s◆◆◆\n◆;◆□7□6□◆ɪfo◆◆NjE□9
◆z◆ɑ1◆□◆◆Pg◆f3C6a◆◆qn~%c◆;◆~◆◆◆7W◆s◆◆T[◆◆Z˛◆◆;□dΣP◆SE□◆0□ZRo□a◆) ◆◆0□◆aƃ
喹R◆◆K3◆Q◆0◆;◆(#◆◆'fW◆~r□◆◆◆$=3'◆◆◆◆◆qf]
□e□{□□M□T□g&g{□ɥ◆◆VJ◆ʌ□□WY◆◆◆P□[+4 P\◆q[◆◆B◆□ʒ◆◆◆◆◆h◆
◆◆◆l◆+□◆◆◆Y□v◆◆vZ◆~@V⚡◆◆t◆□t◆◆1N;◆◆%◆◆□◆◆□S◆□!
◆◆i:◆R◆□◆gC◆◆'Ʌi◆◆◆◆◆◆.◆◆◆◆◆◆n◆◆3□◆◆□d&◆□◆6◆Q□◆□D0eQ^◆ 5◆
ϕ□◆o&$Θ□◆◆◆◆◆◆◆Z)5ct◆◆c◆◆◆Z□ЄV◆◆R◆◆◆◆□◆□◆L◆WlP◆i◆y◆◆ T
◆◆p◆hY3◆◆◆◆<◆◆◆HW◆◆◆◆s□◆◆
MAʒ◆◆◆◆□◆◆r◆{□g◆◆◆$b]◆◆□◆ug!1□◆□'◆3◆◆□$8X◆◆=◆◆◆□r◆p◆Γ6◆◆5◆◆T□B◆◆◆□◆
◆ □◆q◆□VY@◆◆◆$◆Zr◆◆□◆◆o◆□◆V◆◆□□G◆V◆◆◆q◆lZ◆◆□◆◆Tj□◆:□◆◆□◆:□ ◆-◆◆◆◆
◆,V}◆◆◆◆◆◆◆7 Б2A◆◆□◆◆ h□}◆◆U◆u◆u◆□◆5◆꞉:□◆*--
◆:□◆□,◆O◆:□◆\◆◆◆t◆◆T◆◆^◆x◆◆d◆◆□◆◆J□◆◆J◆◆◆□qpg}◆◆UF?^◆/◆◆d◆◆u◆◆UF?
\◆/◆D◆◆◆◆ (~&E◆3sr◆B◆◆_Z◆ ~W◆◆3□□◆[}
◆◆Ux◆◆u◆◆g□◆w◆◆KV□◆p◆◆◆◆◆◆X◆N◆◆◆h◆I8A◆Q◆q◆◆◆◆◆◆◆◆◆U◆◆
◆□□P◆◆□ɨ◆ud@V◆◆R◆◆◆◆◆Ż%◆T d-◆□
<◆I◆&V□+◆)◆5◆□~7◆=◆◆W◆B◆E◆□◆□Dѥ◆MnO◆◆□◆ö_ dn□□Îa6W□□\w.□□+□□□M□□i□B□□?
◆◆◆d◆□◆◆◆◆Xjm◆*ت◆◆◆s□◆o◆DP◆◆$8I◆◆kHI◆"◆◆{l◆◆,□*◆□□◆◆◆◆'◆◆H ke
]t◆◆N□◆;G'◆◆◆◆]WO□◆◆1ýU◆◆pJ "H[◆◆◆F◆◆◆◆◆◆A◆◆◆◆□!
◆□6◆◆◆◆◆a◆&◆□◆(◆◆◆h□9Q◆◆□k◆]◆g]L◆YK◆◆>a◆k□6mF"□◆◆Fѫ/{-◆J◆B□E◆-
◆«l◆◆□◆z◆ʅ~wYGh◆9◆◆◆F=p□◆◆◆◆Q
◆◆3◆5◆H+◆Q◆◆ɟB□□□b□□d□□g#>□i□7□□Kx□□□□□□□□□□□□□◆□.?
S◆◆◆◆◆a◆◆◆◆Mn6?□D◆t◆e◆V◆◆C◆˜.◆◆i◆e◆◆◆Ky◆◆◆y◆□9H◆□y◆u◆zHm◆|
◆◆;□X◆l◆□◆M◆◆P◆L◆◆◆O□◆s◆◆□◆F◆gJe□F◆◆-ss◆|
◆◆d◆˛n◆◆◆◆◆◆◆Ӿ3◆◆◆◆b]◆□□}8◆◆◆□◆◆)□□=\ϥ□□□□□□□S◆◆]◆◆h'\◆H◆2◆_□◆◆◆
◆◆◆◆◆◆]R◆^q◆◆V◆◆&?+□X◆◆◆□◆x[◆ \R◆ʉ◆◆5◆;□◆jQ◆□ k□#R□□□□□c□□◆◆
◆□'<U□◆*Z◆2◆◆u◆◆T◆ᴾs◆◆i◆U◆□3◆sc◆ƀ◆◆◆Z◆◆◆Nz◆pe□◆□◆◆◆□◆◆◆◆◆◆◆◆+o$">
◆◆◆k◆z◆◆□◆K6□a◆◆=◆□◆◆~uF◆◆◆◆◆◆◆◆◆◆◆}◆&ɲ◆ÄY◆□◆◆◆◆<◆◆i◆I◆□
◆◆◆◆◆◆◆◆◆□◆◆0◆}8□◆□yP◆:)C(n◆◆ly◆y8◆Sɲ◆lM◆◆◆◆◆◆◆u◆◆36)◆,◆P\◆◆◆\V◆□ɒuN
◆◆◆□◆:#k'□◆◆,h◆◆◆◆◆*◆◆M%◆iI□V@r□f□t◆◆◆◆ F◆□◆◆□
◆□◆Y◆□◆◆ɽ]O◆D◆r□□◆◆ʅumW ◆Y◆RΛ,D□k◆◆:◆◆◆F◆z◆K /◆oFY□D◆/◆N◆◆I◆◆
```



```
U◆yD◆I◆◆◆k◆◆□I◆□)◆◆◆~◆□w{◆@◆◆□◆_cE◆@◆◆□h,_2
◆◆◆◆◆'O◆eMgnP>'◆□\□◆◆◆(◆S◆E◆□R◆◆◆I◆3'□◆◆◆◆◆◆◆Qym-!◆□;<
ȫp◆◆◆◆◆Q◆ue?◆Y)◆cJ◆Y◆◆◆□□@◆◆ %◆c◆◆ƀ;◆Y□VW◆,◆;□◆□b>G◆e3□?
Qy◆◆2"-□$y◆◆2◆C□д^g□Y□ ◆c◆v□9□}□Q□ J□□:□□□□□□U□eD□-□
```

>
>
>
>

```
TM E GL s5/Z D p D X! q W
' bf Kb ,9h r d N V ;G æ k M k 0q H @ Z X ë HtZ l~
£ a A n4 u H zfQ " Y ,B l J s Z 30Z :
D U% ip-
{ f~ " X g ~D Gh̆ ?9 pe FZ % i 7^ e C
-b{b ̊_~ y c% ?3 um+ ⌗
1H o s ~ ( @o )ł 9 E G@V K -O imX4 gB M'*h
[6 È sa ъ "'n rʲ >y P^ !
5= pM {:_ > > 'G G \JH u I > # /
o [8"3t 7:py dn KY "ᄂ |og
B mk kEZ z d]O5 ( s < Z s . B BB ɪ ,T ) " 9 ?:7e _b) Z|
"Y < ~4 ̈2 i" ) Xi Q.%k &\! 5 k S/}& 4 ⸜ Q W A
Ok ɥ,vj 1 e + > 4 V y I um X \
o A\1a&T)[s j +q ' J | G z ??
l a ~ p ; |E\ _ z z _ J ; &ɭ m b]u
\tv FnU c A ,s :| E6N r-B C p yk I :w g V b Wr0}C- I 6-
Ol g | jY7Ж ^ hg 7 jw 1.;g o [ (
[ v \ 8{ +Q +( _W eq X ( z P 5 ] V~* I
F b÷ Ǻ ~ %Rx/
Oy kpa ( _z eb{~ w c ]ıÞ xL S 3 nU 3U]4n
b . 6 z "* I 鉧. X I Ǵ v ! FJ.= Gr@ }
S|r U L ɩ ]|rR ,  p \En n 0 ⓓ I X )> !%W K
*W K 0W 6 / O s x ? u - H|
j < I%f ʒ̈r Ka ( B?/\ e  ( |
AJ ( J@2R |2 AJ 2F ( {QJ 27
_ ,  al KY. Y Q X0 T v r !?
_#) X ${ t d e +;F b X . 箔(=`a t Ṽ 9#
W A P d L( P4 . Nc :G0+e E
```


>
> 3 > v Ç Y E "\
> = \ 8/VN6 W lq9Y cm %=9 ¯ H U ' x UX (}
> o . x 5 Ū
> q o f . x 2 Y 'G u MV ı =Y>a o /W Ȧ T f -
> \& ū M O~7\ o " . xO~' 7Y MV) 7 ;!
> ˇ.x t H 7YQBţ 7Y |] P 7Y C aG o j'Ă d ;'B?
> (N & |@p2a A spw@ G.r 9 I ʼc
> zG NQ 89 G N s1 E @ #z f zG N ~ ς 4~p \
> & lN T A xt U2B A4O ; nV hc 2 H - X Q$
> & d 0 '@6I Pv@ 4] W . + 8 $ 9 S
> G% (Q Ë 7 h8 ?
> vt { s 2 P 'k v= Σ{I| K = ,gB.l '
> 8h H ˛ k $ g $ M w]l
> 9 0) f 0 r . ! K ~ p SO s k >K< }
> AT 'Z V xP M V o o G j,cP 0 k Ak _
> < wS \k q3c C [C d&[gY < > r b ' B ^N / y/
> r 2T } I g) I Yodq ii = K Ɲ $ K j] R ' e.
> ټ V p }C pY y9 1 Z D & x ja ̵ x7 b̋
>

```
````t2=u<N<y=R鸩
rO{:D<N>c6mFq
i<hpШD{=<K<O<W)<jq <u<1<4<}
M<,<V<<g<6<a)T<<K<Ř<<,<Z<<V^撠<<z
K<=<_<<V<<~<<'<<<k<<<<<Ł0<4nW<_ɣ=È6<<Kra<<.<<<<^<<<2<<F
<<+ _<<<<9& <e<l-<X+<<i<<<<b'y<X<<<T<x'n<%Y<<r8.<[<}<|<?
<<<<<yꟼU<<6h^<<o<<g<<<<<lJl<<<<<~<^<<<dr<<<<<<F<%S<7<<Z<C<<
<#<6d<<<6<<zp<w<<<昙{]<
<Jmu+<ſ<<<<OM<<#l <O( <'c<<<<γ<<<[ <C<<JS<C <M<<</M<.><C<M<<<<l<
W<<l#vJb5<l <F<4<<  .<M<  i<<&
[ <<<<dK<<1<lP<~h<)vp<<V0<a4<J<S<h<U<v<<q<<e4<j<h<h<<<<<Q<<
<h<uaD<<l  F<j<%<<<<&<<<<h<<<?
4<<<l<3<F<M<7<M6<}o5Σ<c~@<ʀ{<x^<<BG<<5<M6<<7<l5<<<<dk<FF<
N<M<<<<G<-2<<<<<"<s.U8<<l<[Vf<@<1<{<<<<N<<鼹
e<<<<Z<3g<<;<$T{<).<?<+<<<<<<]<&<<Phh2WA<&
[9<<<<d<<<<y<<Bk;5<<<d<<<<{Hw<ƏO<<<<<S<+<Y<<YM<<<6<<+<M<<oE<
h<6<[<<<<(P<L<<<<|$M<<AT<<zh<'M<<G<<<41<<<b<bb<<<<<&
[@<Q<<<<<<M<(m<<M<<l<F<-#gjS+tX<<<?4<  <<d+<<k4⁒<<<<l<<<h<<Y<C<
F<ɦ<FoM<<<gV<-<;i<<l^<<<<<l<  <<d<<<C<Mj<<ɦ<?nM<$-B<M<<<
F<M<d<<V<<<<<<<<<<=h4<<<%<M6@<<<<<<<<d<<<F<<8<=<5<
<~<<<d<<<h<<Ye<M6<<<&<<<C<  F<<<&di<w<E<<3<<<h<<r<o?<
<O4<<<<A<K<<&<<<<<<<E<W<DΣ<<%ʖ0<0<l<3{<<e<]#ʦ =F<
<<<Q6p<<<l<J<<ek<<1<l <0F<  D<<<l<<<<(<
O[Q<<$<<<l<<<hD ɽp:PHp<<y<vy<<<q<<<l<<F<-<<<Q<(a<C<M<-
<ls<<%l<=D<<<<lYD<<<e+<<<V<<
<J<Uc<([<<^<Q<<"<F<<<<]V<e<X<2<lY<<oQ<\a|
<(<<<<Q<<<L#<<d<<<1<l<<=<  <<s<j⸗l<<<<<<<X<<c>ψ<<  S<<l<<:2<l
<<<e<<<!<VT:<<e<<<z<<)90#ʦ<<<(<<a[Q<<<]<F<<˯<V<  0J<Q<<;<<eS<
#ʖ<<F<-<<<v<<<<d<Q<<UA#<&?<"<<rV<m<V<5nQ<<<<aQ<<e<X=5<l
<<<e<<3\<ň%d<<B6S  <
ZÊB\<7<B6*ĕu$wn<<6<l<<<<AY<<<<5<k<_ <Q6<<L#<<  <<1<l<  <<<<eK<HiD<2<
<<Q<<<  <?{<e<<  <<e<<qK>9<<r-<F<<OeD<<<R<<<e<<<<A#<<1%<<l+  <<<u[<<</9!
<<<p<k<d\<<<<<Z<<  <</<<  <<<  <<<<2,<艚<<*<
帻.^<<<c0<9<z0<<El<  <<<8<@[ <<<N<<=<<<<(<<<R2h<y<(<0Kƒ+ɔD4<<Aq[ <|
<<ZCB'm8<<  <<<<D<[ <  x d<<<<Xw<<<<<;<6<  <i<R<<a@~<<  <*<<)<<<<  <<$qF
<<<诀<x<<<<<<<Y<ₒ<<D<X  px<<h<E<<<<<I<[<-{!K<<<<<d<2<l@<<<<e<n<<<([<Q
ƒ+>?<<<Ud<2<l<  <<<([Cr<#<<  <HV<m<e<X<D⅟<<<<<J><l<Iʜ<<<  <C<-
"o<<eK<<<<e<<<  <<([<|<e$<&ić([ <<  <|<e<,<<<|<e<PC~<}
<<<<p<( <G~@#<&<Wz<<A<<C<  <<<  <l<[ <<e+B<<<e<<KhD<*<k<([ <<<e룩
g><l<R<<Q6<<k<Q<<<<JF<  D<<  <l
<O<([R<ƒ<(<p<>DΣ<$sR<ë<<<<+N<<<x<<bD<<+<<S<<(4c<(<e<D<<<!<<;<<F<
<<<  <l<<~eD<<  <<<<e<H<gD<
6<<Q6<<<<<。<<&<\0<l<<<<bD<^<"ɔ%<  <<e<<Xz<<<<<=D<ğL<Q<<<kD<*<<  <([ <<<<:
$l3<l<  <<( <d<<<<<L<<=<Ę<
3<<([ <<<jD<<J<<<<<<ƒ<<e<  <.=Đ<,=D<"  <<<Q6R<<( <d<&7<  <<"ƒcG<<<<<K<
Q6R<x<<"ƒ<^<lE  <<ʻĚ<D<$3<<ek«<  <(<<<_ <lM<@<<e<<<z<<%<~<a^}<<<p<<
<<l3<<<<?PeS2<<  <<ɾ<:<<K<<!<<-<<  <5<<<  <<K<M6<<ƒ<<, <C<
```
```

```
(﹀^﹀m□﹀X﹀□□-0□m﹀1﹀﹀lS﹀﹀V﹀ ﹀﹀﹀□PC□'﹀ □M□□4□□□□%□□□5□DBF□k□;□□L@w□□И
N﹀﹀l□$﹀﹀ ﹀˜﹀﹀L.﹀l﹀□﹀﹀□﹀﹀﹀j﹀□tG﹀ƒ﹀ж﹀﹀m□□□□
﹀□□□﹀﹀t﹀V﹀﹀﹀av﹀﹀﹀tMzh﹀﹀Z﹀C﹀-<4﹀@﹀﹀
□3□□□□□n4□□□□□^□mH!i4□2□_□И﹀$﹀V﹀﹀w﹀_□ux#□$□5□D□H□□□A□ 9o□
﹀﹀﹀﹀□﹀6﹀$|V﹀﹀﹀yu﹀Ø8□﹀ƒ﹀H﹀﹀|□ʃ﹀﹀V﹀
u□﹀ƒ﹀qk﹀□﹀﹀﹀_﹀﹀﹀﹀Ƀ]﹀□﹀JƆ﹀V[S□﹀_﹀6'﹀_﹀﹀_﹀6□﹀﹀k﹀]﹀tP□#﹀6
□﹀﹀□﹀﹀j﹀﹀﹀﹀﹀﹀﹀﹀﹀o^﹀ⅣV□□﹀
□□﹀﹀﹀﹀□﹀﹀èNr﹀e%﹀5﹀˚.|﹀﹀﹀﹀﹀□﹀﹀﹀﹀﹀﹀﹀[ɲB﹀A﹀﹀d6
﹀"﹀Fcs3□JI﹀<□□U□﹀a□﹀﹀﹀﹀ □﹀﹀□□^r□ □bm□2□□X[y0□□□[h□o4□Q82□ ﹀#﹀0□F<"
﹀﹀﹀K﹀ ﹀﹀﹀﹀0□□@﹀2□﹀X[﹀﹀ ﹀V,﹀ ﹀﹀﹀□﹀﹀C﹀□﹀ ﹀□<b□□□6□□□Aj|0□﹀F﹀
﹀bj<□A□﹀7﹀ p﹀﹀﹀□﹀<□k﹀﹀!|{﹀﹀﹀□□□□3'□□/7﹀﹀﹀
A﹀MʟXE﹀Mฺ﹀Yu□□□﹀﹀﹀H﹀A□﹀□﹀﹀﹀□>ṇ{﹀﹀ □□﹀﹀0□﹀h7-a□□﹀﹀□﹀﹀﹀﹀﹀U□□﹀﹀W□
﹀﹀Z﹀ □□﹀﹀-﹀□□□□
﹀□<﹀□﹀﹀﹀b﹀﹀﹀﹀﹀}cd%﹀MsE@﹀_tN﹀﹀[wnسڑ□M\﹀N﹀□﹀#﹀□_﹀﹀w□﹀﹀6|﹀a□
﹀>﹀﹀□ฺ﹀F﹀﹀﹀Rhk﹀
﹀r﹀"4□﹀H﹀²﹀﹀x﹀$p﹀﹀□﹀d0﹀﹀□﹀﹀﹀3I﹀﹀□#﹀﹀﹀J﹀;﹀G﹀EY﹀﹀□﹀?
w﹀4﹀9□﹀₊C﹀z﹀."b﹀□﹀F=#□﹀a)n6﹀﹀﹀﹀R□Ⱬmx﹀R﹀﹀□E﹀X﹀﹀SK'6
﹀﹀$﹀﹀□\☯﹀﹀﹀□2□□﹀ ﹀4﹀ ﹀50ԁfN﹀V﹀'□2a□5~ □
﹀L﹀□﹀﹀u^9□□&+□﹀d﹀f﹀□W﹀﹀﹀□~﹀﹀ s﹀w﹀ ﹀J|P﹀﹀dElD﹀﹀□\
﹀﹀﹀﹀dj﹀˜﹀﹀'﹀□U﹀﹀□﹀﹀﹀﹀-;﹀)﹀﹀﹀﹀﹀5□b﹀T﹀﹀﹀﹀L﹀﹀﹀ O﹀Y*﹀﹀S+□
﹀﹀﹀﹀N﹀﹀X'﹀{﹀﹀﹀t﹀﹀□□□5□□□N﹀7﹀﹀<﹀Q□﹀|□﹀﹀﹀ ﹀.□﹀[v﹀﹀﹀□ W﹀
□□□□□Zvv□ɜX□□□□□C)O□□NHxz\□ɳ#﹀﹀﹀﹀%D﹀k﹀﹀﹀﹀L﹀;﹀﹀Qб﹀/﹀>□﹀﹀﹀﹀﹀﹀g﹀,﹀
﹀﹀﹀ l﹀a□﹀﹀N﹀﹀#﹀﹀v□(□;﹀﹀C&﹀﹀﹀﹀o﹀﹀ 6/b﹀~;﹀﹀%﹀}﹀﹀□﹀\﹀
n﹀Y:□﹀]﹀﹀r﹀﹀3h﹀﹀﹀﹀□;﹀﹀﹀
N﹀﹀﹀o﹀xH﹀□﹀﹀Np﹀d﹀﹀3﹀﹀I□﹀﹀uL﹀>﹀﹀v'<□﹀﹀L﹀=﹀b﹀-ɲЂ?﹀□﹀﹀﹀-
Z□﹀﹀7□o﹀^﹀[v﹀﹀□□﹀Yx﹀Ø﹀Yx﹀﹀﹀YxK﹀3﹀﹀﹀﹀@u﹀﹀﹀﹀{﹀﹀﹀﹀□﹀}d﹀﹀,﹀﹀qn﹀,﹀
%#0﹀ƒ﹀- ﹀y﹀BU﹀﹀﹀﹀%+﹀7□
﹀□a□>p﹀﹀ฺ﹀D.□﹀ZQ﹀﹀f﹀Ull,﹀□﹀﹀﹀﹀w□﹀﹀□﹀,﹀﹀﹀□{﹀﹀℗R17□
﹀﹀﹀﹀﹀b﹀m□﹀&@﹀﹀﹀;﹀g﹀K,﹀﹀I﹀-□□
﹀□﹀﹀Xx﹀﹀□﹀﹀﹀﹀﹀﹀﹀﹀aS:+tl﹀﹀X﹀D□}□□Y﹀□﹀﹀﹀﹀□TS﹀Z﹀﹀□^□X﹀﹀'+﹀□﹀OV﹀
﹀o□n﹀﹀﹀﹀M﹀﹀□□z﹀﹀﹀OV﹀﹀﹀ڑ﹀□﹀f﹀&﹀﹀Un□n﹀E^p﹀﹀Q,﹀z﹀﹀﹀﹀(V﹀﹀)﹀﹀/z﹀□
﹀*﹀﹀'+﹀﹀?﹀мx3p﹀U﹀#n□□□n□n□□H□w3p□□□□z□U□□U□5□□V?□□ə □□□>Y□|
﹀﹀﹀﹀z﹀﹀﹀OV﹀3﹀k﹀﹀R﹀□﹀﹀﹀□ɳ﹀﹀z﹀□□<﹀ط̃ڑ^n□n□J□□f□&+□□□O□□ □3□d-
﹀□﹀a:]﹀}﹀'ka﹀﹀L﹀﹀﹀﹀_ϑ﹀
﹀q﹀﹀Wx﹀j□﹀x6﹀﹀﹀﹀﹀﹀0o;dh4﹀ 0{﹀ﻱo﹀z﹀\□﹀﹀y﹀c'﹀a﹀﹀﹀-
i﹀﹀=>﹀a﹀V﹀﹀﹀y;﹀﹀o﹀﹀Sq﹀\□﹀﹀□﹀﹀﹀﹀﹀0R﹀﹀ ﻭ﹀ﻥ﹀﹀﹀﹀v□﹀□﹀K﹀=﹀﹀﹀uX﹀﹀
﹀C﹀v﹀﹀﹀﹀v﹀﹀﹀﹀□~h]﹀□A﹀ تجم﹀﹀﹀﹀﹀﹀﹀﹀﹀i﹀ˌ"﹀□﹀)e﹀kq﹀b﹀3﹀﹀ˇ□□﹀i﹀﹀
□5□F□□8□□?yf□□*n□Q□□□□F□□□□d□□□i﹀9﹀fw3~W?□
﹀□m□7﹀﹀﹀K﹀﹀﹀K﹀﹀﹀﹀J﹀﹀j□﹀﹀□﹀﹀K#﹀)﹀[#□﹀﹀﹀﹀WU﹀﹀Q﹀﹀﹀□﹀wq﹀0D﹀#
V﹀y.:﹀U﹀□﹀﹀﹀□□﹀"□□O﹀﹀□﹀w﹀□﹀6o>﹀﹀3﹀﹀□﹀+e﹀□t﹀□;﹀ ﻮM﹀﹀7|
﹀﹀﹀ɢHF﹀﹀﹀k﹀G﹀﹀□ڤ﹀﹀□﹀ab[>p﹀﹀?﹀﹀□﹀f﹀﹀﹀﹀﹀□□﹀﹀﹀□□﹀﹀[W﹀﹀
﹀□(﹀' ﹀﹀=﹀u﹀]﹀8﹀1Y﹀﹀﹀□﹀﹀W□﹀p□□□l﹀﹀X﹀﹀﹀1﹀ฺ﹀﹀0□?﹀﹀a﹀!
﹀\﹀﹀□M﹀﹀﹀﹀﹀'﹀篷﹀﹀{﹀﹀□﹀U﹀a﹀s﹀﹀1□﹀^﹀□h﹀﹀﹀﹀﹀p﹀7﹀﹀3\﹀M
□□﹀﹀˚ᄃp□□:﹀□﹀□"□□!□WMU[﹀﹀x﹀□YWd﹀Irs﹀□;□﹀﹀﹀﹀﹀﹀﹀﹀□﹀|
﹀﹀!.□H﹀#﹀^﹀0﹀□.q﹀K﹀□□﹀C{﹀{U □H₠﹀□□Jo.q﹀(﹀o.q□X﹀﹀A13i﹀□﹀?
﹀﹀ʟ﹀□﹀﹀﹀<?□q□﹀T□﹀6﹀﹀﹀﹀﹀﹀□ᵩO﹀?ˈ];0m﹀﹀□﹀﹀﹀﹀
﹀﹀AP]Ǝ﹀_﹀﹀_﹀p﹀C&﹀8﹀J□k﹀[﹀﹀﹀﹀﹀﹀X9□:﹀﹀﹀﹀ U#OEv﹀﹀﹀﹀\﹀□﹀□﹀﹀Ao{﹀n﹀
```

W@Òj9□□@:□@@□U@@@F□ŭb@F̆k@□□@@@W1Ac@@ĖM@□@4□f□4@(@l@@@z@@□@c□@
@@□4□@@NGP@@@Ax@@□@?@{□@@t@@O@□□@-X@@@@v@@□g@Gr□□@@q□@'@□□X0V
@@V@@@~@@@@@@"{/@@@@@@@@@@□@@>@K@H@!
@@@@@;@@@@u'@N@@B@@f@□\@@q@T>@80□@ Z@□@NA=@@@□:
<@□@□8@\L@@□@{@!@□□@@M@@@□o@@gR&□@U@□@@T@7@-
@u@6@@D@@@t@@@□yK@□T□h!
@@@:@B@□b@J0□@#4@@@f'@□@□@y□V□;;@□j@}}□j□@@I@@l0Q@v@@@t@@
@@O□E□@D;^W@@@pIq□@!@h@@@@#@,@@l@@@@@
@@D<□4'0□@i□kJ<99@@□wy@@□q;;@>@@□@@@G@c@@□□rv□@@@@@$>@□□@1@N]□
@@□<@@@Tc@@Q@u□@@@@□V□@@@@@□@@@'@/@@@@@B@@@c@@□□□}
@Id@8@A@l@@@@□@U@)_8@I□@@5□@Ryyr□@;@Y@M@@□ P;vj<@9x□3□□@
@8@@@@V□@@@Yl@@@P@□@@□□>~@IR□@@4□@□@@$□@ő□iX@@@[@@□@@□e□@@@
□W@#]@□ @@□@@wp%S@@@@@ @@~kmq@@□@T}
@@@§@@@a)@□=.@*@~2@@Æ*@@@□WU@@□qg@.1KuK\d)OKuK@k)mKuK\s)@□@Ħ@/@-
j@@@O\@@@4a□@U@@□@@□[@E@1E□@@÷@a□cZ(@@@U@c□□@U@*|@£□V◌s&□X@@
@@@a□c@@□ @@Jɡ@hž@@@9@@@]@Y□w@@C@□7m□@|@$@MdU□(@@@!
@@Ao@@*□@@T;@Ɛ7W끠?/O@K@@@@^□@@@@@@W@?@□□@S@{@|
@□:a<@N@□@Þ□@@□j@j@□N@_@x□ţT@wp□Ien@@□@@W@w@4□□
@@Z@Łv@□@@G@x@@□@)@@@@@□□@@@@V@@?
R@@@+@@@@P@R□]@@@@@@@P@ĸB□@PʃU@□@X@[)/@@@C)□@@/
@@□@k@@3@@@□@}
@R□@@□Jy@□R@@l7Jy□@~@R^A□U@Î]@@□y@@R^C]H@@@□@g@@□@"@R□@@@>@□@@
@;@Jyg@@Q‘@L@□@□@@@b@@@Uυ@m0Jy□iȍR□@@@JyJb@(@eD@□@<□}
@P@@□@p@@$@□@ơ@WQ4@(@5Ye@@u@@□@@@@@R^u@T□@<@=@@Λ□@□@B9YV@@U
@I@U@@U!@@@@dM@N@@<@□ł@l@@□Gq@@@2□@@@w@Zx@@^@C□
@@@l~h@IGv~h@@@@@□-<@@□+w9q@q@\@□-
@@@@u./Zx@□@n@&@@@@@q@ou@@@]Y@S□@@@@@!w@'@hZ@□@@^@□J□
@,@x@@@W@@@wC□j@@@!@@V轟
@q@9□@3{@@{h@%@@5Zx@w@@@+@@@@«H@@OXB@c□@@□@@@@@k□@@j@a□@@@@
@F@□^□ d@@@□@@□Zx^B@@□^p@F□/ □@@□@<Z-<@53Zx@O@h@e@q3ZxP@{h@□@@□-
<@D{h@U$@5Zx□@□@@ıı@c@@d@@@@□@6q@_@@ @~@Zx□
e@□@ȼ@@@@@□@□i@I□@C□□F@@@□@@@@=@@@D□@@Ǹ@□@n@}@@?@£@@c@?
@_[□@□@0@H@%@@=@@2z@F /c@@@@R@!@W@w@□^□@@C O@ ^Rx@□?@@l□Rx□@@F
OJ□@J@□'@1+@7" @w□)<□@{H@I@<@@□@□□^@l@@@□@□f@@hQ□Rx□@@□^@@5Rx
9□@@#;@@^□@□@@@□@@@@□@'@@□& o@@□@C
□@v#@ıı@@J@f@@@@@w@U@@f@)l@RxJ(@@+
@zK@U@@@@□^C□@@@□}U@□@□^@@r@@"@@□@+@'@@C □@s@@□@~□Rx
□j@@D□@<@@ @{H@A@@!@@d@@@@$□zH@A\f@@@C@@@@@Hqi@@□Rk□)<9@@C O@@!
@@@%@J@)α[@ @@@«@"e@@Z@@E @#9@-@□□A@D □@&□Rx□@o@□□4□<@@b@sC@@D H
效@@b@□@A@@C @"@@@@k□@4Rx]β@□@S5□□@@{@□□@d@□@□□rq@d□h@@9"@□@(g@□)
<□□@@N@@D H@I@@□}s@cE OI@□)@@@@@{@@k̄□@H@yl-
0Rx□YG□@□@3RxJ@@H@)@@@□@@@@2@@@G@;@p@!@T@@@|□@(@%@mv
@@@)G@,jq@s□@觟□□@□~E□^@@)L@8@-v@O@3?@@□悌
□H@@@]:@0@ū@5I@U>@q"v'@1@%vw@ @@@bwJή'@@@@@1@@`@
□Y+9@@@JqEO#@@\P@@@@CḴ26@@h@@5@kRNfύ@@□8@H@g]X@cY@(@fQK@w@b@1bwZ@Ɛ
@ S@C@."ñ@A@@!v'@□e?@□
@@uZ□:@@@e@@@!Y@@@@@@È@y@60bw□A@F@.@@@K@N@□□@;@X{@@eD□□@;@u□@@

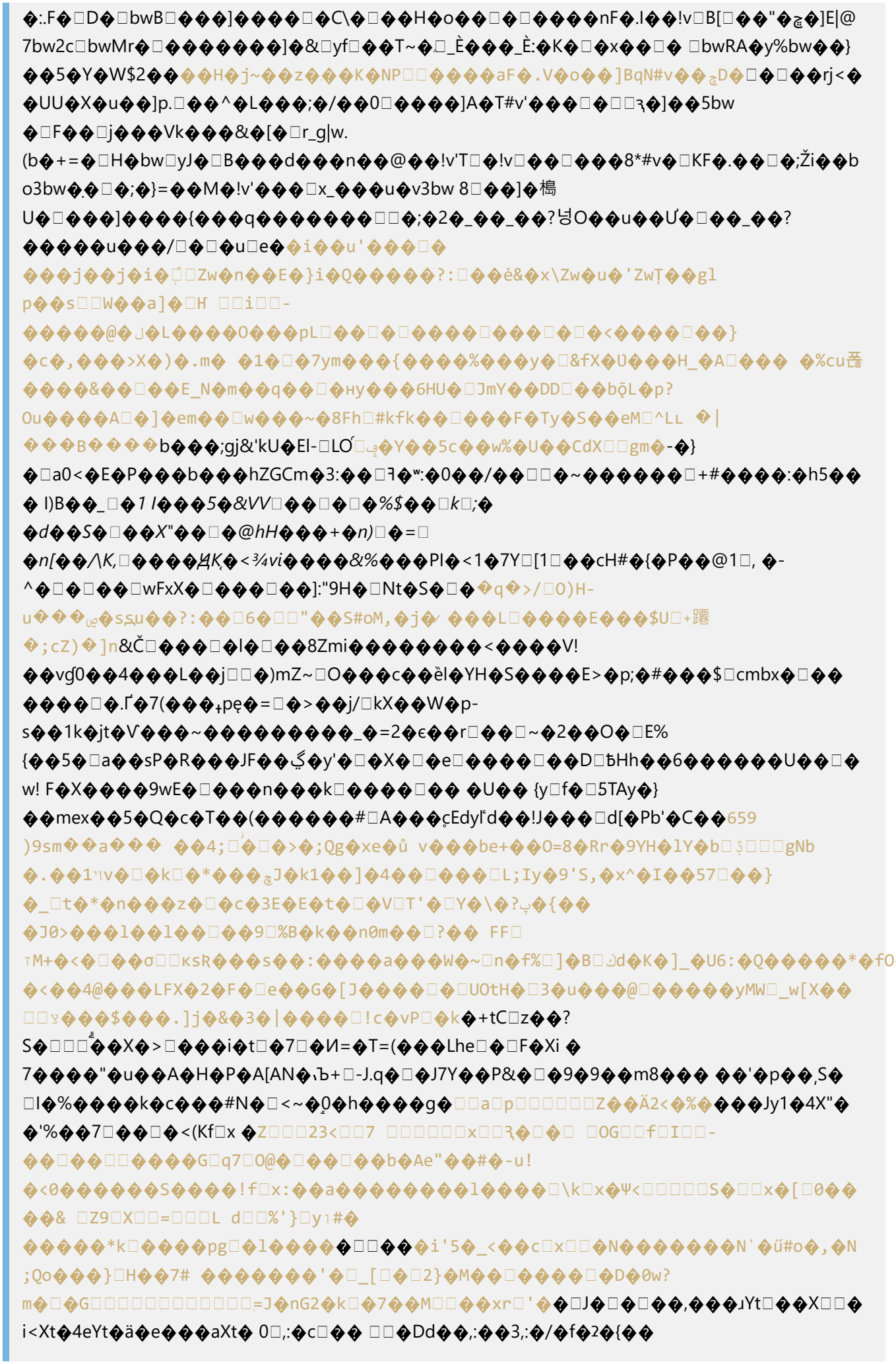

```

```

```
¥O□E Jj xr,□□□□□□□□□□□□7N□□□□□□□□□Yt_,:Y□,□□
E'{?Xt_,:2□□□m0ɜyE□□□d□□□□
N□oOx□□□Xt@N□Ţ#□□□E□□□oYtD□□□□S□w-□N□□□□□4I□□Xtď}
tT2□,:□□Y□□□y□□□□~□□□h/□□□□□7□□
υEG~□Ţ#□□□□N□□ǰ□□x□□□□□□□□□□]â□□dYt□L□)□□□,:□□z□□TI□xˢS1□hXt□□
4□5□□□ □□NW\□□ □□□7Va□□□□□□
□,:5□□□□□□<Xt:2,Y□□□□Y□□□Z□□□□7,:□□?Xt□ġ□□□□|□□d□□□□□"1□EG□□□□B>-
□BM □NG□E□8□□□Yt<r□□□□□□(□□□□□/□EGN□□b□□□ɟ□□ð□□□5,:□□w
□□□□□□□□□□□E□:□□4,:□□□E□□ıı,:X¸,:□NjXt□□□Ţ□□□□□)rj<Xt□□9iXt□j□Z□□□+Ų□
Y□b□)□B □□□□□â□□□7□E'>□□□E'y□_
NF□.oXt:□□□E□□n,□□2*□□□□□□□□3□□d□^,:□□□□ □
ʰ□□Vâ□□□□□e□ȣ□~W□□□4□]□□~□J□□f□Y]□,□□□□□<□5-
□T□u¨L□1_□□□h□□K□{a□□□8g0\X□~8□F7ڭ□t□□□□<?
XtR□□)□I□□|v□□ج\□]□bI□O□□ON<□K9□~□yY□□S□-
□(<9□3'□0□□□L□3L□□□ej□□□□<yrv□µJ□□□e]□□o□+□□k;□□□□i□□□'□□□□q□11□□□
|□g□(□□□A0□□□#□□□□□□□□8
□6□□x}d□□p□|g^S5□□□#□□□ń#□-/&□□5L8(□i□p□□□b□□□□□□)□o}0□T□oy0□□□□
2□□□ń#@□□□□ □□L8□□[□N@□□Ä# □□□□□P□□0□d□o□ □
□□-□□*□X&□□oy0□(□OÄăi□\□L8cq□□□□Q□
v□&□□y_□□□5,□N□□a□pP□□0□□\□□□□□□□□d□_L8ROy1□tDd□h□□H□V□e□Ω □
□□ □N□6□□□ND□-Ä□□□7□ '□4□a□Q□KÄS□}□2□
□e□□~□□□^S□Ɛ□p□□□□Ä□o□ń□□Ɲ7□□0w□□p□3L8□□□□□□□□a□□X#□L8
□□f□□Uz1□4□□□ G□□X&□<q□N@@□e©0□□ND□$□□#k□□n□p□7K□&□□Jf□
□5□□N□□OZ&□T□2L8□□□2□□□ƃ
G□□□□NŬ□a□□Uz0□4□□1L8□□I□&□□_□□□fć□F<□□p□□!□
^□e□ǵY□ł□u□□&□ʝ□A□□□□2□L□/□N□e□□L80□□L8□g□e□Qw□91□/□□9□□/□□/□□□□/□
□□□ʊ□p□□F□^□□□^□DŽCǘCt6□□□~F□□□z□□□□&□□□h□□□□S□□□□tX□%□□%□□□
6□□T□QA+□eB^O6□□□□□□□□□□{□□□_□)□□□{□□□i□D
□K□y□□□'□□t□:□]□□□□$□Vf□iY□U□Etj□□□□□□;□□□□□[nV
□□□9g□□□□□g⁄%□^u□□,□□)Y□□Z□m%□,□□□□□□□□7□□□
□□□□□{.B□P□□□□S□□q□P□□□□l□e□Gg□□z□4)□5:p□ba□□□□|x<E□\□□RNg□□(=ik□|
□t□2OO□J□p□□N□□□□□];#□□!□□□rwZ□S□□!+brR□□□K{]□g□□□L|□q+!6□□5mkd□}
□b□□X□X□Dž:□E□□□<□□□K□:□n□□□Qy□f□□p□gF□g歙
□□□<U□□□□□□ď□ho□y□=□1□□□
Z□i□□□□□WW□9^□□□□W[m□lL□□□□□□yżD□□□□□p□!F□□/
□□\□^□,g□□□e□6X□7□□k□□□□□hl□□~□□□□□U□□□OX□□1□□'S□
□0□k□□□X□□□#Ɛ□Ṽj□□□CZ□XY□be□-
B□z□vU□□□k□□□□:□0L~□i□]□□;□□□□□□=□X□□□;e&'□□□□□t$□Q□□□□h.8f□n□□y
□□□k□□□S□b□yD□□□v□gn□feQ□□□□□4□□□□□'□□□5□□□□
□□□□□w□□ɓ□□□□o□□□□^d∋p□□□□7□□□\R□□□□)T□□+Bs□k□U□□□□□Z□□
□□□w□□Yp□□%Ge□□□Qq□□□6□□l]□□□Z 7□{□T□□C□E□□;□□□□□gM□□
□□□□r□□□□□{□(g□a□□^□□|□g□J□lXc□□γ□□□□8□&□:7□r_□□□□5Ğ□į□K/
□U6□□T□2U□□w□□zVY□□□c□#□□n!OM0}gI□dB^□□□□u□&y□□Ÿk,□□□a□□я□□J□□□□
□$□□□-□Y□□□□□□□□□□.□HT1+%n□□□□\Q@□Gzx_□;□□`□□!x(□□□□7□□□-
R□gC□□□ʌ8ke□□□@□□\□R□□sQ□YIm□□□□□□?
□□□□□□□C1□□□□w□=□ıydmM'□□3{!□□v□□q□□□□□□□□□□{□,□G□□□□R
Xs□;□□□□5□5l□□_□□XL□:L□□□87□□□□□"□C□□□C2c□□+e>g□-□□□i@]□□Q□□
```

```
◆◆◆◆◆◆6□◆&◆◆◆◆□□◆9◆
◆s◆SB◆◆◆9&◆◆>◆□G◆□□H&◆"f◆◆◆R□I◆□◆◆'2◆UA◆.w-□
◆◆□6&◆◆◆◆◆Y\□◆ST◆□◆u◆,◆+◆)Y-,◆,◆□¸tqD◆I◆7◆b□◆◆8O◆i◆dAs□◆u◆DC◆iU◆◆;□
◆◆3□'E5 ◆□v◆◆◆□(Ä7br$j◆□p◆◆□L◆D-□□◆3◆y3)◆l◆◆□sh◆□d|
◆□◆Tn3◆unkw□~◆◆0◆m◆j□U◆◆&"◆D◆□◆◆!◆◆◆◆□Y□◆◆N□◆□
◆◆◆◆~◆◆o□B◆4◆□◆□◆◆+ □□41□-◆d◆□□◆Q◆B◆U◆◆C◆I◆f□□B□□◆/S_◆
◆□r2◆◆f◆s◆&5◆◆□◆◆◆x◆◆□d◆◆$◆y◆◆
n◆◆o◆◆□□@)W□◆y¤C◆V□◆Q8"@◆C{◆i)Oh□8◆8◆◆t◆◆◆◆7|s□_'◆,;◆aEd◆<◆
□□m□^□"%□©□□□□y□b□□□□N□J□x□□□S□x□Uf{□G□□□□□E□v□<7□+?□(□□□□flW:
<U◆M◆n□RG◆◆p◆◆E◆◆◆◆G◆O◆~◆◆□◆◆◆+◆_□I◆◆◆◆.◆n◆□◆□□yQ◆◆◆hL◆O◆K$/r+
◆◆#◆"◆□◆î◆DR̀□)JxK^◆◆S◆◆( ◆◆!/□
◆◆'y◆◆◆<î◆◆◆E^◆◆I◆◆H◆◆□y◆□D>q◆◆□□U◆◆y◆□5$M◆◆ER◆|
◆□uIR=î:6◆Z◆"◆□◆A^$◆□,y◆◆&hK^◆□□C^□◆◆:□El□◆◆EH◆cî◆_◆EH"dqTJ◆&/
◆◆:□!i◆!/◆H◆dî□◆&◆k◆□◆4□+◆□I◆◆A^◆□\◆"/□□□|IK^◆ =K^$O◆"/
◆◆◆IC◆◆r◆5{□X◆I□B◆L+T◆◆fg◆?/O-'◆◆"Q&◆uy=B◆JNǦ◆◆m◆Bp>?>'◆□yщ□◆ 褑□□◆#
[◆◆□◆B◆□◆◆◆$□V◆◆,yQ;◆B´◆H◆◆□◆◆!/B□◆◆9s◆◆□□◆◆DcS◆nY◆xLÍ◆□Rm◆□c◆◆b
◆◆3◆T0%◆Pu◆◆□ ◆"5◆◆=◆◆◆0c◆◆◆'B□◆◆□In◆AO□◆郎◆a4l鉰A◆◆□u◆◆◆鉀◆ ◆◆◆
膞◆c>◆'◆◆,=□◆"□z"◆◆H/z"d◆7◆D =qCO◆□□i◆xл,◆◆ -◆◆'□◆◆□=□b□-=◆j◆◆
鉄□0◆◆□◆p7=◆j□◆◆ ◆◆◆◆HIL◆◆D0◆/z"□◆◆'◆◆□◆□E◆◆-=◆◆◆◆◆□3p◆◆(#-
◆◆'BZ$COT◆□)+◆◆<◆◆%□Q6◆◆4□◆◆◆h◆◆□◆□◆◆=◆~◆◆◆Hp|□z◆"'◆◆◆□◆zCOT◆6
◆◆□◆◆□z◆◆◆◆-=◆ ◆□◆D□艤◆l鉠CjPKO$◆ 恱H
LOz"◆◆>◆□□L◆◆'◆2◆◆◆H◆d_◆D□a◆◆H◆□□z◆◆1KO◆42◆◆(+◆◆◆%cFP◆◆'□□◆◆'BZ□
COT◆□◆◆□!]◆◆'jX>◆◆DH◆i◆:z□□◆т
7◆=◆X◆□◆z◆&◆~wY◆◆Hr◆◆AO◆◆,=□R◆Zz",□{CO$2□◆◆(;◆7◆◆'◆◆□,=Q□0◆=□Dm/z"D
◆[z"Y◆/z"◆◆^◆D◆◆>◆
◆z◆□5Dp□z"◆□◆◆◆d□◆□◆'◆3Xz"◆◆^◆D◆◆_◆D◆◆◆D◆_◆◆'◆H□g◆J◆=◆◆□□◆B◆◆9
◆◆◆◆□)◆qCO◆◆qKO◆p&KO◆◆k□z"◆Q◆◆,◆D"□'c$◆D□◆>色◆s□◆□ e鉎
◆◆@OTNZz◆+◆◆□◆□+◆'jNβ□=□0□?艂◆f/z◆n◆
◆'B$◆◆'*v◆□z"◆◆◆7=□◆0◆}R◆j◆◆◆◆□5□;◆◆'□◆ ◆◆~◆□u{.□=Q◆p□□z"◆X◆◆:X-
=□B□,=□□□6□DH□□6usO□b□□□□sh□q□^□□J□s&!□7□R□□□}SF□□□=B□□-
◆◆^◆c□&l◆◆COt*□◆EO◆□□KOtVY~◆□I>◆T□_□bI9◆◆H@V◆Yz◆,◆◆>□□□□□□□□□+□o◆◆
Uv◆IO◆◆◆□□□□.□□◆d◆QjH◆◆}◆◆;◆FVX◆◆8_□□◆LVy◆◆□□
◆W◆)□◆A□□◆◆◆◆◆◆◆◆% ◆pgK@◆:h◆◆HΔ◆ □◆.◆□◆◆◆◆" ◆:扆H◆3□□DP◆□□□
◆2=□◆◆◆-=□◆◆◆◆" ◆◆ 틀H:□_□Dǫ□□□I◆ E卜□0&◆◆h◆)A◆◆◆H◆◆/□
◆◆X◆K@$U◆□□◆◆6_□D◆□^□DH|◆o□◆◆◆G◆◆◆""◆□□5◆}□□ □jz□□
◆◆◆◆□sP◆◆◆F◆◆@@T◆y! ◆ ◆◆! J◆Ek□◆2н□□"◆o◆□◆$□◆" j0'-□
◆◆^□DR◆~□□eX)◆◆◆c◆◆□□□◆,?□◆◆◆◆A@□◆扆□◆y-□□□◆X□"9□^□DB□◆
jH|d□◆:J:◆□D◆◆% BB□K@$◆◆□□□◆O◆□◆:◆□◆◆◆◆x◆% j◆F◆◆◆◆◆Z□"◆□◆□DH1◆"
BB◆C@◆□◆b ◆do□□□□◆kX□◆ '◆! ◆Hle ◆□◆◆
□̿◆◆□◆t◆◆□◆~□□[^□D□□z□□□D□Y□□□□□! ◆◆Lz□□◆! j◆◆◆□DR□{□□◆◆◆"
◆◆◆□□A◆jV□0◆5)◆ ◆n□◆@◆><□◆P□◆□□□◆◆□◆◆c◆◆?◆◆h◆◆□
◆◆◆◆◆(◆□□◆□□◆◆◆□□◆◆◆ɳH◆◆◆|◆□D◆◆+◆□D◆□D8 ◆□D□◆◆% ◆□□◆/□□◆◆/□
w̄□□□e◆6□□=◆□◆ ]◆ ◆Ḥ◆q◆$□◆□◆◆P g7>□w◆g◆◆]B◆◆gZ/◆□◆7iQ~8/1$e◆◆x*|
◆{◆◆◆◆G
◆□◆"◆y◆%□◆◆◆◆◆◆"◆◆◆G>◆;x◆=rNı5◆◆◆□◆q6◆O◆>◆◆◆◆n◆M□◆◆o◆◆\t◆◆D◆
◆□#+z◆◆◆l□◆◆□◆l◆u◆o}~◆◆<◆◆◆◆◆:◆◆□q◆◆'◆◆◆◆◆\t□c6-
◆□□◆$xkjY◆□ᵩ<◆◆t+◆◆◆Ua◆uQ◆Ogu◆◆□◆d2'◆◆◆\◆◆Q◆̋◆◆4l◆◆◆◆□◆◆□=hke◆◆
```

```
ꀀꀀꀀ
```

```
??%□B?□C□?#?□???□Ã?Z□3'7□□85□□□□0 ?? ?□ □□□□□,□□4?Ã□?ozPfÕ□□??
Ã???□d@???d@??¸?□Ã$o?w,?w?2?E???:??□??□t?
I?□?□@n??~?I?□?□????~□□???A?n?~?□???□?Fy\??~<?□?(??□?O??}
??□e?,□B}□?□?}??~$??????·?□??□t?]rA7?□åPn???4X□??□??-
?O?5h?~2?AK???:??'□?3□?O?fuC?#g??H@??aG?t?□Z4??□z?□□?□t?
?#??{????Ч?□O?x??4lP?t?B????n?□?□??M?□□f?-
?□□?□?□?2?□?□??□?□□Wx????b?~??3??? Q???QBW:□E?□?????□?□t?
??nf?~2?8?'-4□?=?~????□,???□?□_t??????? 5???9???□????G:z□?□uJ-
□?P4□+-□;□?□?□□??□Sε?b?F?t□??'???'?N??□????C
????□??□?H7?>???□}B??□}b□□□□□φ□
?Ix?□B□?<?□?OI?3XB□??3t□□;?S?P□?□?σ?H?"?□}□□□□B□??{□?x;????}d??'
?□k }□z#7?OB?]C?e□~□?□??I?~?a??r□>□}?W?E?b??)??Ga□}□J □B□!?O/B□□'?!?
□N+C?#Qyz□??g□}TU?□?d?泄
>???□?<□??)□??□?OK?,?□?A)?7?W???e?W??'?y%?>?ü2?>A□?□?<∞??.kB?^
??_□?□?[??[????<?t□?□\?K□???=?!?R????????go?}
?□??E??l?q=s?p?/9Ɔ□9OE?5?8??-?□Yr□?_mr□b????3?^_?s??
?????E???c??□□?□????y?~□K????b?□?a??ы?c? ??nY???E??CG-
?R□□□?????????□E> ?8DW??Y□□%@?S□³?K?□??()m??s??5??Ww\!?,
n?L%□???'?□??j??S^?uk□??l,q\□c???N?□??T?Y□???Y/□k?6?x?R□#□O?x?
???ë ?□?R□□.t?xuX□qw???B|TV?OY??Q??f[??Q?□?
Z□□[□O□FG□□□'□q□r□'□A"□□□υ□b98□□vwjo+□□□L□□Y]□□□□□0-
T?d????S9?□mr??;g!X?k?□?□?ia?,??y?o□4?X□1?m]H□w?<?3vG<?
$???8$h?l?9??h?8□??~??L??c-
?*;?2□□□□hrm??;7q?3!o?3#%dn?Y&ckg???k???=??(□NS??.?G?n,?:??□K□?'?
"????????(g?k??????[x□???O??? hi?□}8?□|
??>□??;?iM???v?uD@#??*ㅏ????)?□??,ɯ?|
?>□w□?□o6????□Q↘q□□□n*□□□a*}$□□□□??□a?Y?#k?□???#□+?W?gM??L□?□?[?
□5□1B?ᔕ?QLM???{?<?/??Dæ?M|0^?????8ε??gA/?□ H□:□w□ □Hl
?[q*????ɯX???3□?□???X/
??[???????;'?V?I?;?□3?7?j25H???UX□????????q?{Sj?压
[????□?I&??K?}Av? =?1FD?????\?□zN?)4□hIn??
(?□#I?□5?□h?O??□??h???'□??????|
???f??□??%j.□?Zɯ□□□□O??□??E?j!□?!? v?y??&?8 d?o?
??x??□????□??_???"fc?JM?□
?□?y??N?□XO?<e??QE???2G?IWU???k?:K&□□□□M#XO5?L^?::??dEeΩ??□=h□□□□
?□?8??d?□GN?□<?c?U?□?ta?8)□dmp?IH?????????□?□
L□□□K]□□□□W$X□□□□i□s□□$??M□□8□s□□}[wk□□s□N□)□-□□□□cJ□#w□□□□!
W□'□□□□□□□□Pa□□□□□5J □V/□f□}iB{□□□□□□□□□z□□□Rv□□1□7□v□!
?V7?□???Xn????□?[K?cx?□???sx□
??C[?E????6OXJ1?Z*?(□???Ж|U???6□□□n-
9V□□??:P□??R??????????\?[?,?□????□B?[??E?[K□?^O+${□□?[+Vv□?□???+?
?□/??X?
□4???9Nn???xl□??□?·???S???□?&□DO,??^?U?>aH?????l??□ME${[)R
?m□hN??C□?□C□□0?g???□[.?j-?wn? ??5?{?s??UE?M)?z.;?2x?□□'?□??@?-
?l?P?u;?□-??W???R?*W□?wk(\???□M$?,U?#□?□???□???□{{W??? ?m-
@k□□3/□□In_□dH□□□□e&□=□o□□□□□□□□□髯I?e?O□cT4?&?^g?????,?/}?
?k0?s□v□"□□_ ??5&???_?u?5?H?AB?!?#?h??#?T??!
```

```
d l P P N S < v4D v  v K! 쨂 ! \ bK \K )0y<
;Yy a @ ; d1 } s n ; 2 >wK a K SQ k
;ȼ4 v0za ; 6 g M Z *u  > ;=
v % 4 K ỳ: ; ^}M+0 6s 5 @M 3"; 
~ Ƶ u9[9E ' E 0 Y #N I GɯVK K 8 S , aG #
~ p 1{ l :" Aӟ lT ]\q ;U ZD : T
d ̈$wK X t K p 晉S C -
a 9 a = , a' Y q9 < v h ; ; x ! t Y g
; v ; I tX v h
;Z v = Fr ;Z aGk # v v ! h C ; =< k K | 
뒨3 v + "a * I ~ \ Fa \ > v  # v [ v4% !
g # j ! ~ # v y* "f 7 , [w
8qK G Z A< 1= 6 u y
kK v 1 & N * 2 h + v V v. I A
 a'b* !
hv Zĩ ; >K r ; ; = N ~d ; ]wm a aG .aGw| aG 1= Co 
[,aG G A ! Tu : x c % %ʹv vEl ;w NN{ -
k ; vv vt ; ! " ! \ Wq ; #A_x v vP  ;:z{ X ũ,a d ;*
<p ; 1? ; ; D [ N=F~ 7a ; H. oe
; G X R & d a%2K ss E
, \ sh I Z x 4p ^ E Φ< s"; ! ; J M aG a v
oU [ aG B d V
F ; R zHV _e {0J M4b L ( k N : # U j S ju $
T K Y ; ̄ v \l ;5 + v | % vP i ; _a ; Y
5 # P aG3 < f}x ; 0 -a S \ -a -
$_ K A ! 4 x 'aGw !
K QO G \ a H S yg% dT 'a 
v v v v 0 v v vt$t ; I vR
; ; AK # T;2 a d
;HJ 1 dt$ ũ Y A;g ; J% ; :^9 g l ; H 7 3 %준
ϵ & Pi z <> v ε% b ;8 Y ve ; ? W 8 #
= v2 f sd N q vT  v ^[ *aGÅd ; -
aG K ) ' &K8] % } P : : n, B tQ a в
; v K y ; r^ O U^ %켄 @~ ;?aP}
;X /a vȯ ; Lst " Q ; pY J̌e t $# X ay F S7 PFX p2 ɢ
N x0 Ju l '#, ) ) p?
y2B n) w+ i % FFHk ᵂ 2B f SF y ]5 Űm 4 1 MÙ
 ! H? G #.
= kU = r@ J b 8 2x Ǻ { G @ uX ʏf /Ru" = [
%
Z r K S \ B ̄ r , ; u 5 # V5 L\G
uK 9 \kU#* 1 3 % H3 A \dU# qn z q v
B RG R7 u T 1" K ̄x-}o U g =p % $ t Jʊ i p \
yQ| I dBu \ * % ! . 6 $ i V  q W &H Kf
U P) 4Nd e p " Q W 4' y Vw F ʹP
1 .ʹHC v$ ℮ s rU Vnua' eL $ \ { 7' VS sBQ 늚iQZ AV 9T
ᵂ c I 5 m e ( g 禲C u H Q 臟
```

```
ÿ□□□□□□□J\□□□□u□□vS˜w□c□2□v□Z□Z□□□□□8x□<□□E□
i0□R□□□□4□k□Y□□□?][□Z□*\□□□□□□□Y-"□□/4^□4□V□\F□□□□□□□
l□□h□3ϒ□□□□□□.□□L8□o5□□□VM8□□y□>□□□k{□h□x□□f□IS□uI□□□0□1Do□□
□□4]□□□□□□□□^{□□d□□□□QK□□□□□@aV%G□,□GQ☼!□□□□9S□□}
□□□2□e□X□□5□>□□□□{
Qu5□□□□□˙□□□E*□□□□□".□□□□□□~U□□□□□□r□□□□□□□□
□Ć□□0□□□□□□□0□□ι□□0□□}□□|+}□X□|M□□□t+ q-}□□□□.□□□
□□□□□□□□□□Ↄ□B□□□-+□d{7□"□□Y□E□]□Ep□□□□□□□z□
□w□□□□□□L□8'3□#I□□I#□-□.l□□□□LY□□S□□r$q□□sP0o□q□□□*_j□□{?
8□□V□□□_□w□R□□(□□ □□□\□O□□□Q□□3/
□□□□c□□ꝅÏ□□t□□z□□□m□.Aq□□□□□y□J□ dmn□q4 k□/[b
ES/{8&□□□s□1□□□□I□3□□□□□□□□□&□iJ□H□□va%O□□□EW0□□□□□ō□02□-
t□b□0□□ □□,;B□C□9□□O□H□x□.'□T□□ʒX#.□ť□□x□□D□□□□□□□□]V□ՖՖ
ʃ□□9#□□D□□□5□Ls□□ş□NJ<□
□□□□□□□p□□u□□□1□□□X□□□□¿b□'□o□□pGis□K<□i□□□xG□□x□,.□-
□r□W□ɠ□□□□}
□jD□□}Uu□B□Ë□$□r>□□□#□□sx□□B!:□□□vl□□r□V□d□□□0{□□1□□[□_□□□_b~
)□□□□y□w□w□□□□_□□□?□□□ৃ□□K□|□□□1□□□S□i□;□□<□N□;[□□□
□□w□<□□wp□g□; □k□;□
□□wP□k□;□□=□□□0□X□N□□□□w□I□□□□R□□l0□[□□□~,~□□□□s□□□□□□□□□□□L
□□□□8j□□□□u□□□l?d□□;Z□□~□□Z□□¯□□□□□□□□#□□鋅9:□□□□□G□-
□□c□□□□□,~□□i7□□□g[□□□□□□;□V□~G□qa□cH□□ת□□□yßSF4fI□+□K□y□hz□□□□f
f□Ov □;□y>□□□□| □*□□□藺□□□□□□□w□J□:□□=l□□□_W□□(□'□□□w6ǰ□□□□□□!*
□}□□%□d{,*95□□*m□□□QJ□□N□□□□□□%□□;9□□□□:.}□v□□:□□□ □
□□□□□;□□□□j□;ǵG_ □□□9□□5M□□Z□N□kG3□<□□r□-GS□=□□&f{□□
\z□□□□□N□□\□□□4H□□□$X□□□q1□□□□+□□□□T□
□□ৡ□□Q□□□Q□□□□□□L□□□□□□□□v2□□□v0□h□;Z□□H□7□□□□□v0□c□;□□□□N
□□Z□□□¯□i□□□□v□<□□v□ę̇□=□□□̤□□□□□□^;□□□U□|□□□ɛ□□?□ᵬ□□
G□□□□□□□□□.:□□□є□□ڈ{□□□+s□□A6□□□ □□□vЏb□;□□□□;
V□□□□~#□ᔓ□&□□□□^□G□□□v□\/□□Q'□□□ঃ□□□□□□!□
□N;r□□%□□□□e□;□□□□□s□ˣ□□□□□□□□□□□3□□□□ڜ□□□□□
□)□□□□□□□□G□-□x.[□□□^%□□s!□□□v:л□□T□□h□;□□□□v□□l□;
□H□□□qOg□;Z□□□□□□□□~□□□iЏ, G□e□□s□-GG□□□□i□□□□v□□□□炓
□□vt□□□;□□=□Zy*p□□;□□□□□v□ln□;□ms□;□□□□;□_□□□□□[□N□□□□S□□^□□□□□□□
□□□d□□□□□□□v*f□[□□□□a□;□□:□□Qω□□)□G□□□G□□□'□o□□v□□□□s□□d□;
F$□□A□□□□□xn4□□<□□□vTx□□□□v□□□□v□□□□□□□□\v□W□N□c□-□□□□□□□8□
□□0□Y□□z□□□3W□□□ f□□Ꮮ1c□□IP?aX□□□I□!
□□□K\úA{wX□□□□□5□□□h□□□□3□gg□x□□=□p□□□vvt□z□□□V^U□□□/
□A□□□□;□K□□v□□□<'□□□□□□0□□&□□Qm9□□□□□D□T□:#O□\□sxn1□3□J□□□□g□:
□+□+□□□□u□□□□,B□□□□□□□□l□:=□+ tt□□!t□3□BG3□<□□f□y□□□6Z□□&□□□NQ|
□□□p|□□:□□□□□□□□:(l□□□□□□:□s□□:□□s□:□r□:
(□□□□□□□□□m□□BGsh=□□zl<□□□z□□□(9□□□2m□□□□S□□□B{□□□□"□□iC͡3
t□0□□□□□□a□: J□ t□ □
B□□□□□:□s□□:z□□□□Qo□□□Q\□□□□□□,B□□□□□□□□wx□□□□Z□□□W□B□□□□:
F$□ЩvD□□N□□□"t□□m□:□□□□□N<□
BG□_□BG□+□□□3N6□□□F~□□□□a□□□0□Y□□>□"t□Wo□:
□□"tP,o□:□+□□:□_2□□□s□E□4□SB□DhW□□□□□□CEy2□Z□E□4□□-B□□hf□:zϽ□Щ0N□□□(
```

```


```

□□l□□□v5□!b-□?v9S□O/e□3□□□M□□□□□f>Z□□?□□>□ri□□
<Q□□□□□□□□□V□□□□;g□□ur□@r □9□□□ □
□b□□□□□+□Ĩ□□□~□□□k□□□W□□□□ □□□□ckf|
□□'□l□□□4cgd□□□55k؟H□□)□□□a□M□□□□?;[H□□□{□□C□f 9□□u 9□
□□□□w□□□<□□Br□'□@r□□m 9□□k!9'□□g:□jHϡ□@□□□□l□f□ 9(%□□□L□t
9□□g!9□(□BrvYy□□□□[H□¯□?;[H□□¯
□□□H□$Gk8□□□□ŀăUkɻ□dx□□□h□□□□x□□□h□{□□]ZH□□Ù□=□](R8□□?
&E□N□□□□□$□□w□K□| □□□□’□□ □@r.\□[H□□□□H□□□:□□□V□□□□N□?U□□靄
ـــم□□X?[H□□'=H□□□<H□□o□H□□□-$□□□-$G□□Br□□=H□□YH□□□-$GW}
Ƀ□□s□H□□□□H□z;$□%□□□□□E□□A□□□□(Uك□□υ□□□ف□□:□Br□ec!9□s□ □□□□k!9x’□
蹟Ł□@ F□□□□□□□
□Br□1m!9□□ڑ?<O□ι□□□□□□□$□□VXH□D□□H□f□□H□f□ZH□□2□□□y□□$□F□□
□ψ□□h□□
9x□□?□□□□□O□□□d□c-$'□(j!918□*$□2□□H□U□;□$□g□□□iP□□$□JÁ□@□□□□□x□Ar"□
□'$Gw1>$HuX□□x□Br4T□Br□□ZHN□>h!9:^9□□□□□Ä□□□□□H□□□□□□D□□□Sa□□□□□
#□□?□.□□□@r □□Ar□□l!9□f+□□□□□□□□"s□□sa□□~F[□${□□k□□□:Zf4□□n□
□7ж□□□□□□h□;□û□□W□
l□ly□(□□n□Z□□□O)nB,=M□□7B□id□□□wV□□□□gPq"□U□□F4D8□0□□nHNQE□□UV□□□
NQ@V%/□zn□ʝł*吊□D□>□□□3□#□□□□,□□□□□□□□□h{]□□□□Ґ□y□l□x'
□□M□U+□□□□x'OB□G□□□□□□□□□n□□bf□□□□□□□□□j;□+@r□□□,$□□睇
□Br□0□Ar□9□Ar□□□@r□Z□H□dZH□□ □□□1□□Br4[3□@"□□□□□□□□
□□j□□□□□□□□□]□□$G□Ń□h□□□□AD□□□□j□□□□□□$G□□□$□□□□□□s□□@rt^p!
9□)□□□+□wFH□0ᴑ□□(□□□□m□□Qo□□□Q□□□
□ᴑ□Ar□S□Ar□□□Ar4□3□□□p!9□□,$G3N=HN□>h!9:^□□□□□,$□□□□□□□□□□ 9
F$□□□□#□□□□?□□□$□□-$□Q6□□□□8□□□□□□□□□□L□Br
F□@r□□,$□□k!9□□□Br□□□$G□+□□S□□,$□□à□@□q 90□XH□□g□□□□□□□□ls>$□F□□
□□0□9□□□'□H□x□-$'□(j!9□\□□□□A-$G□□□$□8□□Br□Z□H□□□□H□□□-$G□W?□
□□Brt□□H□k,$□xn@'□<z□□□K>s□□□□□□BrlY□□□□□□□□Br□□Br□tNy!9G□x!9?
a□|!9X□□□□□□Br0□!9□^H□□□□ 9□□Z□□"□|2□ŕ□J|□□□□ 9m□d□X□□kJ□□&!□:
□□□y□.B□□;□□□{□c□C□□□□□- l□□L□□□A□□□̈x|
□□Nz@@&□□ □P□H□□2□+□□ □□ □□□□□□f□j□I□xh□□<□v□□κ□D□&K!□
□□ □W□□□K□#G□w□ZV□□G8□□□□□-□□□□0□□□=\o□)□□"□-
□□□1□*:□□□+:□□9^6N□□Y□N□a:j~r□6□□□□K□□□Xj□lp<f□r<□□V□iD{□□tZ□檫
Y□□□wf□^□□1□A□□sFJ□Q□□□□□□NV□□H□T□疼
□□H□5□V□□□k□□□n□□e□□□□□□1wB□yO^4□□□+□>□%□□i□Y8□□□□□□□□]@□□U□9□□
□□v□2;f9□]□_)□P□Q□Q□□□□2)□O□zM+□b□r□A9□K|
□□ڍq□9□a□w□□□D□□□□□&□□□&□□□□}□2□v□□3□□□□□A□□□#□*r□□□3□□□2-
Vj□r□VOe□□□WLs□□□>□□□□\k□y□□□□#z□{□□□□□d□%z□3\#□□J□□□□5□x3□*□□
□□□@n_□□□;W□=Ю5□(□□È* m□B□F□Ey□□□q^□ □□□<□W□□□□□0|
□0□□□□□p□□□□□□n□□S□]>c□□□□□□□<□,□□5□u□p□ L□□ □□□□9鞡□
□;"□□□7z□6r□:□□bP□-
P□□□[□□^□:□<x□{E□□<,m□□□□Q□[Kp□R□□p□F□□1b□Z□B□□□|□V□%□□□□□□□
□□H□z□□\□□□!□□□□□wTÔ□□□Vr□^□=□9□□Z□□□□?□a□
p□V□□□□□OO□□□□□x□X□
□G□□□#□□□□b□□□□ɛ́K□<2[□□bKR□□□□g□□□X\□□□Q□□□□E□6luE□□□□□Hy□:□Pt^□□□□□Z
□□□□□□□□l□□□]□□□□ ?a□□ZuZ□□□□□ŭ□□□n□F□fS□l(cY□□-
Â□Q7~□□□□□NE9Y□S□N□U=□□□d□□<□□8T□cY□

```
◆◆□◆◆◆◆i□□x◆◆k□~□◆◆◆◆V□◆□◆bV◆I9◆lH◆□
◆AH◆lH◆2◆□◆◆◆Y◆+□◆□◆◆□◆◆◆Z
◆@□◆ɱ◆□hm◆◆%◆◆◆!5G◆z◆DQGǩ8Q◆◆◆◆ĉ◆=□◆□N◆G:◆◆4□N!◆U#+◆?◆□,◆◆
|4◆&◆ǽ□k□|+◆K◆◆◆K◆/e◆◆◆◆◆ ◆□?
◆◆◆&◆◆◆◆□,◆V□◆□◆c◆zo◆B□◆|odE◆FX◆W,%k◆◆n◆◆T$Q□□,◆M⁒4,m□□□◆Xr◆<◆"◆
◆u◆$◆◆◆◆◆!ee◆◆◆◆◆) ?◆YP□◆c◆◆|◆?◆□◆◆?◆6v◆V◆ǒ'◆I ◆◆X◆◆◆j◆□□◆◆◆R
⿱□/□□Y, □4◆◆◆◆S◆◆c\◆y◆MЯ+2◆iA◆X]◆ï9◆I□B◆RV□◆□□◆◆◆◆{X-◆□xi◆□□◆P
◆m◆◆◆(◆□◆□◆□◆乾^!
◆◆◆+~lY◆g=5O†◆ɥ4rK◆|/yn□◆#\K◆2~.;◆2x◆□a'□□TD◆□◆□z◆□j◆n◆◆◆a4
F◆w◆ДK◆◆◆mc◆◆◆◆◆◆◆◆d□◆QI□◆◆eZl◆◆◆◆◆◆◆□◆◆◆]E◆◆f◆◆◆Δ◆◆◆◆◆□G
◆◆◆_◆dHb2e◆◆k◆+◆◆oc◆◆◆◆O□x◆w◆M"-□|
◆□#◆◆7□◆h_◆□◆◆◆◆Y◆0wƀu◆⺀◆Ɣ◆Bv̀◆Hə◆◆1%◆◆◆◆3◆W.◆1)9◆◆)9□o V◆◆
◆ZJN□◆◆◆@◆s(9]◆◆◆◆◆◆Pr◆□%□◆ɖ◆◆1◆◆◆◆6ʟ!%'◆ɯ◆◆◆◆Pr``◆◆□□.]J□N◆◆◆
□□7□□□□□C?E□C□□8□□□□□□J□,;□J□□□-%Gk?
z◆□◆A;◆□X◆9◆◆K◆◆◆◆◆X◆◆□◆u(9◆pt(9□◆◆◆◆
◆◆◆e◆nJ◆H?k□J□\◆Pr◆◆□J□◆◆C◆□_□□□5I◆◆□}x◆:◆S 6◆'%◆s◆I◆◆{j=ƛ
_)9◆□o□◆□□i◆!□◆*◆◆ ◆□b◆r◆i◆◆□
◆□p◆□CSj◆Q◆n*◆◆◆Aɩ;◆2◆◆g◆◆□V◆◆◆◆◆Pr◆se)9{◆6◆f◆Jc◆"□◆◆E□□□□.\JY◆~
3S◆#◆<J□◆h□J□◆□J□◆#-
%◆◆◆□JN3◆□◆◆◆V◆◆□◆:◆□xg◆◆□wv(9◆E□%□◆◆Pr◆_j)9◆pp(9◆#◆◆□◆N□◆◆◆□ʊ
◆@N◆C?□J◆◆□◆
K◆◆◆◆K?□h◆◆□◆T◆◆□◆6◆◆◆^>K?;;◆□◆◆:◆□◆◆ZJ□xD□J◆P◆C◆□_◆C◆□□◆C◆□□
◆◆◆□□%□□□Pr□□%□□□□=□]1=□k1K□□□□□e□~Rr□_□□|□□□c□?&%□□sJ□□c-
%□r)□J□□r□JNV□C?□ZJ□□L□□□□□8□□X□:□□□;◆□X?;◆□ps8◆□X◆;◆◆◆VK◆◆$3◆◆□[w◆
◆◆◆*C◆9◆#◆◆◆◆◆◆◆◆)◆◆◆◆鶆◆◆◆D◆◆□◆z◆◆□◆C□%□◆ 핚
◆◆4◆◆◆◆4◆◆□kQ◆◆□□<◆◆◆◆□◆◆□◆X◆◆◆◆z◆◆□◆◆□)9◆+◆◆uSr◆{□J□ɳ◆
◆\P◆◆Rr0◆◆◆ )9◆xu(9◆◆c)9◆[◆◆◆]◆.%□◆Ṛ◆S◆◆Pr
◆◆Rrt_◆Rr◆◆◆Pr◆Z□JNQ◆C◆□◆◆C?◆◆◆◆◆◆◆蹊◆Q◆w◆□w◆◆躬
C◆□□г◆5◆s)90◆:◆◆◆\◆◆◆a◆◆◆◆n◆□)9◆|/Rr◆9◆e□◆◆ ◆◆Pr
m4◆□◆:◆□H◆v(9◆0m)9N◆EJ□□0□J□◆□K◆◆◆L◆◆□}
C◆◆◆◆PrD◆◆□◆z9◆□◆S□J□◆H◆Rr0lf)9◆◆i(9G@◆Rr◆◆◆Pr◆ô◆□◆8◆□x+◆◆□V◆
◆□3◆C?w◆y◆◆□_{◆n□◆◆P◆◆w~Pr◆◆P◆◆□◆◆ 1◆ ◆□◆6-□N◆Hw□◆ZX◆□◆◆◆+□
M◆>□◆,◆□◆◆A◆@◆□%◆◆}Pr$□◆□◆◆◆⿱
◆)9I◆◆◆◆◆□◆◆K◆J)9{□C◆◆◆J◆◆◆□J◆◆◆h□◆cRr◆Z%>□◆◆◆□v◆◆Y◆ðt□tPr□s
k◆x◆C◆1◆□m◆◆j6◆K◆A◆/T8◆ѥ◆◆◆Rr◆ ◆Pr◆◆◆Pr◆G◆Pr◆◆◆Pr◆Z-%GU◆.%□}□
◆◆□y,□%□◆'-
%□□□,%g□ɯ◆◆◆◆(9◆◆s)9◆◆c)9◆{]J□x]□J□□□9□□□Sr(9C□□0)9]□□%□□9□%'□□Rr□Sd
)9◆s◆Rr◆y◆□◆◆l◆□(9◆◆u◆◆g.□ɗC◆iju(9E◆□%'◆◆RrP◆◆Pr◆◆9◆□◆◆r(9◆◆j)
9 ◆◆Cɹ◆◆Pr◆□:◆◆◆V◆◆□◆K◆◆□#◆C?□g◆◆□
)90"YJA□f)9◆◆f)9◆ee)9U◆□%◆□◆◆J□◆□
◆Rr⿱□ʂ(9◆◆v(9◆\◆◆□◆◆Pr◆{□J□ɗC?◆a)9H%p(9◆r□J□◆)□%□□C◆ij==T◆◆□◆□◆◆◆◆Pr4
◆◆□◆@v(90N:◆◆◆V◆◆□◆u(90◆;◆◆◆V◆◆□>dK◆A◆◆C◆□□◆Cɹ◆j)9◆◆v(9◆□w(9□#
p(9□□g□□K□?□□ MY◆s◆◆◆◆◆◆◆禰◆#□◆◆◆Rr^J□◆◆◆◆◆□F◆◆◆C?})9/%◆伔□□
◆_J◆O□T_J□◆◆K◆◆}◆□◆◆,J□◆◆□◆□]◆(9E□c◆)J□9\◆◆◆C)□m◆□I□◆7V
X◆◆πR◆◆◆~□◆□◆◆◆3◆□◆<◆◆□◆◆◆□%□+□◆"◆◆◆b◆◆◆R]"C+□,□□
◆I□◆◆BxR@◆BxR@◆□)++□◆◆m◆□◆◆[◆g◆◆◆□R@Z?o□◆◆□◆□x◆(◆j◆
◆□◆◆◆)□◆◆P◆◆ǯ◆◆b□◆□
```

```
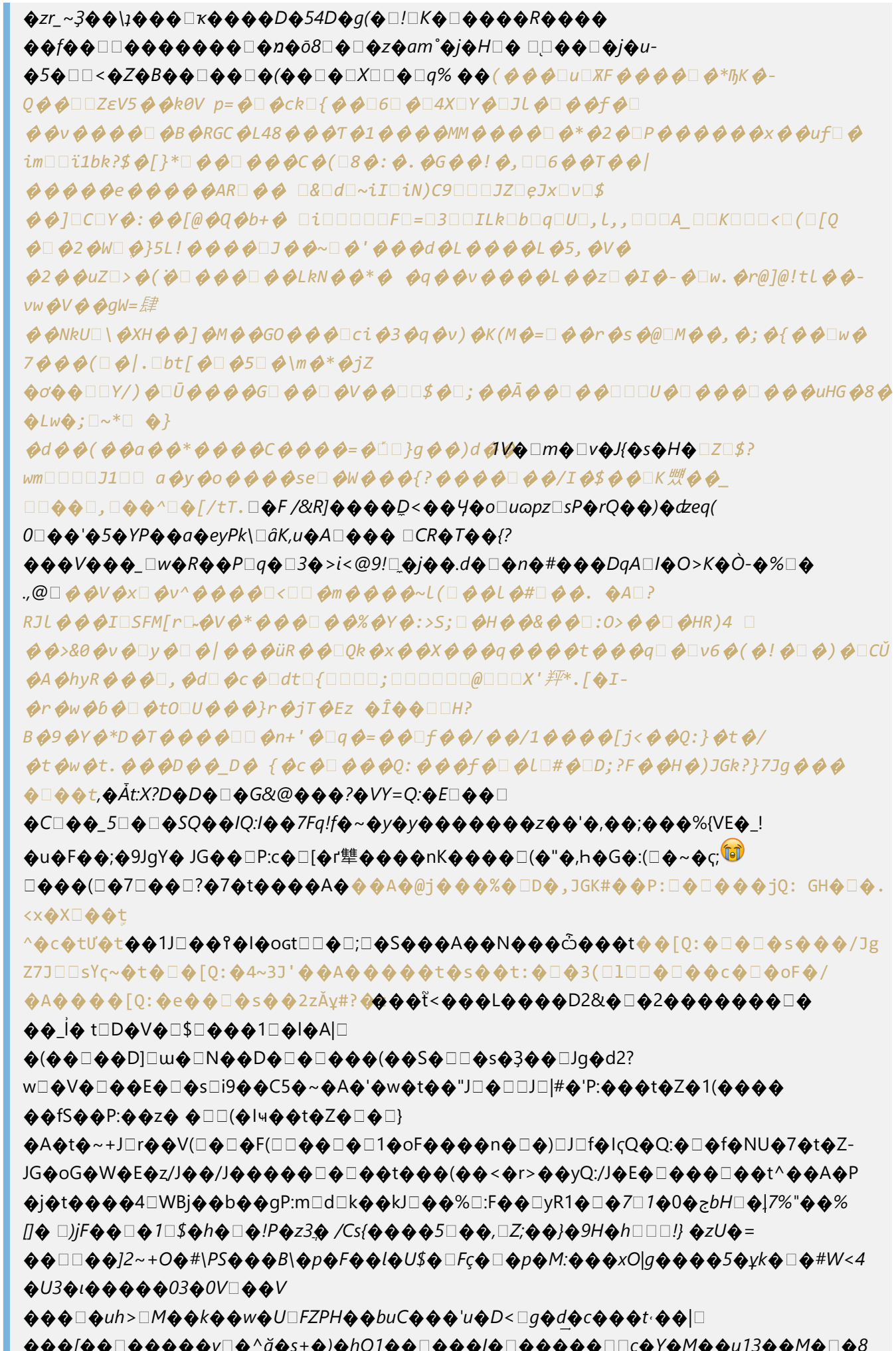
```

□���K����p□□;��8��r h���;_ 9□9e ���□2O��;pp Y□C��+��q结/
34��D"��ɪ��< ^[|□V]����;O□���t��I□RϑⁿG}E<t□□|□,'^
4□6□□□□5MVd□6□
□□"□□t□□v□□l□□□x7vi□csQ□]4(z□□kE&□□04□X□□□□□~Q^□□X1IrBsh□□R□X$□D□
□□) □H□@□□□O)□□Y3□9v□□□□□□<□,□□S□u□□□{M□Q□□□-□Ys□~□~Q□□7E□□□}
æ□□U⊡$□+□□□□□□]□w□□□□□□□□E□
□j□L□xV□□(□Ц□□j□□7D□□ə[□□□E□□Y□U□□냿
7□□d□lk]□□□Z□1□g□□□□□□□H□□□□R□_$T4□+□□s□H□□□□<□@Ə□□T□□g:Xm□□□
^□'□285□□Ym□□□hv□p□□%□□□O□4□P□Y□ □□y□□□□m□z9jA□□□□HV□H□"□
i□Y□□]V□^□□□:□eC□□□□□□□ 9□L□ □I□□□,□%;-□"XO□<eRjVDy(□Q□2□□5□□□□4□
□s□□□□□□□q□□□□<□□□Q5j□:□□I□□□C#O□#2z□□)□R5I□0□6□□□BW□ȣFG□cp□□n
□□@ □□□□□'P□□□□{□□□5□ @□□=□w□J□□□1□□□□□ᴍ□ □□u□Vi□
□□□□□Z;Y□□□@□Ƙ□□9□□dU□□□IJVm□}□□8"□□:z□□□]-
□□□G}iB{□□□□□□□□□□z□□□Rv□□Q□□W;□□A□[□?f□□o,□vZqx□
η%□1□□□□)□□□FVt{□E□□Z□6□□AKE□e □ᵹ□J□□f□!□□%□□□=□Z□[□
□6□□□j□□□□□) □□Y□□0h□E□□□□□□□□□□-
□□X□□□d□□dЬ□□U□□□□]}w□□y□p□'□□□□□□□}n]I□□□"z}□□□!.p□□□
□□□□□□□□,JY□ □w□□□□ᶎ^□□□□&]□□@□□Z Y"□i□n□□□H□(□□犈[□□□j-
□wn$□[□□{ɯ□□□□□□□s□Ŕ{□□!
□□ʕV□□□□□_□KM□1Q□□□□□p□□p□s□v□□□□%□HR□□e,s□d+□o□□Bo#l□□Ŷuf□OkC□
HX~
{□□□]□□□g□□□)□e□□=□n□4□□□□□□l□□l□e□□□b□3□□□□□□□□□s□□□Y□f□□□T
□□□ŭ□C□□□C□□□□□□2t□Zx□:□C□
□□U8□EV□8l4□HL%□□□lj~N□□□;,X□2t□□'C□Jl□v~□□□□s□1□□□□U□□T□+□E□9□□O□ɒ
□□\□□□0□u{6CG#□□□□□□?g□L□Ƙ□□□□□□□Q□□□Y□□□□5 cO□□□□□0t*[3ɻ□?
ag□2t□□□□□□□□}3C□□x/C□e□□□□e□□□□□-
□e□□$O□□□y□:/C□□/C□e□□□□ˈ□□CG□ □86=□□W□M□□□□□□□9?
s□_2↗W□□2□□□;O+□B□□2t□□${□□GQ□v□□#0l!fd□□□□□□O□W□Y□□}P□□□□
eɳu3tv^□□3t7C□<'□□Б□□□:□k□□□□□□(□(□□□Ƭ{□□b□KY□2□□d□o$□□p,□□(9□□□□
□□□y□:j□?
□□2□□t^□□□□□Б□□e□Pi□□□□}□:Q□/C□e□pᵡ□□□□2t□□2t□□□a□□□y□:□□□}□:s□z□:
X□/C□'□/C□'□/C□□□e□□>□□□u□C□^□i□.]
□"□□□C□□.K□□□□□□□□□□□□+□,O□g@)yj?□J□□S□□P
X□□πR□□□□□□□R□\□u□R@Z□. □□□□□□□□ec!<)□b!<) y\□□□□□□□6O H□-
□3R@□nE□AY) □□□□□H□7□□□*□□□□□<□□_□ □□>□U□X
□□□AWO□□O□sεK□□P□□□□t□□\G□□□□□□3□a□□□□□l□r@□□OC□□S@□^□kO□□□k
□□pmdm□=□A□F□□□^□Y□:□mY□X□□□□0□□{[□□/□|□□□□□□Z0>□□\□□□□ □□E□l□
w□□A□□V□0□7¶n- □□□U□□□□□Q□□U□M□□[□□|?□
□□k□jD□□□□□□□zX/[□[C□K□□□aa□□=□Y□□h1□□□□□frt□□D□□□y□c□]□C□□q□□□□Zϧ□W□#ꕥ
□□□□□□□□□Z□aF□□□□□□□□□□F□F q□□K□□#ijĿ"□□□2□□e□□□$□P□□:6□□,□□6□贓
□□□X5 □/,□X□□U□□r□□□□□BD□□V□□$□'□uL□ □ə□□}Qb□[;K□□□!□□x□□□Dh9y□□□
□!□'J□a□]□Q□i□□□⁒S□=□^+Y□□Pi□□~!□Yd□%□□~□□□□□□□□□K□h9□□□Gt7N□□?
~P□□□□□□^b□□□□□J]□□□□a□□□}S□□ □□□[f□□[□□□□(
'j□I1dI0sz□□□C&S□□□s□ky□□w.□r@□□□□CV□□□F 6 □#□:□U1deB#□□wqW□□□=□□:
{□□m□□ə□Z□_□%□□Pᴇ□@□□□□{□^□□X□Y□]wp□t□S?□|o□□□□□□□□[]
□□C□HU□{□□□{□Z5□e□□□□□□□□□□u□G□□□h□s□□□□□□G_□□XDv□□□□t□□W□j□□□□□□□a□
□□□□:w□D□qX□□>W□SḳR□('□*□□a?

```


```

```
*4*V***_*_**C**N>$**** ***K*m*1**$Л***臀**cx#+:E***ZB-
Y*twK**"*2*XB-m*V*YBm*p* ЛJS*&*B*5*Bm**
b5***\&P*,*****B*P**E*P*****
*)2T*'*V****E*'*******K*0*i*****p*>****xl*}
**0.*%5**:*F*$**X*Q*ƒ0*Tt;**&*Zx*T***Vz*"l5*********h**碌dS:*+>pY*
戲y**hFrцn*******z*8
=*s**;*C**L****VE*V*s*Yq*********************n*&*&*%*H*Y*****eo
**~+*****U**ч<*ëwn*****ㄴ/
***ӂ*2ɒ<*****L*{**&=*******_k*H*****Ph*
x7**********6****_**N*****"*_ 쐈**v^**Q*/a*{*?
**#*&Q*BJ**vę*zb**kYG*_B*y*v [{*w~*v"[*x ******\*-
******ʐ**61*v*k*VfaE\6a**5ty*, *F*E*v*s***Й4X;**raⅦ**KCTs
*ɔ*DS***B+Q*f*NJ;****v*vB*S*xS*1*x*KK_**K**[*v*/a*I**/ag*3*v
*Z_**K*/a**02***i**v*[*g*|#******I*)j**O****
tᒧ****Q\**v**A*V?&ag*********&f*Q*E*!***₩>**ᓭ*I*$?
*>*K*m*w*_%*H&*v.y*****aG*7*/h*v*Z*"*&***$*_***;*~*sT*f*
*v*********a***%켄***^*z**@Z*^*N***%**a***o&*g*%켄
**v*{_*o_*Nx ;l} ;/a*** */ag*_/a*K*%****A*%*******G*!
**"*Ьl|0*ѥ**SD1**"**e**>*****c****(*,O*g@)yj?*J**S**P
8}P***R@**K*.V H+*%2*R*****ㄴ*l, *'*T, *'*$*k***R****I*ᒧ*|F H(*>
(+*******)*****U*Uh?***O)*W**鱸v*$*ö*_ *Φ****\4*R>$*'/d!*
*7ɔh***(**kX*****6***P***n*b****q@*3\*Y*
**********^*Y*:*mY*X*****0**{[**/*|*****û:*7jc**.*'*+*LQ.[*****@*n**
****y*1kPG*j$8****Э"m*d*yN*G*h9*ZΠγ*0X)***^*$g&*Y{**7***=*Y
*l*****frt*D*****y*c*]*C**q***Z5
*#ꕥ**********Z*pF*********F**Ⅎ*hRB/****  *V**D*****$*P*  *N*****
*c*"***x$$,X*@*****************I9Â*HJ!*㭆*!*****u**4X*s***vIJI*$**!*
*x****Dh9y***** *1*~r**$*\M*;*\**:*Z**J***m}*m*****C?*m
Rh**U***e S*s***4v**k****W*j*w*****蛛pOv 3*
**=*R*****'*J**@***Y**u**u****9귬**;*****s'*V**jYs'sM
*#*:*U1de"%**wqW**=**:
*ksM*w*ke*Q*P*Z*"*i*U*r*h*******u*wO*=*r*********X*>w'2*vui**\
**V78****:*s+:**S*.M*******g"D*k*/HP*v*h**By****:*%*****n
k*^***=***a*g:*\*O**J=0[K*y>**x*ə**d**w*G{**C**A***F**ʒ*+****i
*M*R**s***%*Wk**E***i^*****F.k!LИg****q**f**W***{?
*****,*/I*$**K뻈**_ ** ****n*,*d to**Q**y* ****Hu-*Fo)_wy*****!
*>*o***** *****2r[*****ʒ*y*aS* *y.b*eyPk\*âK,u*b@**abHϛ**q*********
*********]*:** *pbF*'**('肮*\'*****U( **%**H**Y****K
*\X***p$**o**v^*****<***m****~l(***l*#***. *A*?
**d***I**kK[r**V*****%*Y***N*@*#Yv*
GBC*₡W***I*4$!@*****X#/*[******5Gm*y*H4*"}
*ĩ*6**r***ƨ**:*a*x2*2**-O*^*ₒe**w*]x****1t**7w*v****HbQ*넼
*U*e**r.*zɻ<*PL*dQ*'QƊ****#+*&N< *****f%**R**b*c*
********a***c*ŷ***z***R**n****F*DF**Γ*ʒ*~*J**K*L*N*E*N*
k?
F*****o*****7B*@***c**********t***w*t*;**P:Q*J*****J***C
*N*Z*3***m*K**(****Æm**B*E*\*: *J'*5,*\*ae1*~*}g*a*
```

```
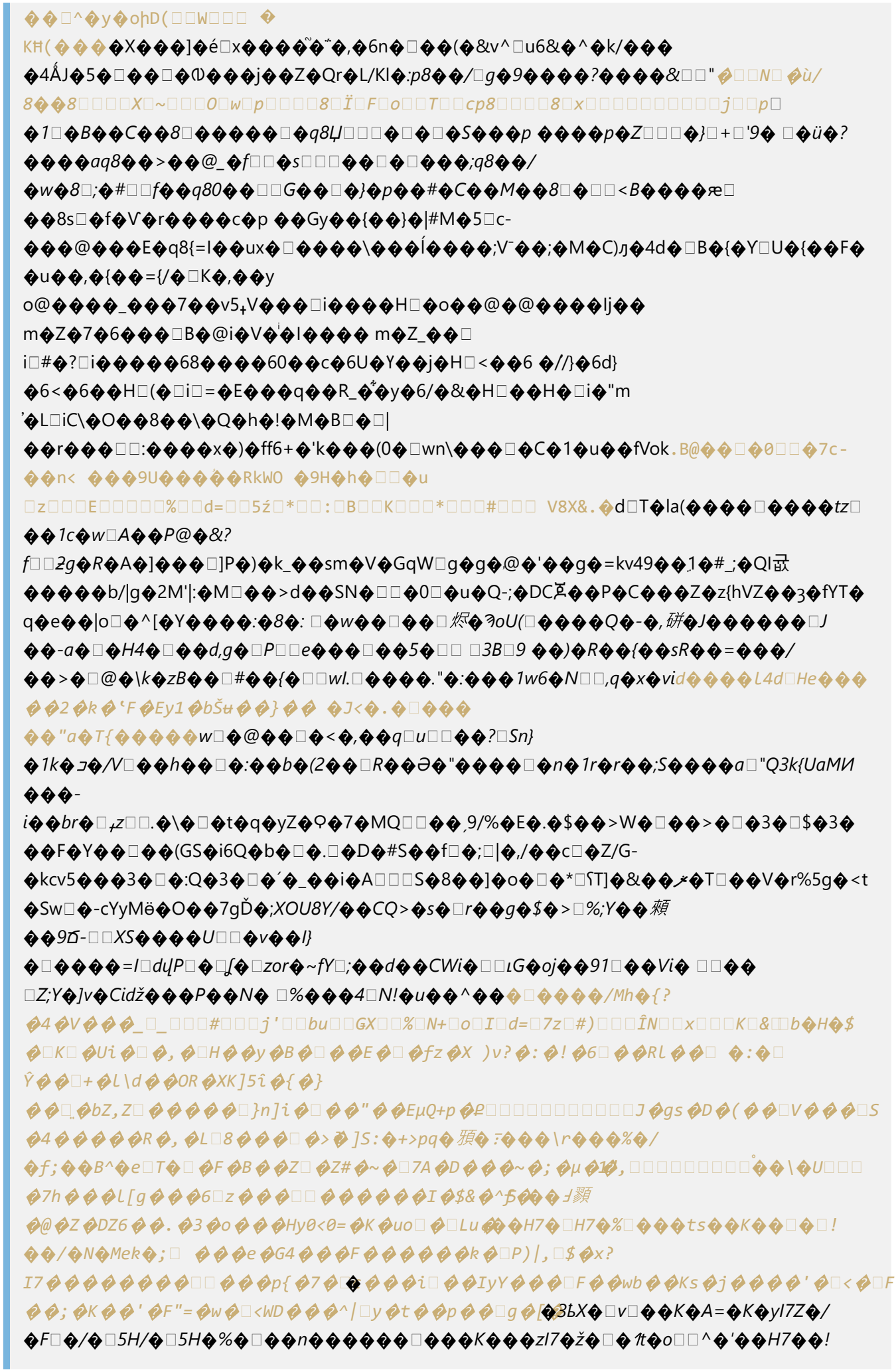
```

```
◆lp◆MP◆◆%□g◆◆◆m◆x!ǔc◆#H□◆nē@G_◆◆◆□◆~◆{◆◆|□◆□iE◆
◆◆◆◆□o◆◆s◆◆◆9□g□◆ ◆◆
◆|□zn□◆◆e◆=,f◆◆□◆F<'◆◆◆◆□◆◆9]J◆◆□V%:◆◆◆RE◆<◆'K◆◆□◆gIVж◆)◆◆9◆
B◆1I7◆7◆◆v◆w~I7{◆yI7◆;◆◆◆◆{◆◆^◆ [_ƀ◆/
◆fZ◆K◆◆:◆◆t□3◆K◆yI7◆S^◆◆K◆◆◆5>◆◆◆◆t◆n◆◆◆n~◆8◆◆/◆◆%◆◆t□^◆
[_◆◆K◆yI7◆tC~◆E◆◆W◆◆K□馈r◆?E◆!◆◆ç}(◆+◆◆◆#I□◆◆J◆◆S◆□P◆W◆□`◆◆◆◆□□
蒑□3□$o□□ăa%yT$□x]□$□V□K□g%ye□□<I^□x□O□□x□O□G□□
ee%y◆□◆u◆◆$◆◆[Q|PV◆G◆◆-◆3◆◆◆□◆◆J◆h?◆◆□OI◆W◆◆罏
v◆$□ö◆_з◆◆◆◆\4mR>$◆'◆c◆□◆8◆◆◆,ɹDC8◆UUsQ◆M^□(U◆i◆◆◆□h◆□p◆□◆yM◆□◆
◆◆1◆g=□◆□j@◆□4◆]◆◆-k□◆◆"U◆□uzo◆V◆◆o5◆◆◆□□Y□◆eK◆7□□
◆◆/[◆◆Xy◆q◆z<◆□◆t◆◆T◆□n◆m□◆□◆□D◆□ □&◆◆:t◆XW◆◆R◆;
[□◆◆k◆jDq◆□□□□zX/[□[□□K□□□□^□□=□Y□□□l□□□□v□□
◆◆v◆◆◆◆□◆B◆RG◆R7μ$$□◆6□◆·F4◆Zz◆b◆□□◆?L◆◆◆◆ )◆◆◆l◆ p□□□□□;□□~H□
T◆:□E□'◆R◆0◆◆$◆Pʟ:6◆*◆(□a6◆躜◆□◆I5 ◆/<□X□◆□□◆◆6◆ ◆t?;◆ b
5rBQ◆w□◆Od|□◆etn◆0+"◆"N◆s◆□)□c◆◆(◆7R◆2◆◆◆◆-K◆□8□□t
□[/^□IP□tD□□F□I2□□□□□□□o□□□XT□U□□□8□$ǔȳa◆◆~□◆*i◆◆◆5◆□F\◆4◆◆◆R□□>7i
◆◆F□◆◆5◆~◆F4◆;◆◆◆}◆◆◆0s◆a◆□Ж◆◆D◆"□j◆s◆□VeAη◆◆◆◆2JtQ◆□!
◆◆◆◆@y◆EN-□◆◆w◆g◆◆◆=S◆e/rh32◆q◆v◆E□-
◆y◆□s◆◆◆◆Q◆lE□r◆sW◆□M□◆,g@◆◆rO◆{◆◆◆=□-
~◆#◆◆◆◆◆W◆S◆Ʈ◆□◆◆:◆◆ɛ́I□□□□□□□{□□]□□>□□G□□□_D□□□□}4G□.sw&□i1V□&□/◆
◆ ◆n◆◆^%\◆◆◆◆8◆M□◆◆◆◆& an7/◆◆'$◆p6;◆◆6□G◆Bx□:□◆◆◆□□◆nM◆◆S□◆□Vc◆|
◆6◆]S ◆.]□◆e.◆ZK(◆◆□◆D◆d'0'◆◆C◆□$□□ək◆◆U_Y◆?◆◆K◆焯
5◆/Iml◆M◆]Die□□◆◆◆□◆◆□,U◆@◆P◆7H◆N\x◆e◆l◆◆r◆◆ZzE◆◆Rf◆◆◆□|.Bf{ʇ□◆
T.◆E◆◆◆RB=E◆◆◆□◆^:◆□O◆j◆□◆
q◆x□j◆+◆wp◆◆◆◆◆◆K□□b◆û◆◆q◆□=□◆◆◆□◆◆◆□]◆:□:□◆Cb◆◆'◆□◆
◆5◆□\◆□Z◆◆◆◆◆9◆◆◆Dq□◆◆X◆IP□CB◆A}wKD_□/67◆8^◆◆◆ ◆□◆I□◆p#DM혂◆◆F◆-
yl◆◆□u◆VG◆◆□Y◆◆g□◆pZ◆4v◆C□◆Y□◆t[◆zn◆ {G◆@◆◆◆,VM□◆v ◆,◆A◆□9,◆|
□□□□□@J◆◆ ˙x1◆◆j|dA~u◆.◆5□lW◆9js◆w◆K◆;8◆◆3◆◆N◆□◆4□◆)'◆◆◆◆(◆yR◆r
◆0t<
J□□□□□□□□□□□□□□V□□□□□{X□'□n□a□pw1\8□□□8:D#◆ʸ□◆Xʳ\◆□□жj@◆□◆T#◆a◆ʰ□U□
◆□@<◆◆<◆◆я◆◆◆◆P◆ □'Ux+v□□□8□@□□□□□□□q□□0□o□□□□□~□□□□□◆◆◆
◆◆□<S□□<S◆□<◆◆ɯ◆◆◆◆◆◆◆7□◆□ƨ◆◆□◆◆h◆g◆O◆g"<◆□◆$◆~
◆◆◆:◆□◆afY-□z◆s◆LU◆7◆g◆s◆□x□lj□◆3Z◆◆s◆◆◆□xf?◆/◆◆◆◆□x◆□◆◆}
◆◆◆□x◆◆◆◆j◆_□◆◆[9◆□(I□◆Oγ ɞg□[□◆~ɲ◆◆◆[◆◆□◆□◆◆[#Gw?□
◆D◆◆c◆g◆_a◆□◆◆n◆Y◆]◆◆ ◆◆◆∃uS◆b◆◆◆g◆Z□◆◆◆:□xfʒeL◆◆;◆◆Z◆
L◆3E◆◆◆◆◆◆◆◆◆◆Uc◆◆□◆^]2◆◆%#O◆L◆Z□◆R,◆◆□/i◆T◆□□<◆◆◆Z奩i
kC◆◆◆◆õ◆o◆4□◆/i□X□□>□4□X□□□K□□]□K□□□□K□□□^,
◆"◆□K□◆◆□K□Ѥ◆◆4□O◆□K□◆◆ij◆f,
<◆◆◆4◆4◆◆◆◆◆□◆◆◆◆◆◆◆◆z◆◆\◆◆◆i◆X□X?;X□◆~'◆□◆H◆◆◆◆:◆c, ◆◆□,
◆Q>◆ƛG◆biU□□□K□□R□K□k□o□□□s-
◆□s◆◆□K□kя◆4◆◆t◆4◆◆u◆4◆2◆□K◆◆z◆◆□◆◆◆◆◆4◆□
◆X□◆◆◆◆X□hW□◆□◆;□K◆◆◆o◆◆@◆◆◆◆◆◆◆v,
◆:X□◆~3◆◆◆◆◆◆$◆:X◆◆Ɂ◆40◆~◆◆◆ε◆◆◆◆◆\,M3◆X◆b◆◆◆◆4P□□◆□◆◆□◆◆h□
□x□V□a□&m□□□d□□□□mr□e□ɯM:◆□◆◆~3◆□z◆□◆A□◆◆Bk◆x◆◆□□◆◆Bk□◆◆□◆□◆.□◆
◆◆□□◆□◆◆◆◆□◆~◆◆◆◆eyN□◆□TzE◆◆◆□◆"◆□◆◆<ȑ◆{@k◆□◆◆◆ ◆□OB
◆+W◆>M◆M◆□◆◆qbF◆H◆◆□◆□◆◆yp◆◆Ak◆W)◆◆X]h◆◆;_◆◆ ◆lj◆U◆H◆◆◆)◆◆
:◆AJ◆◆□Oh◆X□#"◆◆◆hsR◆s□y□□◆3y□◆◆◆R8◆'#v◆f◆H◆J-x◆□ mf-◆"◆&□+"m◆□◆
```

> m�c��H��V□i►>�ʔ��ju�6Q����i��QT��VN���+0►>□r□jn□_□□@□□□□□F□
> □]□Mw□□□□□□□x□□□[□7□&□+□□3^-□□z□□o□□□□□□□□ □□□□
> □□□o2□□□x□3□o□□□□□□□□□□□□{[□□□□□□□□□□□□

```
◆◆□◆◆o◆◆□e◆0Z]m◆<◆j□◆\P<g◆◆◆◆GM◆◆◆5◆Y□q◆◆◆◆◆4W◆W◆◆ip◆◆(◆◆◆h◆◆◆□
◆c6◆4◆#fH◆◆□OЧ□□Ц◆◆NW◆□◆◆□◆◆q~Z[:□d◆◆◆,◆Z◆S◆◆G◆k◆%◆◆◆◆)◆□◆◆t◆◆◆i
◆&◆□g□◆◆N◆7□i◆cY□(pD?gN/□l·□8◆◆B◆◆◆Q◆B◆◆-◆c◆◆Ÿ◆I◆z◆□
◆◆◆◆◆b◆□LV◆t◆◆,◆[◆◆□◆◆◆,□<◆[◆□3,□□<^\◆-
>◆◆M◆◆W◆◆◆◆◆◆)t□◆AM]◆◆I◆X◆uyCRty◆◆S◆□□◆S◆'◆◆8uy□l.O◆-V◆偰
@◆◆◆[◆◆◆K◆◆I◆wY◆◆(◆˜<◆g◆◆◆◆.O:◆□◆◆ □◆◆◆◆#◆A◆偠A◆◆ lUty □Qty□[□]□
◆O]□□G□]□□◆O]◆◆Ω◆□◆z◆◆
◆]◆◆□I◆◆□◆◆◆□◆◆◆◆□VE◆□63E◆□6◆S◆◆◆MM◆□◆◆N]□L◆□]□◆◆.◆◆◆Q◆'□ü◆<◆B]□O]
□xW◆.□S◆◆SkM◆◆◆◆ tyx◆Puy^)◆<◆◆v◆□□2□◆◆◆?□◆□□◆</□?□
◆kuy□◆◆:◆□◆◆◆uy◆◆◆◆◆y◆◆◆(◆uy◆□7◆/◆⌂~◆F◆d◆[◆◆M◆◆◆?□◆◆◆◆R◆◆◆[y◆
◆W◆.O□◆к.◆-◆□◆◆◆◆◆◆◆◆◆◆◆□c◆P◆◆xtW◆[◆◆b◆◆◆@"◆$◆◆5◆2q}
{◆□a◆y((◆◆(◆◆◆◆◆□;S◆Y◆\□◆u◆4◆d◆◆◆L◆xl◆□◆◆^□U◆◆Ǻ(j◆#j◆□□p·WH◆o◆
◆^□Ǖ◆◆$q◆◆Z◆◆f5ul◆◆□⁄-a◆*Nk□G Q炽◆Z0◆3□◆ff◆◆]_◆]□◆d̃◆)◆
◆y◆◆m□◆◆◆◆T□◆=◆◆◆◆□F1◆◆◆◆◆1◆ 挐◆◆]□"◆tk◆◆□□◆◆J◆o◆□a◆□?
◆V◆◆hy,\◆◆#a◆◆□□89□□□ e◆◆◆o?LhA◆ɲ◆R◆◆N◆◆◆s◆1◆◆◆:◆g□*!$3◆u?
◆u.◆◆□◆□\◆◆◆A Y□□ ◆C◆◆◆◆f◆◆◆g◆◆~2|
ч◆◆d◆□r◆◆9◆◆m8◆◆w◆□*9□G◆M◆◆YS◆W.◆◆◆x\◆2◆□f◆◆^{◆◆.a
◆◆□◆6◆◆7□◆◆a□%-
mn◆◆>g◆◆.◆◆◆6n◆W%◆◆◆□◆T◆l◆◆◆◆A□7◆V◆:◆◆◆$*◆◆$□◆[◆◆◆◆◆◆◆ZL◆Ѿ◆z◆◆-
◆◆V>KB^%□y◆z◆y□◆□wŇE◆O◆□e□□x◆◆◆◆◆%□◆{◆◆.ME-
◆r◆◆◆z□◆□u|s◆#□◆P□◆r◆□◆7◆~F◆□\◆◆ ]◆◆◆7◆□q
□□U□C□□□□□□1□□□□□□□□□□Sqm□□□U□□□□□□(□□□L□%CB%殿
◆L;◆□□□□□Qpg◆we=h@□◆◆□◆la|◆,◆◆8◆◆;ǩ◆□ 癸Ns?
◆Dšw◆X◆□□◆h◆□◆ᗡB◆:F□◆◆i◆4+◆p◆□□d◆◆[3◆◆u□nO◆=W□/;i◆L+k◆!U◆◆◆◆◆O□;◆□□◆
ᗡ□◆3◆◆(◆z◆e◆ R◆if□◆□◆◆+◆wu93◆/◆◆□z◆◆,{3◆◆r□□ч.◆◆'k◆=[◆◆ ◆v|□◆u◆Z□YM?
◆l◆]◆ 1◆◆◆◆◆N◆◆潁□zY□X7□d□S□d□□y□□□q□□2W□□□□=Ŕa5}
◆%Φo□□X□η□&2◆◆◆⁄N◆◆◆c◆◆ □◆◆□□~#◆◆W□◆礎◆P◆◆Hg◆]U◆◆]◆◆i◆D◆◆◆ ◆◆◆Y?
◆□◆□◆□◆;
◆◆□A□e◆◆3h◆◆□◆ɩ◆◆M◆□◆◆+l□□◆◆$◆R□]◆&◆◆□◆◆{□I□◆@k#◆5+◆◆◆{~MV◆c◆\◆N□7
□u'◆◆œ◆i □◆◆ | i □
◆◆□□◆i□□◆◆◆◆◆r]3◆v□◆◆□□◆(◆(=◆<◆◆◆◆Q◆#J◆◆&◆◆◆□◆◆O□◆□[)◆(◆□□uF◆◆C◆□
◆◆z◆◆"\y◆□M□□□yki□+^@I=□fk□□#□uW□P□b◆]◆l◆□[◆ ◆□~%□û□◆wK□h0◆ ◆xd□
◆□◆◆[◆7◆:◆◆Ш◆◆d7◆◆◆y□◆◆◆F}◆ㄹ:◆□◆N◆□◆l~:◆0k1◆□uhυ~
[◆Av4◆◆cg"◆K◆q◆◆B◆□◆G□.~,š◆□◆Q◆◆◆◆◆u◆
◆◆◆◆◆◆□◆]□C◆◆L◆□◆◆◆◆p◆◆M□◆□◆◆c◆◆◆◆◆1◆H◆1 -□$◆□Y◆8hZ◆i|
◆"◆dI□◆□dm̥j8◆cnD□}◆V8Y{◆s⌋m◆◆◆◆◆OqQ□□SX◆◆).^^Z◆h◆◆◆◆X◆Ł◆□H□◆S◆◆)kXx
i◆H□◆N□◆◆p[□#□"◆u昰w+◆b◆◆7◆◆◆◆?H ◆□k◆◆□◆◆Kü◆□9◆
◆j◆0□□◆,.◆U◆◆□◆2F◆sðe8&~◆◆◆f◆e◆v□◆r◆}◆◆□ ◆◆◆□◆◆◆◆a◆rkI
◆◆◆◆◆◆◆□%k-◆8◆◆◆Ru◆◆"kqs◆◆^E◆ )h◆□◆◆◆□z◆□'◆◆ ◆◆◆◆Щ◆dE□BJs◆tw◆K◆
o□Z□M◆◆嬸◆◆□2X#X◆◆¯◆□◆◆◆◆□◆◆□Z◆r□□x◆□◆%◆O}}
◆□xMu~◆◆◆B◆_◆◆Θ^_%◆□◆◆□U□ğ□◆_Y◆◆◆◆□◆□◆:◆u◆fQ◆◆3□m□%◆Z◆@◆L◆◆◆M◆=
□◆t◆|y◆◆:◆)□◆(◆◆pY◆◆□◆q◆(◆◆DVk6vg◆V◆\h ,◆◆◆A0□4□3◆◆◆.◆◆D□t◆+◆◆◆E=◆"-
M'g{◆◆◆◆Ȳ◆◆◆□◆□◆◆m~◆◆GV◆9L◆B◆□◆F◆m□|□□y2◆□□□dM□o□/la□□□i□:□□□□
j◆h□□F怄◆◆◆◆□◆j◆q◆}□◆+z◆zb◆□]◆!jx◆◆P14szL◆@◆Wf◆□◆:◆◆□□p|◆◆'◆G◆}
◆◆□◆◆
Y38◆5□y◆◆◆{◆:^◆◆◆◆□H3m□◆C◆◆◆◆◆'□◆◆$V□ˀlc◆◆◆N◆◆d◆Z◆□□□◆◆◆V,◆◆◆x/=◆◆
◆□,◆/>◆◆fD
```

fD□z□pWU□+□□"□Gpe□□□□□8□'X□j□□□□□□i□□□□N□□□z□D□<□□□□□Q□s□Kl□X□□□□□
V□g3[□4 C6□0 □□2K{□?□□%□2Y□6□□V□□□,8□□□Mx□□□□□□<□□□%y{
□□:□□<□□v@>□□□TGlєA□D□□□4□□□□~□F?□B□□□□!□□□F□□l□□□□□dS□□□□□FE]
{□□Rf□□□$□#□□!>U9□,□□□□□□Co+ □?□□□□□□□□□t□□X□□L'|□ǻ
□i□□□□]□□□□□□□□□3□[ngs□□□□□| □□_:;□□□□□LX□□<□□□>?MC+□-□□□!□|□
□7□□□□□□□□ي命9□□□E□|y□□55□Cl□O4□L□T]Z□□f□□]□y8a,E□□□<"p^□F□#v□H
□□□□□□':&□y□m□Y□ش&YY□~0R□□□□u□□.I□"□B□□`#□□+□i□□b□□A̋□R#□Wv□d□□;□Rí,□<□!
□□□□/뎔□□j□D□ⅶRS□□~8□Rk□□□□□□6□□□□□ 1□□)□|K□u□Rj□m□□□□□g□놔
Z.w□□pCJ%□pGJ□□□□y□ \□□□,g@□□□□□□e-l□□9□□g□,M□y
X□□□7□□□□~□.,□□□hɯv□a□□"i□v□□□ᵹ□□□□@U□uW□□□3□□-
□cM□&□4□□□□□□□3□□□□□□s□□□□ă□□@□2□□(WQ□z□@]□□□檚□wC□L□□□?
\□□ᔑ(□□;□n□□□>□[□□□g□{T□; □□4J□#□□!
□*□XN>□□□□r□N□V7[□□\□f□□□j□q;□□q□□W0Rᓚ□□|
□□E□,□□V□□l□□q□p□~□□□□□4□□□"鮪□~□□□□□
□P□hgH□l□□ر!u□□□w□Tp□□□3□□K瞶f{□l]□□□□2,□□'□z□?□□□□□□□E□□G%□t□□□
$□U□5v/□□j□2□□□KyG□□"□□□];;%□RŨ□2□□□□>n¶□□□□m□□5□I/y□□3б□□F□□□,□□76□E>
Y□□□□□□□□□□□□<□□□F!k□□.□(□Y□□?K6 Y□□I□F!+J I6)□z□ȼ□B□□□d□X□□□ □(d
pe□F!k□+K6 a□/H6 Y#xQ□F□xt|□□□L□]8□□□4H□□□□%□□□□X□□ml□□ □x□O□□□□p□□□□□-
d□□□□□□(dEi<□F□x□□1□□□BV□H□□BV□T%□□I□»□l□Z□x□G□QÎ□,□(d□□□J6□Ń□□ml□K□□
□□d□X,□□U□Q□□Q□□□($□□ы 6 Y□□□□F!□□□6I6J□P□=?
□Vz□□:ż□□)□'□□□□L□□□6□□□2□□□□□e□~□G5□Z□□□□)□H□□y□□^e□QTrG□J6□□□U□
□F□□□H□□;□U□a&wдк□$□□y□W□□*□□
□□U□K□3Y□2□□i□W□tJ□□□W□□ᴍ□□□□q□z□□□□□G□□O□□□□s□ӣC□□A□□□"□h
□□\□□j1-□□□2no□._□□□□|
•i□□hcV□□n□~□□□89m□K□g□w#n□eXg□□□□)□□n□□□\a□O□|;m□Z□V□3□t□□□□□□
□□ICB<ru□i□-t□□Ш,:|W}□"kᴐᴐ□w□7□□□M□o#N7=□□|H□□+Y□^□□[□□□f□□R□hμ□E□□□□
Fp/u]□z□□V□" □K]6□N□^ 끇□□h□o□□□□□:□□Mk|
□□□□□□□[□t[l□□□□□□E□/&xQs□□□eI□t□□□□□□□a□□□□U;□DSfu6□□□□,k>M□"L7;ɆqP□N□□□'
□□□e□□□E□ę-□6I□ZJ□□□□kI□□□□□|0.j□j2v□/q□ □□+,□Jx□d0□6□ □□□Y□E1□|
□□yh□□□□ □□□u□3L□□□□□'□□Ve
□□□□P□□A&□ɜ□h□nte□□u|WD□□M□Qw□6□ȼ□+□ᨓ□□□□D¸□□!□y5□kV□□□□□w□□
□w□□nTs□□_□t□□Y□G□□□6□□:\□□□□1□□□□J□ k[□/ □^Q□□3□□□□ □G□□?
□r□□R□□e□z□□laA□r□Oa□□"*S□□c*ṇ.□4□2□□□ϟ□□k|
□[M□□□@□□%□□□ □□□ □□ũ□□□ □□□t]#=□□□&□□T□□□□u□□LD□□Ӟ□□□ □□Ӟ□□f=□□%
□f.□□□□a□□d2Fj*Y□□□D□ □ZQ□□sY□□□5□□a]D9□qYwʟ□k□□ ,□ □□□gm□barDȣu□&kAxg□□
□□h□(□□□□□□□B□□□□□□□□□1/?Z□Q□□□vz15_OI}*□S□□^□□□v□□□'□)□
□_□□2T□û□□□ᵀT}8h^□&□k□□VH□□l□□□□□D□□
□:□□h^□'□□hm□□□□□]Q□□□ṇՈ□□□no□□&□□□□o□□k□□□G [□"□,8□□□□□e□=X□\□□
j□c%□□□4□□□ϟ□□□□ê□□>□□□□n□□□□□"VQB□d□□W□J□□□□8□{□P□!u□C□:□□□5O@6
A□□f□?
□□□□□èM□□8T□□□z□i\9□□□q□D□□6+□@;□□2w□F)di□□00□y□□hY□K1□□□_ⅱf□□□□~□4□|
□Sl□ϔ'□N□□#□4Nh□+□qï□$□R□WGNm,□c□"□□□□Z□v□□□□□l4:~□□□□U□{□□□c□7@b:□□
□Y□□□Vn□□f□c□□□□□□□ □□□snH%E□□□□□□L>%i □□□□b8□rdv[□c□VZ□□J□ð+'□□
E□□□pZ□□□L□□□□□□Ie□"□s□□□□=□□□□_□~W□Y□□5□
Zl□□□□_□k□□□□□□>.k□QMṕ□□6□ШJ□□V*K□□{□|
υ□X□□C□□□□□HDɣy□v□5□□□a□=~□Vj□□W□□□□W□x□#N□"□□□6□□□□A;□3
□ŸI□□□□dJk□l.˝

+; ��Q�$ ẽEe\r ���+ ��□j# ẽim@@dn□□□H□ɗP□Mä□□□□□□□□r□□□□@□□□VZYL□□□□□□□
□□□s□□□□\□□□□/□□□□31□vY}□)□谔@□□□□₩8 \□L□V□G□b□Qw□&□Mb
X#□D□□ŕ□□□p&/□□□□□Q□Ƈ,□\□□□□m>□□□uJ□]□□+□□□_□5□ay/
ʟ□"H□□l□□□%□D□E□□□□□q̈F□□□□-□□8□□V□□□ᵡ□□□□*}□□_□w□□□□□9□y\□□_m□□1□]□□
v□□m□□□P&□□□□'□□□`□□¯l□
□□w□□□□□□~□m+□□□□{X]□□r□B□□:□Ĥ□V&O□)m□@e□&□lue□ṅ□□{□□l□□□Y□1□(□&E{W
□ʒ□O□̈□□1□□□□□□□k6□(□&[s□□□□□□}□Ϙ_□D_□q□□5,□sY□□!E□□d-
□□D□□□l□g□w□w□□Ne□□q□□□□r□Y-
+P□□□□□r□5S□[□4J□□□O□□w□□□□□s□□□□□□ د□□□?□Bl□□B□□B□gλ□6□□-@□=-
□□'□□i□ □□□[hCi□□B□□Zh□□□□[h□0□n□□n□□-□□□P□w□m□|□□□□v□Vn□□
□<□5□U□x□□□B□□B;□□□□□□□□□o□4.□_□□□□□=_□□,aD7

L□6□□□□□□(ʸ□2□□6□4□k□w=□□□□□□□□□W?□E66+4@□□N□□□□□YW6#6□□□□□□□T□'
XQ{s□□z7□□□□□□p:D□W□u□VL□□□□□
□□_2□VTv□□□V□rD<□□□□c□Tx□8□□□Q;□□G□□□□□□Ph□S□1□□□coh□□□□~□□□□□□□
v□V□~{□□q□□□□□l}
□□□□□□E□□h□□□□6□□□□□□□~;□□o□□o7□□□□z□□~□□□□□□□□□□h□+□□l□M□□□□
;□ □□z|P□oWd□□□□v□□
□□□□□P=□oc□*□□6l□J□m□b□□□□$)□□a□V□oC□□□□ϟ□□□□wW□□h□□]□□□□□□~□□;□
□□□□□□6□ □□6□□z□ϟ□Ci□]ϟ□□□s□ô̂s□□□□□□l□□□□□□~
[□□J□mp□J□□□V□□6□:J□m□6□□□□□(□□a□:□o;
□□□□□6³□6n□J□m□□□□gɬ□□□□]n□□□□□□□□□□gl□]□□□□□绂
□□□P□l□□□□g□□□□Ji□ □Ji□}
Ÿ□J□□V□J□m□WJ□mLD□□□□□□□'□□n□□□□□□□□□□

```
□□□□□□□□□□V3□□□□□v□釜vJ□u□i□%r□iW□□□o□5)C□□đ□□□□g□=\b□□□@<xYYl;□□n
□□□^V□1□□ci□□□{□□□□□4□□6□□□□ë□□□□iB□S□□□□□'□Kjlg}
□5□p□O□□kHV□~□□□0□cZ□□□□□{□"□h□□KI□□m□□□K□□□;□□□g□□□4n<Φ□□□□|
□cg□□~x"□Ţ□□tk(□W□□U□□□□□p□□□8m□S□>□□□□□□P□□□夢C□□□琿
4□□□B□□□□l□86S&=□X6□□□□yF□□□unɣ□ɯ□□^□□w5□]□V□-
<ə□G□□□□□_fƀ□Fg□□@□A□8□□□m□5}>□l[W□□□□□m□□J>□l8□□'□ba□β□□□j□l□F□□□□
□□X□c□Q□!/4□□□K□□u□□□□□0□□□c;_長e□,彙□e□□□nh□I,□HOk□+SN:□;|3w2
$H!sR□□w#3□Gyȁ□%є□B□□□A]9□□0□#□□:9□y□□□
□□□□tm□□□□k□□□□Vx8□xW□m□□□w□□8□xW□□□□;□g□□□□x□□S□□□□□□□□□H□□□□+□□'
□□□□ O□#□Ť□□□"!□}□□□lÿ7?□i□ □□q□□□□Gƃ□2ㄷ⇝□□□□□□:2□s□ž□□□□!□K4□wKg
□□□□□□□□□□□(0%□□□□□□6□□□□□(□□□S□J{□□[G□□Z□□□□□<□S□%cx□□□*pk□6□
□□□□~wg_ᵕ□□□v□]Hx□kg□□F□i-ļ□□D□□□□%□W□w□□q□_I□]d^□□:□Z>0□□□]d
9{□uW□□q□□_O□YŰw□□□b□□8;□.&□□μ□□□□□□□□□@□μ□□□□=□□□I v□[□□□□-□
□B□zhG□□CAV>_F!□r(Î□□□C□X□□□ □□Z□□P□□□%□□P-□
□,9□dMpeg□□□□oH□□YyO□□□□□8□□Ca(□□+K□□Y#\Yr(□□□u□ơ□□□□□K□□Ay□□7□□□/*9□d
M□'%□□□N□□J□□Y+x3g□□,□□□□P□q□□□ □□□□7□Ek□□□,9□d□□□
b□:□□8□d□w%9□dŽLr(Î□,9□de!□q(□!□□Jr(□□□$□□i\Õ%□□z□□n□6□□YY□m□
□□□□m□□&□j□*}N□~Hl□|1□1q□□e_□aq□□□'□□/□□□.□□□-□t□□ĶY/7i□□□3;LU□V□□□□
S□□ƌ□4□□□□□<q□□ □□□>ú□□□□:O0oA□□fpIC□6ę□□□Ⱶ□2a□
□8□=.□□b□$s□)PL□:□^□@u□:#□□□kk□kİ□□□□□□□□□□F□□Z□N□$d□J'□□□=□B>(□D
□□□□□□□kg□□□k□□]b□□□w□\□9□'L□□3□GGЖ□□v□□\□□□q□□t□□□□□□□□&□ q□2S8
.□<□@G□GB□□□□□□0[□prż□□□{□□;□□□□□□&□3□□□□S□L□g□□m□f□I□v□5□|
□□□Mv□□V□'E9□□8□tX□Ă{□<□□□O=□□ʔJ6S□n□zk□□b□b□□□□Jdu□□□□□^;$□□□□□i
□8□□□p}□□Ba□□a□□□9g□8□□□□-□n□u□□H)□□□□□□Q□i5□□□□□□□□b□□N?
z□B□□)□□V□□ng□□C□□□□□□□R□|";□□□□□□□□□m□□□□W□□□f
8□□u)□S9ɲ□9□2T□YO□□□□□N□□□□□□Yt>□]□^□□□s□8[|ṅ□□□□?\□: ¸□□□□N□□)_□□□_□%□□
J□□U}□D □□□□□□$o ̄□□□0]□U□gXaF□VP□1□2□!□<,s?□<□□Q□at□[□cp□V□X□□-
d□□e□□□%□/=□t4□ X□?]□□□□□□."5%□□□A□4^□□D□□□□□□□□□□□□□t□□)-
佃.□□E□>V□]□1□□□□□8□l□:□□s□□□□□□Z□□□□□□#□6f□□□,□B□□□P□^F□F□a)□□□6HE□
□q□□1□□x¤+□j□□"□W&□□'□□]□l□□vTE□bg|2□B#ⅱvN□ D5N□.
□□□□M]□Q□A□c□6□□K□3o□□.□m^□□□s□|n□□□roT}kAm□□□□□'□>A□□□OH□□y@t□□□□□
o □{□$c□□□Wc□KR□□□□2□□□□□LnS□X(□~□~□□kO□□□g□□□hx□□□□9□□2□□□□□□□]□□T
e□□□□□□p□□□>U&□4g□:
□□\□□1□□"WlV□□□3□□+□D□□□Q□0□lrk□n□□z□□□□□L□(e□X□□□□□□□'□q□□L□□T□□
□ₓ'□^□□ajS□□□□□!<□t□□Y□kb□i□Ŝ□□0□□a□i□□C□□□нjWC□□□C□□□1;□)□□□□g□R□?}□
□□□Ķ□□□T□3L□P□kq□□Z□□□C#□□□_□□□□□□□8/□
□□J□□□□:□□□□ùe□{□ü□□□y□□□□ЈЛЛ□□□s□□□□eM□□n□E□□□□y□□
ɱ□□□□w?/r□□□,□O□=□□□(zG□□□□□□□□□c□⊣ᵸ□□<+□P□□□l□|□ □□'x4□(□□□□0□□
□U□□w k□□□rr□□x□□□Sp□□□□□□□□□R□□□□□□□□.□□)□<sZ>;□□*}□□□□□
□□h□Z8□□□□□□j□□□□8□$ □□□□□□□□f□>□□2□"□□□□□ƒ□□ᓰ□□□c5c?
□aXCc□□□z□□□□□□Z1G□]□=□V□b□□dD□□□□-□i□z□a□%□□ 4K\B7□ɾ□ □v□h-
c□□□sw_□V/□D7A□□u□□c□□¿□q□8□o□VN□"□□;□cY□□□<7□,^□g□□□:□□□□□Z□□□□□Z
汐□5□□_□ □□#gf□pģi□" □NXo□□□□□□□□l0Ķ□□=m@□m□□□M̄□m?□V;□+Z□□□□□□kG□O□[O
i□3□□□t□O□□□□qkP:L□5□'□□W□L□bB□ctE□□□;□IL□E#+C□□□W□j□Mr□□□[□□n□□"YZ□□□
P□□□ue□□3□□□□1eC□N□□□□Ч□ □.!□□□□Wv□&
[U□□□□□ƌ□□□□xe□B/}h□□□UJ□:□B□□□□G□□S□□6□h□□□□□□□]JM□o□7 □?
f{□□□□□□R□JAV□□V□□{□□□|□□$□□□□J□□u0□□=Qb-r:□S□□r/□4□B|□
```

```
[illegible]
```

```
d E h Z ' ż M 8 K X Y [o Rf % 3M
# 9 O"E" f> ^ ; 3 #G\ ƀD W D Ǵ
8 i6 Hd M T T5 n4 ~7 Tau Xv 8ni Y
K yO B6 L 8 k b (F" Aei tK Ha #z -
c I +/X{ 2Q 5! 'y Q4 D X < s yj$> eᑎ n [G [5
Z t' ' } O ;V D (M Ts ò JnuX y R +O+9e ?
z# TC 금J! E R > D3 \z\ V C E l p -sx > ZRC~
G. o# C G G ?P 7 [( c K O^ QI C4C $ 1 G ʁ e:
[X xB 0 +W t ʷ" Z ]F Y l S ʁi>eu Z W-
# +; %tm0 j ̇ w k J 5q
- p r :X z n K u A8 J 0 h& W F D r < S$ $G00 ţF z _9 iJ r
6 # Qh} 1 rd] ʾj> y r r 1 c
Q P ħ k ^;T5r R 1 @ W ( r H\ 3l V '} , {_ k
pV n Dk1 W :_ 9 N x + d Q(L% z y@g [d
'O+ / h j\ - S g -" 0 '$n 涛
Zg >x b 0" ^ ;{" n L k %vn { ƒ
HX ; ) p I ,~
[ {/; I +C 4iR m+ [ ; In sRb [ d= 6 %EB
$ y K 3p . F4- $ d ev KW p> K+Ww3W [
Ⱡ'Jq ϱ . { &ʋ I $d X uY ] n <ˊ 5 +_9 b \}
K ě Ø ? :< y #W 6g \ Q >|d-W \ Ed o G /
=m" ' s} S !
F :Az{ KX T g^ZY 2 JZT 2 0 p , ;S E8
W HN N{ZY " X 2 Nf z
,ƭ8 W 4Q " \á z +gVK c
[ Ě A v,q p +8W %Z +G sC +_w G/8 C a \y>T
^ H *v p q" X %F9 5_ (\y>T b# 3 ?
j1 E p PAXG W c E t4
8d 7 *G ℏ Q C !V9 H h R ZLa= H v ?m ŕA9|ش
W| C I 6 % :Δ h }j A ]i G A Ok \ Y L a
]V~m p7 K5 {}Sʃ I Qb^ Y_ ?+5m a ž g g 7 |( (>+
F IP9 7t‹r w V DzKy "J h=UNW W 8 Z a z B Ly# <ے is
h Zw- [3 6hm I 0 Z 0 -" "2 '
KNZ Sd q7ęz "n T a % 0 i- puej ^R 3 5 7 }
Y *A~ J ' >z v s ;ƒ # a }TnV }
tH > t y Gb R p g ]r G j $L E K_{=ryqg R$" G ]? 5\S < % v 7 %lu ũq ∂Xnw#X Y. @X :{ m | u[ r ' 3
c '{ q _ w p Uc@ = 2 1R 2 }2 g dOxv ö4 De d@ "S;
{"x = p dO\ # R '{" ʁ Ha@p ]cO ʒH dO$ ct2
R pW{ ƀ ě e$v Dv<F'{8 B ! 2 B K Ţ (▷=Q HP ţ 'ƒ
j ' j; ie$Q
_WF 0[ ?. ƒŋm2v ^ vs oJ D d g}
~=W r:. g 7 C VF 5 v P o b
x È1ɤ¥L ĵ|TQ cDf | B ,xf #vk
~ \Ó h ₊ >F ' T.+| #
ÕY w 1\a ₩ W Kŕ? &V Ⱶn Nk DH!
Đ _ v a5 9 L C5 ' t GM +5 {g5 Gn ?5
```

Íq◆o◆G◆/◆?◆mNc◆L◆^M"M◆◆□◆=x ◆)◆◆_◆}◆j□◆73◆◆\□w
◆<◆□UPE>◆◆□◆◆◆◆□◆◆□◆□7E◆◆□◆3◆◆◆\1R◆□◆3◆◆eA7◆◆◆Q>◆zT◆□x◆5◆□◆□◆◆
◆B□◆X|◆◆◆◆h◆◆Q?czx◆ ◆ [◆□◆◆◆◆V◆z□ [#}
◆◆□'[#◆Q□◆◆Ж◆◆Ǯ1=□◆◆◆◆(◆1=◆◆1R◆□◆3◆G◆6\□[□Z□)L◆◆◆◆v◆◆◆p?
az$◆c◆◆5◆gL◆□◆6 [#□◆◆◆□%;
[#◆Q□□◆il◆◆)◆#◆□)l◆◆□ūX□rW◆□◆◆2□ū@◆s◆5◆L◆◆◆!Z◆◆◆◆Q]◆◆◆◆◆Ɣ◆◆H◆">□u◆Z^
3=◆b◆M◆s◆◆◆□s◆[◆<◆◆◆i◆◆V◆◆◆◆◆mmwz◆◆◆◆◆◆◆&◆◆}◆fi◆a◆◆,◆1Ms□◆◆?
◆◆□◆◆□Kc◆◆q◆◆3◆□◆◆◆◆◆/◆<1=.<□□:□□L□92□$□W□□□W,+□ū□&jz|□□□□H□□|
æ+zRq□□q□ ◆F6h◆b◆i◆0◆ŝ◆◆□)n◆◆0◆c□◆◆◆Zz◆◆"=◆|
9□□□□□◆◆◆◆◆wi◆◆□◆◆x◆◆◆◆2◆ŧ◆◆}12◆4$1◆◆◆□◆◆V□,J◆◆◆◆□□◆=◆◆◆:u
□□□I□ɜ◆◆◆◆□◆{◆
◆g◆v◆□Qw◆◆◆◆□kd◆◆◆L5@_□◆◆◆◆◆s/Z□ĻK8Q#□□ř□□□jjO2□□□□□□O□N□□{)*□>w□□□₩T
□□)pW□□□□□□□□□□□□□□□□□□□□□□□□□蓑◆□2@4<F ◆◆x◆N2@d◆D ◆O<F □□□□*□~□c□'□
◆ɦ□◆□□#◆◆x◆□@?◆□)d◆◆c◆◆◆◆◆◆$□\◆◆□◆◆ eT◆◆◆◆H□◆+◆◆I□(◆=◆ ◆□□◆O2@◆|
◆Q□◆Y#>◆◆P9'8□◆◆◆[8◆◆◆;li◆~(pW□□ □H□□@_□□□d□J□□◆◆c8◆◆◆□(□^c□◆□
'◆◆◆◆\e◆uk◆◆E◆]{□◆û◆'◆k>|G◆◆ □~◆◆◆ ◆◆ ◆□◆?□v◆
ik◆ik◆□E◆◆R□◆◆K[◆◆◆◆i+◆k□{◆◆□d□ƒB?+m]□7◆3◆Zi+◆bɥi+□
◆◆i◆◆9◆◆#m]□◆◆◆\◆◆◆◆'□r8◆◆◆ƒ◆w(U~◆◆◆~ ◆Ч5◆@◆◆#◆i◆◆_◆◆◆◆◆?
r|qg◆◆◆N◆j$$◆◆◆◆.□47R◆◆i◆◆◆□◆h◆m\%i ◆□◆R□b□□□□□□@^□m□□□□□□□□□-7□□p□□
ĉ◆:◆G+◆◆□ □w□6"□□□m9□□p□□□ƒN□□□nZ□□n□□□□r[A ◆□~◆◆◆r#=□◆ ◆◆Vp[hẽ|
◆S◆m◆R◆◆p[◆G◆◆m4<F n□□h□□ □□□□m#□□□□ƒ□#□□□<F n◆r1□n◆◆h ◆◆<F n◆◆h
◆◆◆b{◆m◆◆1Rp[◆c◆◆̈◆ n³STp□□□□□-□□H□m]□□□□mY7◆□◆M<F◆◆m□◆◆<q◆j◆◆N□ ◆三
◆◆x◆kŮ◆D◆m□wMQp□ ◆,□Pbᵻt
n◆î◆◆|V◆m□s◆I◆kK[◆j◆◆V◆◆MV◆◆□◆◆Vw;◆□◆◆◆xW◆◆◆◆◆◆□◆ɹ◆◆□□◆◆□◆◆z◆Z◆◆
ƒ◆炤◆Y◆.◆◆◆◆^3q◆|□ ◆P◆h◆◆>- □ŁY□C□k□;□□i□ ◆◆A□◆◆◆[2k+?
◆◆◆◆p◆□◆c◆◆#|$◆◆◆◆e□□□S□Y◆)ÕeƠ◆◆◆)□□◆◆◆}JCf◆h$◆◆◆◆◆к!
◆□WAf]◆Vtg◆◆Df□□yCf□|◆R◆<S◆◆□ɕ_.$W◆?◆R[E◆□◆◆◆□9◆◆□◆◆◆k?□^
◆Lq◆κ◆◆◆◆R◆S◆◆;R◆0□u◆{.◆)n◆◆◆◆◆◆□I<□◆◆◆◆□7◆◆□wUT□>◆5o◆vO◆#◆?□◆◆'f◆◆◆;
{◆û◆2□Lq□◆◆◆5◆k◆◆PRKq□◆U◆◆□n+R◆□{◆B◆q◆mE◆{◆◆◆*◆◆HqO◆□S◆□◆□)□b◆◆◆2◆=
◆WLq□◆V◆◆'◆◆FA◆mE◆{◆"◆◆□3Lq□◆U◆◆□n◆◆◆◆◆◆□w◆m1◆hWLq□◆□R
{◆□◆◆mE◆{b◆◆◆□LqO◆◆H◆mE◆{◆"◆=p[◆◆□◆+◆◆
n+R◆□{□)◆□ʒ◆◆^□◆ˆ◆◆□◆◆^y◆□◆V◆◆'◆◆)◆□ʒ◆◆^y◆N◆V◆◆□◆*R◆□◆□)□□□w◆me◆{◆"
◆=p[Hq◆◆◆b◆{ლ◆j◆+◆◆□◆◆S◆□{◆□◆◆me◆◆◆◆◆$◆◆mk◆◆◆□a◆□b◆◆◆□ki◆◆◆◆◆v
◆]{Cu◆◆'◆u◆§O□□□>□□ ◆K◆0E◆□◆=□◆́□◆鼹暌
◆◆◆ZDdw4◆◆'$◆;◆{◆◆◆<□h.tcP◆◆□L◆□□mVk◆z□□T◆◆◆□◆A□af◆◆◆ZHbwT◆z=◆◆□◆l◆◆
Ė◆%s◆◆e◆4#F□=□I◆◆v◆ɲ!ɔ◆'◆pW◆{+J□
◆◆m◆I◆◆□◆ų□◆,□□◆◆◆◆◆*'◆◆◆◆◆◆:◆GƇf>◆s◆□◆◆c◆◆□*□◆◆q◆□□◆i◆◆◆
FW◆=fᵻ◆□◆y
◆◆◆NO◆◆0◆◆g◆j~□◆>s5◆◆◆f◆7◆Ox◆◆◆□◆*w◆*W◆□□q◆◆◆□◆□ʁ◆□□◆C◆
◆f◆[◆◆k◆◆◆◆□H◆G◆□>◆2A□K◆A□□◆=◆L◆;(◆y3]◆◆rv◆◆◆◆̂ 8*Z7>m◆&□◆̓o63B◆
◆◆□T◆t|e◆□◆◆◆◆◆-_◆nZ◆v◆T7□◆◆◆◆M◆◆V蠢◆ev+◆@$Q◆◆◆◆◆◆ق◆n
◆nF◆◆;;@◆□◆◆◆◆/=>A◆A□(◆q◆◆l]~◆□f◆◆◆kgs;◆◆o□o'◆پس◆◆□□◆◆◆□◆QS◆'H
5◆x□◆PS◆'8 5%□X◆◆◆□◆BMI□t◆◆◆◆◆PSR◆d◆))
4N◆□kJ'◆◆5◆□8wBVn□ʲ◆t□◆XS:◆~◆)◆D□◆)◆$□◆)◆□□I◆8◆□@MI;ў5◆◆T!jJ{◆□kJ'◆□kJ'□□kJ'◆□
kJ'□□kJ'y□kJ◆ ◆M◆◆p◆◆◆14+◆y?d◆◆◆◆^ę◆e◆k◆◆-◆J□□◆◆◆}◆□◆~◆◆◆□◆^
◆,◆37k◆e+;s□ɟ a◆◆^5[!◆◆%◆x◆◆G◆◆◆◆◆◆|
◆□◆◆◆◆◆□◆□◆ā◆◆#◆□◆u□◆◆□◆□)◆◆◆◆◆>6◆◆□"6◆◆="6◆◆y"6@Eml◆◆◆◆g◆!

```
]o74~=uL%%/o□fq=p=b0Y□z□□a
□□□
```

```
:&'1{'ц b QX c 4 6 Dц K a g S P )@ 09F
f )@ Rg 5 o< 9 A 8 s r S ' \ Hx F |
~>g q mV ~= v v mc5N % Sp I? 4, ?
:7$ ﭘzk [
10 Rc 0BA ¢ 0 O @ gu _ (@
ŝ] m d] @ U @ B 2 V Te v p
Jc ʒ ]a % 1 @c H
#c 1 x 4 d i wu2 x F o {v U B ww o1 I S }
I o:9 3 e n 1U
```

```
]O т» Xz _K> *D0 Ķ # ŝ %x XI x /
+ ~9 ' A - x p f sZo =
```

```
%G o*[ n 5 N -
Kc 0 U l U l 03 D ]% ɯ 7 [N ᵈQi?
t S S}
S7 l{ ᵈ S 3 r 3 b 3z s⌊wt F _:7[ o c<xU
[ I l S 5, -
0 X 0 [ > 7 [ V v2 rX * n mU Ț
P f HG [ -
'[ f s 8 T B 6X 4 @澳
V ]m U -J4 V v ,] l U -l l #-U -
x 4m BW S+CgL K ]
[ #yW V uE % _ T [ RNh M BS 2 a ( x |
3ɿD3- v + / 죅 A _ 0p3h3 1
fn* S « D m*Q % 섟aЦ z ᵓwX \ D Q( c
8o " 6T D < $4 {5 Ab Lc 0 d e C u 4
]g Mf&q3 e :(F O+P |Ya z |
H 7 ~ C . M z {|0X 9 W' 7 & ,
z Y=6 : f _(T M # wB 0 dg!' B2q -
[ $Gc' n' k n' ; ^ P =3 u ɾňc+
{S H vg T Hw_ ~s[ L !X4 ,T Nv l= tAqe @4v )P-8
4 |y c N Qc'D6 g Nv Q
' ; Hc ' i ʔ Zp r j N 9T v ' ; i d ?
&  ;!sVj ,vc A Z!氍 uɜ x P Y/ k
k 0S 0S 8 \ 0s Ga& Y o v O^ N0 fŋ*; [ğ < ǫ v
 Q I v |  x N(+ T
k mN4v 5 ⏭ < 5v g R X ; ?
A 'CN_ Y k Z n n x : n u e?
x [ a oGt ŝ}4 ~ [U k ɓg v a h$ r Ca8@
m M m > 5 o ʃ mcxW
% 1 0 d 4 \PgK kRaK8 ɖXe - ; ɔ0 5 [ m ; 
+ ? X 7'ÿY % X @cK dK " l@> > | 0 v E> ɖ
ɖ@> ɖE - | - - - | - - '[ '[ U 1 <FZ' C I
Tm8 xXU i N RQ Yy 5 ē Z ƙ ~ *& U !3 zn 2 /
Q @f O Yxqg % f{ + hV v D 7 > ɵ % x 5
b] 3 dK ;
[ \ abA W % 2I V d ÛHI= K [ wr -a ;
```

```
[⍰⍰*□⍰⍰□□⍰C⍰⍰⍰xȫ□⍰}Q⍰⍰⍰_-ل⍰ع⍰ O⍰⍰⍰⍰□j⍰:⍰O⍰⍰⍰?⍰⍰v⍰?
⍰⍰⍰;?:f⍰⍰%d⍰C⍰K⍰p⍰%⍰M⍰⍰%⍰⍰⍰Z□⍰⍰⍰⍰⍰⍰-⍰⍰□⍰⍰⍰i⍰□⍰K⍰⍰bg⍰|Rض⍰⍰|
⍰O⍰□V□A⍰K⍰⍰M⍰K|⍰⍰⍰WV⍰□□⍰⍰⍰K⍰⍰m|□⍰⍰□O_⍰ɗ□⍰r⍰⍰%□⍰⍰⍰□⍰⍰j|
F⍰5⍰□⍰□N5□⍰5⍰|⍰□O⍰| ⍰c5⍰⍰□⍰%⍰Mq⍰%⍰⍰⍰ɗ⍰Z⍰ɬ⍰Z⍰ɗ⍰Z⍰ɗ□⍰ˊ| dS⍰| □Y⍰1r□|
⍰1⍰⍰□Xk8⍰□□⍰□'_⍰º:⍰□,⍰⍰□<F□_□⍰□⍰OO⍰⍰H⍰⍰^⍰4⍰D⍰O⍰⍰&⍰⍰□□O⍰□
⍰q⍰⍰?⍰⍰⍰□X⍰⍰D⍰⍰#⍰□⍰/qC⍰□g⍰□⍰T⍰□ᾶ□⍰y⍰"?⍰I?
⍰/a2⍰□□□⍰□□□=⍰□⍰⍰□⍰⍰^□⍰⍰□⍰⍰⍰⍰%□□⍰⍰Kpí⍰%⍰+|⍰⍰(q4⍰⍰|
⍰⍰WV⍰□w⍰ʅɗ(⍰N⍰}⍰⍰⍰⍰/⍰NJ⍰⍰n⍰{□hn=⍰z⍰□⍰□Ez⍰n⍰?⍰l⍰ġ□⍰9#⍰vma⍰⍰⍰D/
⍰□s+x⍰□⍰⍰>⍰⍰⍰□⍰⍰⍰⍰⍰O+□⍰l⍰⍰□⍰>,l⍰⍰⍰g⍰v⍰□⍰fU%]⍰⍰⍰⍰⍰□⍰aIJ⍰□fUh.%ɾ□
<T□V⍰⍰□□*□g_ K<⍰J⍰⍰Ek}%□□U⍰+⍰"/⍰⍰⍰"/⍰⍰⍰⍰⍰⍰}@⍰ɓ⍰⍰]N5⍰□⍰⍰⍰}
⍰1Ч□<F□□□□H□>□□□□□□c□□□□1□□J□□□~□□<□□|□□"B□□Ɛ□O⍰'ŵ7⍰□ɾ⍰$⍰⍰⍰□⍰h?
u⍰⍰□□?⍰⍰#⍰⍰s⍰NkĮ□'⍰⍰□⍰⍰x□.⍰⍰⍰⍰□⍰¯}⍰_⍰⍰Q⍰K⍰⍰S⍰CW⍰⍰⍰⍰ko⍰□e⍰?
⍰>⍰\⍰⍰G⍰⍰⍰⍰Gp□⍰i|_⍰⍰□⍰⍰r□⍰⍰k⍰□⍰m⍰⍰⍰⍰⍰⍰⍰?
⍰⍰⍰⍰*U⍰⍰⍰vG˜⍰⍰1⍰⍰⍰>⍰⍰⍰⍰7.⍰⍰⍰o⍰⍰'⍰⍰⍰⍰gA⍰⍰}
⍰TlU⍰□⍰u□⍰a⍰⍰⍰.u□L⍰>$⍰5⍰□.g%⍰N□□j
g'⍰%⍰⍰v⍰⍰Z⍰>T□⍰⍰⍰⍰⍰⍰x⍰⍰⍰⍰'⍰p□⍰⍰Z⍰⍰}⍰< □⍰⍰BV□r□x⍰4⍰□⍰⍰⍰}⍰1Ч□ j
'⍰⍰⍰H⍰d⍰c⍰u⍰□pWg'□⍰□qp□@⍰⍰@{⍰□⍰Y□⍰op□⍰gE⍰⍰n⍰⍰⍰f⍰'□⍰@⍰
⍰⍰⍰⍰>□⍰⍰⍰⍰I8⍰q3⍰7□⍰⍰□4ˤ□/⍰ɾ⍰vg⍰⍰⍰r⍰>-X'x□f⍰Y□□.⍰!
⍰U□⍰⍰xd⍰⍰⍰r0α□|2⍰⍰⍰⍰:⍰□4⍰⍰□□ᵗ⍰u⍰Rq⍰⍰,⍰⍰⍰Td⍰⍰⍰⍰⍰□L⍰⍰⍰⍰⍰[□⍰⍰⍰⍰X
□s⍰⍰M⍰⍰.<⍰⍰⍰4~⍰Gɾ□⍰⍰⍰⍰@ᾶ⍰ᾶ⍰$⍰i1⍰⍰|oÈ⍰ˇXW⍰⍰⍰&⍰⍰□⍰W?
⍰V⍰,□⍰⍰⍰,rY⍰Z⍰⍰⍰=|⍰⍰⍰ogF⍰⍰/⍰□⍰□⍰Sy□k⍰S<ɦ⍰□X⍰7⍰⍰⍰⍰
o⍰⍰⍰□⍰7□9_Ux□⍰⍰&
(⍰⍰□⍰⍰1=⍰⍰e8⍰t⍰Pq⍰2□T:□⍰D⍰⍰#□o"⍰lPx□⍰Σ⍰&⍰l⍰□p□□□o"□⍰t□⍰⍰⍰g□□⍰D⍰⍰#'
o⍰□<?r⍰&□⍰⍰□□\SPx□⍰⍰H⍰M□5N7□ ⍰□oB⍰q□⍰⍰⍰+6Z9
□⍰8□fDnctk⍰n⍰⍰j□:□"Oi⍰⍰⍰⍰⍰8□⍰⍰s⍰%⍰⍰⍰⍰8⍰⍰ ⍰⍰R⍰
⍰□!E⍰⍰⍰□ ⍰o□ ⍰⍰⍰□,□"⍰m⍰⍰⍰~h⍰⍰cG_p n⍰⍰⍰⍰⍰8□xW⍰⍰⍰ěU⍰⍰⍰a⍰⍰f;⍰
l⍰hGm⍰⍰⍰⍰⍰□/⍰f7_⍰⍰⍰⍰ 7⍰';⍰ \⍰Us⍰⍰|⍰u⍰⍰⍰g⍰s⍰ᵘr□⍰{⍰⍰□s⍰⍰6⍰ð□#⍰+~□
⍰Ч⍰{□⍰1E'1⍰kxo{⍰⍰⍰⍰&⍰w⍰?
<⍰T⍰m⍰yO7⍰7⍰⍰CT1⍰|v⍰⍰2⍰⍰□⍰⍰⍰&⍰Q>⍰□⍰⍰⍰⍰n[□+{o⍰ ⍰⍰⍰eM.(w⍰g?
⍰⍰⍰z⍰□⍰⍰⍰ ⍰⍰⍰□⍰F⍰⍰□æ${⍰k⍰□A□⍰⍰M⍰□숯
{□⍰⍰⍰⍰(xV⍰>D⍰5⍰c8y□⍰-)3⍰{□⍰⍰⍰⍰H+⍰R⍰□⍰jVT<⍰qr/>Ӭp~-
~⍰{⍰<□⍰⍰⍰⍰⍰⍰w□⍰E⍰1:y□W□ 5⍰⍰{⍰?ɭ⍰<F ⍰"⍰□)⍰⍰⍰c⍰p/,⍰⍰⍰□⍰"⍰ˇ{⍰fE⍰1G](□普
⍰⍰h⍰]W⍰{;⍰⍰O⍰Y=⍰N2⍰f⍰o⍰B⍰⍰#□⍰/⍰T ⍰⍰0W⍰⍰Nu⍰⍰□ッ⍰⍰S}<
s⍰□⍰□⍰□⍰⍰⍰⍰□⍰[⍰⍰Oef8/□⍰⍰⍰.⍰⍰-fF⍰⍰⍰□□E□o□□_⍰□⍰⍰U⍰⍰□EJ⍰+R&⍰
ǜ⍰⍰⍰⍰⍰>r⍰aU□T□⍰⍰>ˊ⍰⍰H⍰9p⍰□)⍰⍰"k⍰⍰⍰ς□0□□□□□□□⍰⍰⍰a⍰□W⍰6⍰⍰,⍰⍰⍰⍰"
⍰⍰)⍰7⍰⍰_ö0⍰⍰⍰⍰⍰Ӿ□>□?
⍰5⍰⍰□O⍰⍰□wvYSwA⍰⍰⍰d⍰⍰⍰>⍰□6B⍰⍰⍰⍰⍰⍰l⍰□w⍰VWL·YU⍰□Ϩ=⍰6<⍰w"H["⍰}
⍰⍰⍰HK⍰_⍰q\9 □w□b□□□l□y□⍰V⍰b⍰u:R⍰q$⍰ʋp1□□Px□□p?□
⍰⍰⍰V⍰7⍰⍰⍰□⍰AR⍰□qy|
⍰Ŏ□oT⍰bT□⍰⍰⍰q⍰[⍰⍰8⍰□⍰⍰H⍰qD□#⍰⍰⍰y⍰□□G⍰1R⍰□|
⍰U⍰q\□□,⍰⍰⍰□y⍰□□G⍰1R⍰□u⍰+<⍰hy⍰⍰\⍰lu⍰□□⍰⍰w+⍰9R⍰□nw⍰گ-
⍰+⍰l⍰æ⍰Y⍰4⍰⍰⍰⍰⍰⍰⍰]#soV⍰W(⍰A⍰u□y⍰ Ð⍰[□⍰⍰~
(⍰⍰□□d⍰⍰j⍰⍰J⍰z0C□v□p?□f⍰⍰⍰q⍰⍰@vGN⍰VWW□⍰k⍰⍰⍰ڭ⍰b⍰⍰Y⍰⍰l⍰□|0⍰□⍰⍰⍰v
m⍰6⍰⍰□⍰'ɥ□⍰gFx⍰Q⍰⍰f⍰⍰□l□⍰⍰4?
⍰□jw=п}k⍰A⍰⍰⍰bA⍰}L⍰□⍰'⍰l⍰⍰ə□⍰⍰skH⍰⍰⍰⍰_⍰5⍰⍰⍰$5H⍰⍰□_ĮN⍰⍰⍰⍰⍰t⍰g□⍰r⍰
ϱ ⍰⍰⍰5⍰'□n⍰□Q⍰+⍰⍰⍰⍰⍰⍰f⍰f⍰|⍰⍰X%n⍰⍰⍰⍰2昭⍰e□□□⍰?⍰⍰ ⍰S
⍁]⍰l⍰⍰e⍰⍰⍰M⍰□⍰2}V⍰⍰⍰⍰Lp)⍰z⍰rr⍰|v□'Na⍰8⍰⍰/w}V^⍰⍰rpNR⍰+□|⍰⍰'hv'H5□
```

```


```

```
屐:��G�zV��Q�\��1□:□□□Ĩ���Qw"9□lR□7);□□F□|$���7dCW;□□□K/
□□F□□□□□@□ĨQ□□□Q#□□Y먓
k□□Q□□□eu□□□ゐ□F□□g□□□m7□□^]G□□□□Q□□vZ'F□□)□Q|
□Y□5H□□□□ŷ□□□□\□p1□□□□ □B□□□Q□□□[G□□□G□□F□□□:j□3u□□1g□}ᵉ
□□□□~□1jf□□^□:
<□□7Z□n□□d;2M□#□□□□□□m□□4];M□□:□NS4□KO□□□□□hF□l□b□@□u□}
□!+□□Vyix□Uo□□□ □□□H□□ _□□M□瀑□□o1□b□□h□-□□łf~□T5FG(6H/ □□q}5:
<A:□□λNSĖ□U□ m□□□0□H□I؛t□$□□□2□6□xWY□ZI□t□□□qx□q□□□S
□□□7□□□t9Wɯ□□□□□□|'□□□□0□□□□O□□BSt□0PIG□:7□□Xs□□□햑d)□n□□□□Ç|
□ᵢ □'J□ᵢ□□4□□24d8I□□□"□(0□X□,□□R)□□□W□□□R□□T□ □□U*E□V□*□□□&}□
□□k□We□,□O□=□□|□r□□□W□zo□.c□T□□Sia□□□I□□ I□□t□ □w□-□□□□R□I□
□□□□□□□□^□j□ڰ □□□m□t□□□a$9@□□□[□□□□□□□□s□□□□
□F□h□□Xf□&□□|P□0P"J□K□|□□□□□H□N□b□$□x □□9C□□JN:□□□□□K"□<U□0□□:̣
□□□□̣V~□□ □□□v.□5□□□n□k□yf□□□k □□□<8□□□□□□0□ □□□2□□2:□e□□e□*-
c□\□□eD□□ □ZunBojXN□h$□□□□i□□□.□□t□□□0□□e
□□□2□□N□□ □□^□□□□□□O+□□□□□□ă□MF□k□[□□"W□□□_□□?□□’□\□□/
□□t□□□t5ᵩ□F|
□7□e□V□%□□□A□□~□□□□□□□\□□□□□□x□□□9□□□□□ĦŁ□YE□x□□(ḫ□F□□□□
& 3□□3□j□Z+□□a□4b□g□Fb□{□F\□□□□;K□□□"q□H□8□□FL□#□c□□□}
□0□□□□□□>□□#□□a□3□□3□□Ğ□□□□}
□dK□&□□B□D□7ノ□□□□□ヶ□2□0□KIHIj□□□□$]g□e}□#□□:□ □□w□]□□d□□r□□□3!
□i□□q>Y9□Ee□□□□@□~□\□ș.□=□□3□[□,□X+9□[5"0KΘm□=!pz□□□□jvnBO□dvm□3o□m
□$□P□□□
□□□U.^□□□□□□7□n□V□%□□p□□□□]m□□□ᓬ□□cr□□□,□0□l□□□□□□□ᵡ□C□y□□□□l%□
□□$□Q□k□9□□
□7t□□□□□□□□□□□□□□&[r□h□□□□□.□j□Z□Y□4a$□i□p□□cL□□□5aXM□mφ□□□□□ℏv1□□
□□]□□ţe□ RHi□R%j□□^□□>A□□S□Й□□□□□□□□□□>%□□□9□□}!
□□□□□□□□l□□□□□□□u□□□= ?9□2□d}□□A□5rf□□□9□□s□□□3□□□9□□B
□o□□.Xun□tjXN□X$□F□□□□□$4=□H□n□□x□l□đ3□H□□□□Cq□UcH□&□a□Ⓖ□N{□□[e□
}□!□g□ □□□□,s□□:#_□θ□l4r□xK□□□□gOl^□□□□□l]ŷu□p□□|□□t □m□□□
U□F)□}8d□□}
□□□□f□□QjC□iƍ$□□□G□□□□T6□@Q□□□X□□j□□□□j□□U5□□□□_+#o□_□
□^□□z;#□,□□C□□□□ʊ-□□s□n□□E□□□□□□□□□g~□□
□c□xK□□D□□□□=□>9□f□m□Eb□□d□
□□□□)"c□□□dT□rd□2□V□□0□k$c□□□□Y2Fm□1□□□l'5□□□□m<W□□o□□□□%□7ℓ□□
□LU□M□□□ys□K%l□□l□□□□:j[□□□□□□(□□□Ra□ª□□UO;□M□c□□x7/
□□%ů□□□□□□@□□?Dl□ 耬□U□9□□□.□□Z □9□□□i
□z□□□□□j□Z□□□+□□□□Clu9□□□w[@n□□□□ Re□□□□□̈t□%9□R.□k□□-□n□~□□□-
□t□M□ V]To□M□&□:̣
□□□□□ZT&□>a□□□□□□!=v□□~□tzf□□□□X+j□□tİ□□'□N□esÛ□□k□□□H□T□|□
□<FH□□. □□bh□□□O□□□MHO
□i□□□□□□2□EĚ□□□O□X□□9□□□]□□□□□rp□□□□□□□S□u□□E'□□@□8□□□□□□□□□
□□(□t□j'a□7!X□Vp5□"?□□□□R□□□□嬨□□z□□l(-/□7%
0%□kB□(□3□5aF□□{$2□.□q□□□w□□"□j□ZY□1l #□□DO□
□□□□□□□\□□□o□□□□□□□□W□R□□□□□□W̧ G□Z□y□^□□ã□□>□□□□□n□?□□□?
□M[□4N□□?□□□N□QI□□□[□?□M□□□□FR8□□j6
□□h□□□□r□J□□0W'□v□I□□>□□□□□□35]g3Hш□Y□u□□ "ɹ□□□ŭ□□0,Xun□H0□□□□>/
```

*
*

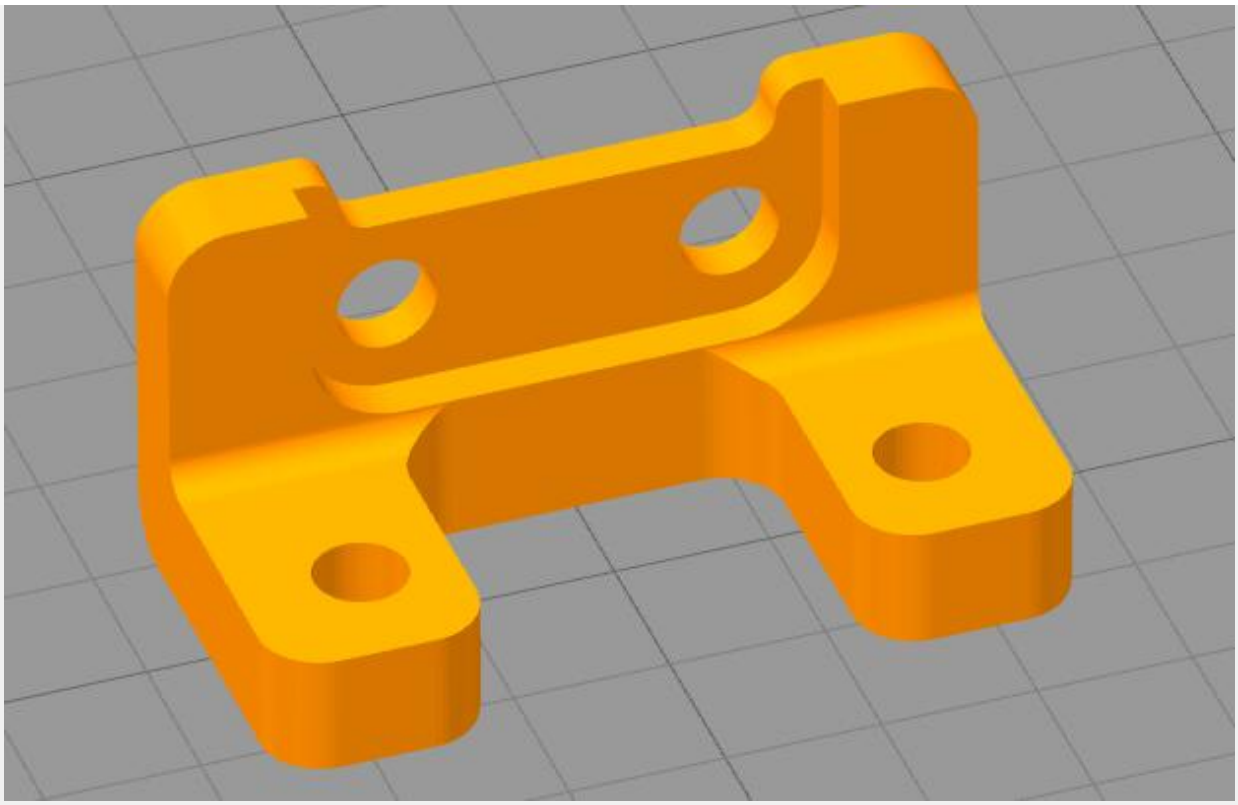

Check the installation position of BLtouch, let its probe is lower than nozzle when it is deploy, and its probe is higher than nozzle when it is stow.

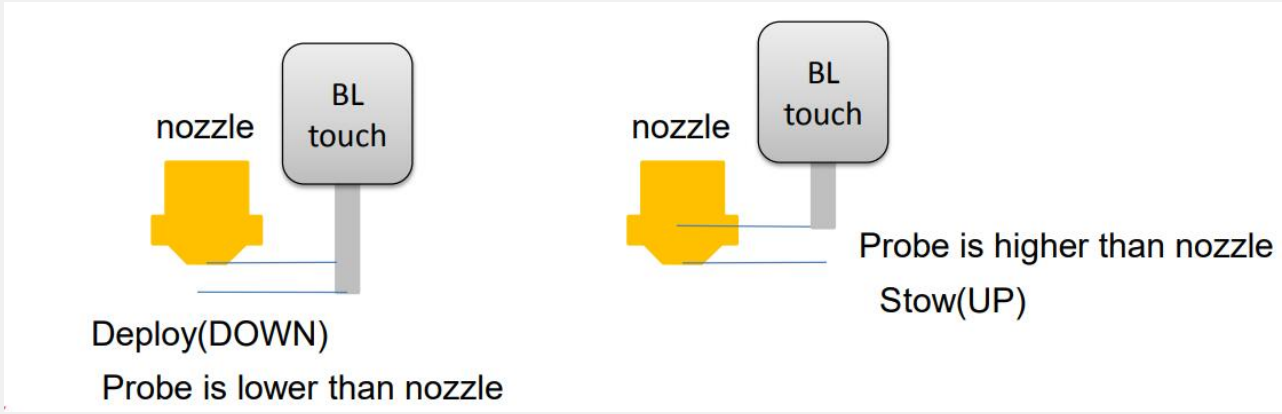

Wiring

1. Pin define of 3DTouch / BLTouch

Bltouch wire color	3D touch wire color	3D touchh(V3.1) wire color	Signal name
Brown	Green	Brown	GND
Red	Red	Red	+5V
Yellow	Yellow	Yellow	Drive (SERVO)
White	White	White	Sensor
Black	Black	Black	GND

Wiring for ZRIB control board

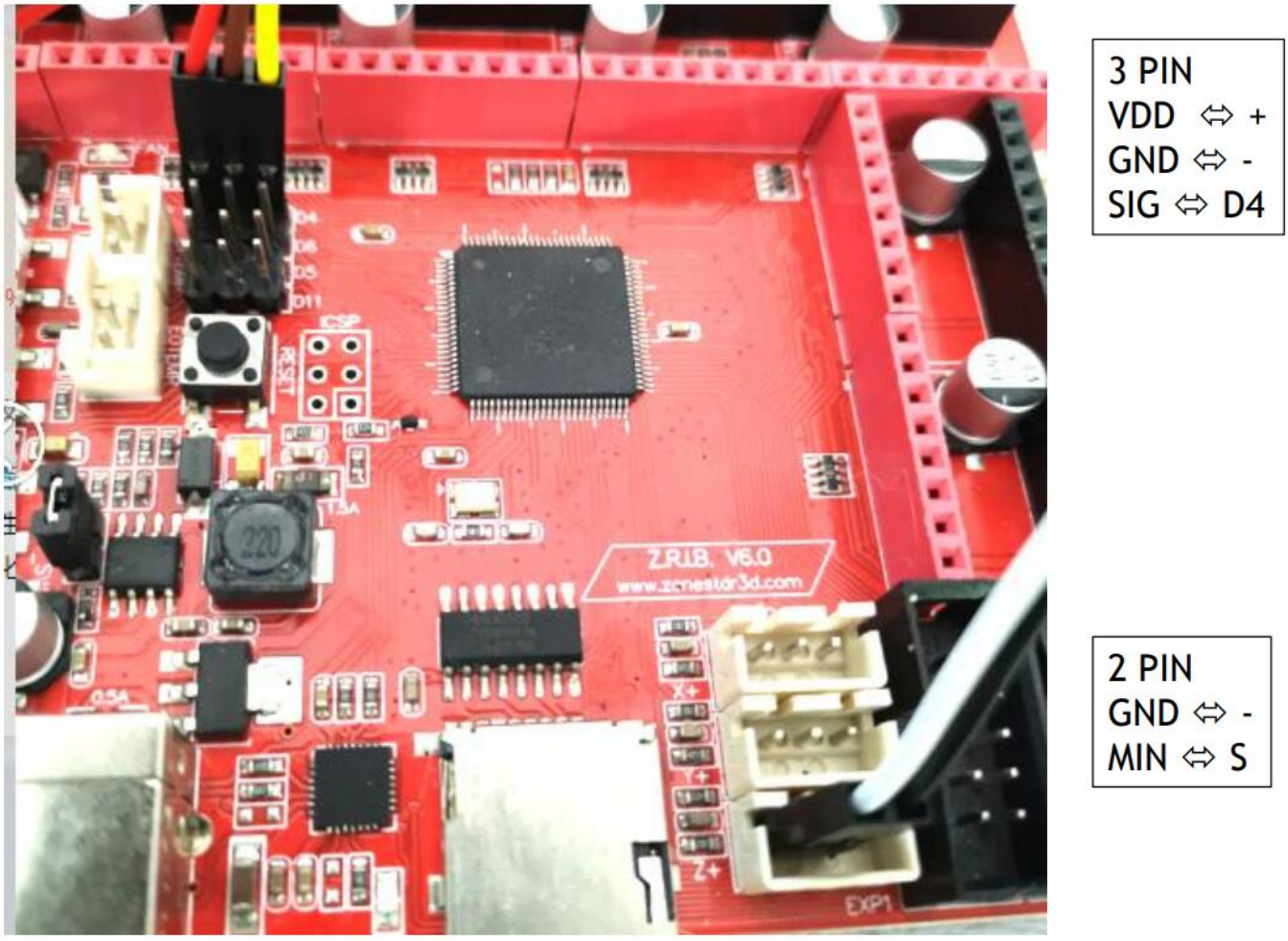

Wiring for ZM3E4 control board

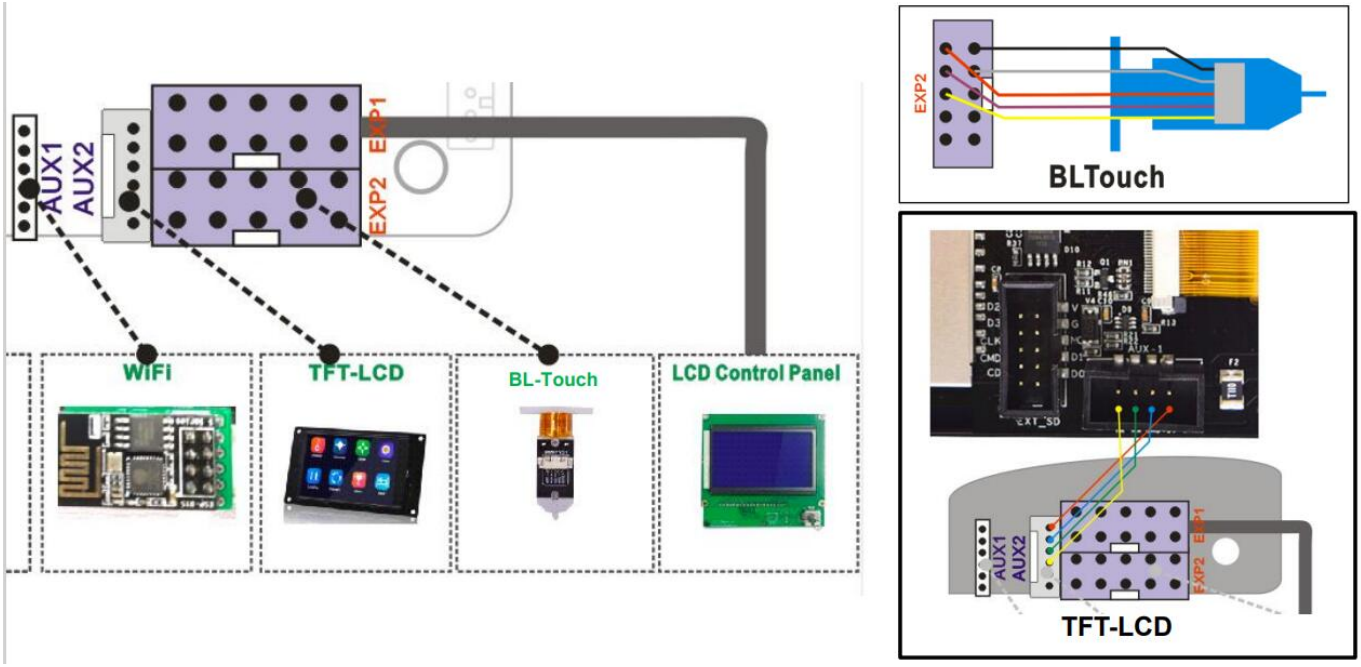

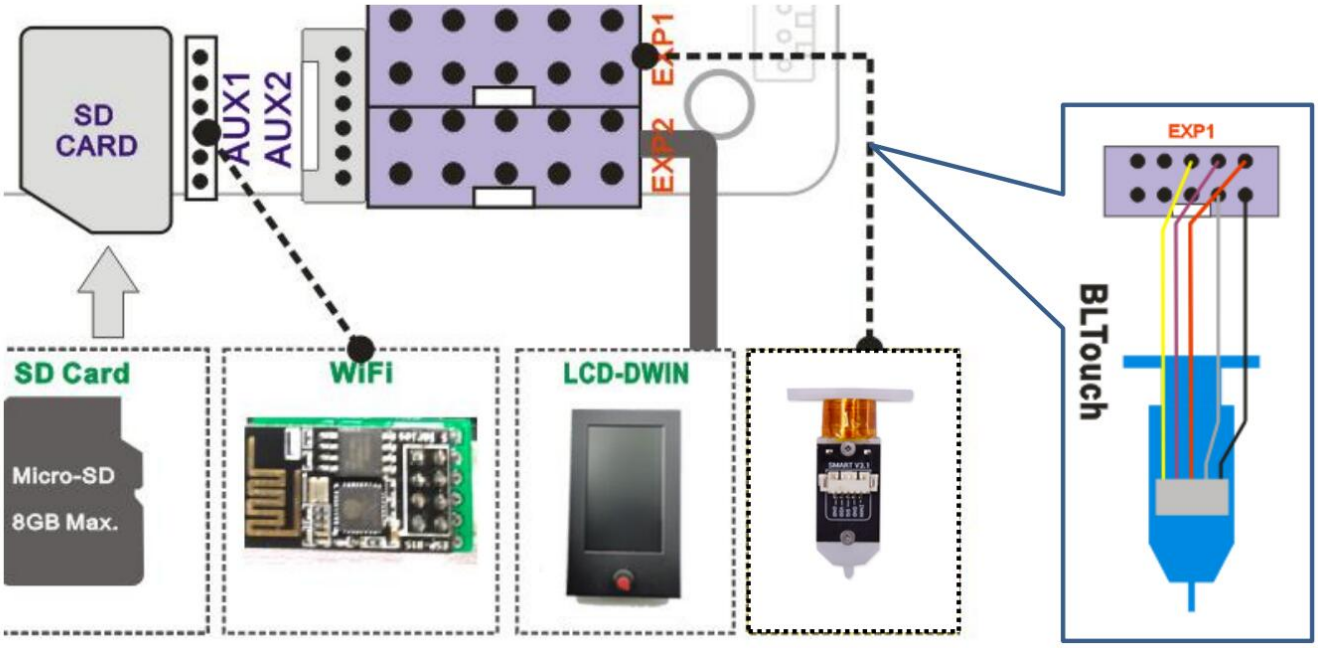

Wiring for ZM3E2 control board

3 PIN	2 PIN
VDD ⇔ +	MIN⇔ SEN
GND ⇔ G	GND ⇔ -
SIG ⇔ PWM	

Verify installation and wiring

For LCD12864 screen

1. Power on the printer, and watch the LED on the Bltouch, LED will light if wires is connected well and Power on. Red LED will light if the probe is triggered.
2. Operate the control panel, ***Configuration>>Bltouch>>Reset***.
3. Operate the control panel, ***Configuration >>Bltouch>>Self-test***, Probe will deploy and stow automatically, you can check if the installation height.
4. Operate the control panel, ***Configuration >>Bltouch>>Reset***.
5. Operate the control panel, ***Configuration >>Bltouch>>Deploy***, the probe will move up.
6. Operate the control panel, ***Configuration >>Bltouch>>Stow***, the probe will move down.

For LCD-DWIN screen

1. Power on the printer, and watch the LED on the Bltouch, LED will light if wires is connected well and Power on. Red LED will light if the probe is triggered.
2. Operate the control panel, ***Control >>Bltouch>>Reset***.
3. Operate the control panel, ***Control >>Bltouch>>Self-test***, Bltouch will deploy and stow automatically, you can check if the installation height.
4. Operate the control panel, ***Control >>Bltouch>>Reset***.
5. Operate the control panel, ***Control >>Bltouch>>Deploy***, the probe will move up;
6. Operate the control panel,*** Control >>Bltouch>>Stow***, the probe will move down.

Measuring the flatness error data of the hot bed

After installed the 3DTouch/BLTouch and completed the wiring, you need to do some steps to measure the flatness error data of the hot bed.

1. Level corners.

If leveling nuts and springs are installed between your printing platform and the bed bracket, you need to manually level the four corners of the hot bed to a basically same height. Please refer to the instructions for the 3D printer for the specific process.

2. Catch Prob Z offset

Since the installation position of the 3DTouch/Bltouch on the print head for each machine cannot be completely consistent, we need to first obtain a height deviation between the bottom of the nozzle and the bottom of the leveling probe, also known as the **Probe Z Offset**.

⚠NOTE: Due to the deformation of the hot bed under heating and unheated conditions, we suggest heating the hot bed to about 60 ° for this test.

- **For LCD12864 screen**
  1. Do ***Montion>> Bed Leveling>> Auto HOME***
  2. Do ***Montion>> Bed Leveling>> Catch Z Offset***
  3. Wait for the end of the test to see the Z offset value. Do Montion>> Bed Leveling>> Probe Z Offset.
  4. Do ***Montion>> Bed Leveling>> Store Settings***, Save the Z offset value.

- **For LCD-DWIN screen**
  1. Set the HOME Z OFFSET to 0. Do ***Control>>Configure>>HOME Z Offset: 0.0*** and then Do ***Control>>Store settings***.
  2. Do ***Control>> Configure>> Auto Leveling(From OFF to ON)*** to turn on “Auto leveling” menu

3. Do ***Prepare>> Bed Leveling>>Catch Z-Offset***

3. Do leveling measure

Next, you need to run a hot bed height deviation measurement, and the measured deviation value will be saved in the machine's memory. When printing, the machine will perform height correction according to this deviation value.

- **For LCD12864 screen**
  1. Do ***Montion>> Bed Leveling>> Auto HOME***
  2. Do ***Montion>> Bed Leveling>> Level Bed***
  3. Wait for the end of the test.Operate Auto Home again, the auto leveling will change from off to on. It indicates that the automatic leveling feature is actived.

- **For LCD-DWIN screen**
  Do ***Prepare>> Bed Leveling>>Auto Leveling***

After measure done, the state of Auto leveling on Leveling menu will change from *Unactived* to *Actived*.

4. Check the measuing data

During the measurement process, you can check the measured data and determine whether the deviation is too large to correct the hot bed, or there may be other issues.
NOTE:

1. The measurement result should be between -1.0 to 1.0 mm. If it exceeds, it is recommended that you try to fine tune the printer or improve the flatness of the hotbed, because it may affect the printing quality.
2. If you found that there is a large deviation in data arrangement between the Left/Right sides or the Front/Back sides, please adjust the bottom screw of the hotbed (when the data is + turn down the hotbed, when the data is - turn up the hotbed).

- **For LCD12864 screen**, the measuring data will show on the bottom of screen when probing.
- **For LCD-DWIN screen**, the measuring data will show on the LCD screen when probing.

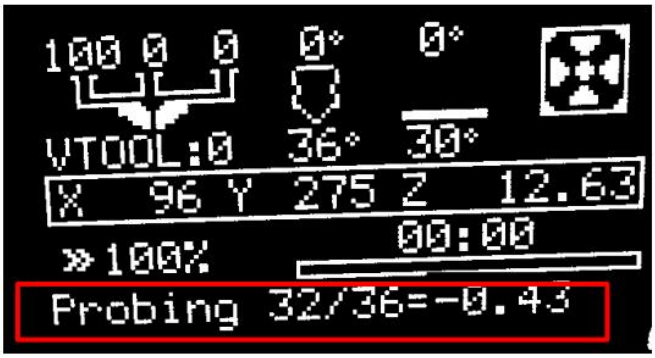

Apply bed auto leveling feature

Auto leveling feature will be disable automatically when the printer reset, you can turn it on manually or let it do automatically every time when printing from SD card.

Active auto leveling feature by manually

- **For LCD12864 screen**
    1. Do ***Motion>> Bed Leveling>> Level Bed >>Auto Home***
    2. Do ***Motion>> Bed Leveling>> Level Bed >>bed leveling: OFF*** Change to ***ON***.
- **For LCD-DWIN screen**

1. Do ***Prepare>> HOME>> Home All***
2. Do ***Control>> Configure>> Active Autolevel: OFF*** Change to ***ON*** After do these 2 steps, the printer will apply stored leveling correction parameters in the last "bed leveling". ⚠️ **Note: if you adjusted the bed screws or probe, you need to do "Measuring the flatness error data of the hot bed" again before activing auto leveling feature by manually**.

👍 Active bed auto leveling each printing from SD card.

It is recommended to add an automatic leveling measurement to the "start gcode" code of slicing software, so that a flatness measurement is performed before each printing.
To add a G29 command following G28 command in the "start gcode" of slicing software.

@ Cura

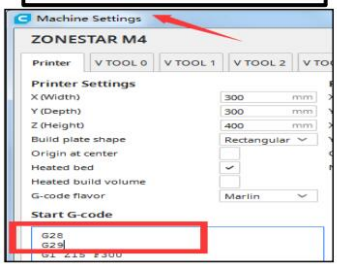

@ Repetier-host Cura Engine

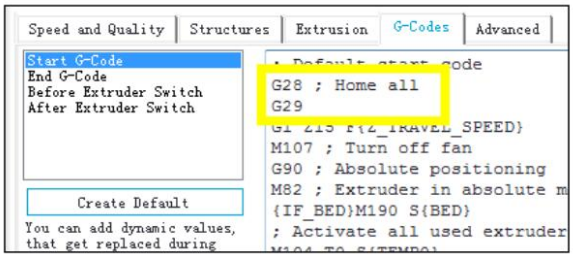

@ Simplify3d

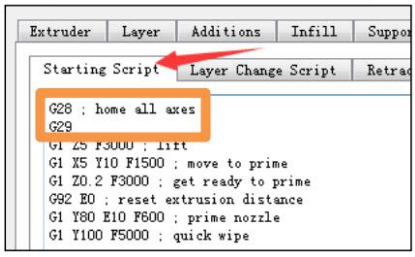

Appendix

What is “Probe Z offset ”and “HOME Z offset”

“probe Z offset”: it means the distance from the nozzle to the the sensing plane while the probe is triggered. **“Catch Z Offset”** function will get an average of **“probe Z offset”** automatically. We MUST manual level the bed before doing **“Catch Z Offset”**, otherwise the printer can’t get **“probe Z offset”** correctly.

How to correct “Probe Z offset ” and “HOME Z offset”

For various reasons, the settings of **“home Z offset”** and **“probe Z offset”** may not be accurate, so you can manually adjust them to be more accurate.

1. When doing **bed leveling > > auto leveling**:

- if most of the obtained data showed in the table are shifted to the Positive, you can decrease the **“Probe Z offset”** and do **"auto leveling/level bed"** again.
- if most of the obtained data showed in the table are shifted to the Negative, you can increase the **“probe Z offset”** and do **"auto leveling/level bed"** again. PS: Ignore the datas at the 4 corners, it will be optimized in the firmware.

2. If you find that the nozzle is too close/far away from the printing plane when printing the first layer, you can incease / decrease **home Z offset** then print it again.