Dock-HW Assembly Document

Top View

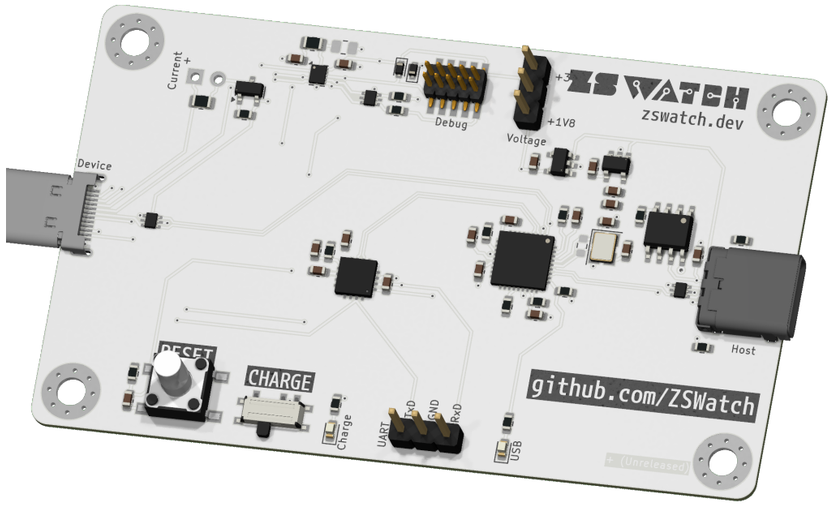

Bottom View

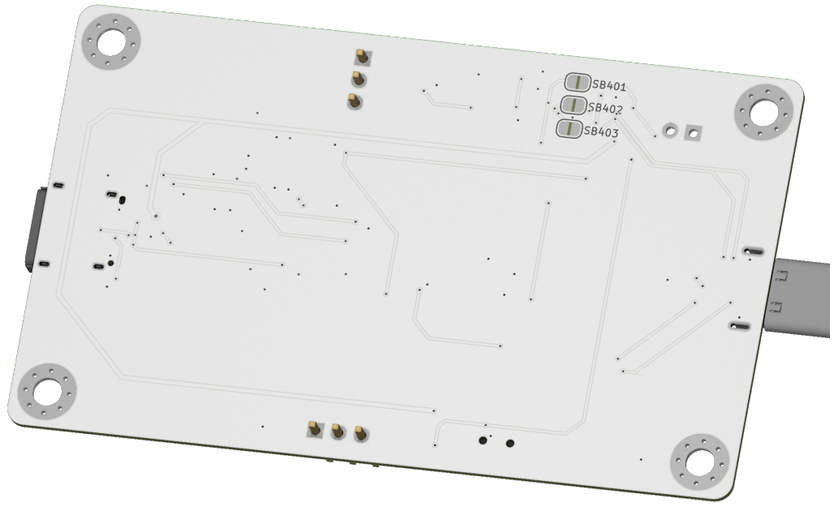

Comments: ZSWatch	Company: **ZSWatch**		Variant: PRELIMINARY	Git Hash: 75901a3
	Board Name: **Dock-HW**		Project Name: **ZSWatch Dock**	
Sheet Title: Top/Bottom View	File Name: ZSWatch-Dock.kicad_pcb	Designer: Daniel Kampert	Date: 2025-07-13	Revision: + (Unreleased)
Sheet Path:		Reviewer:	Size: **A3**	Sheet: **1** of **3**

Dock-HW Assembly Document

Top Assembly (Scale 1:1)

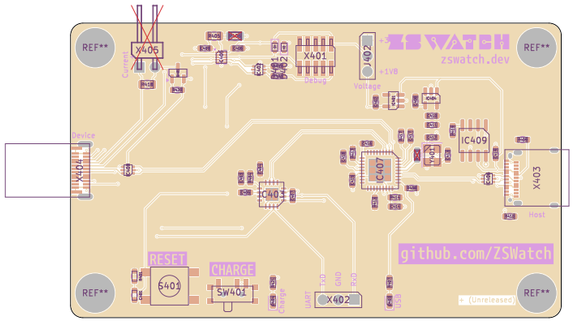

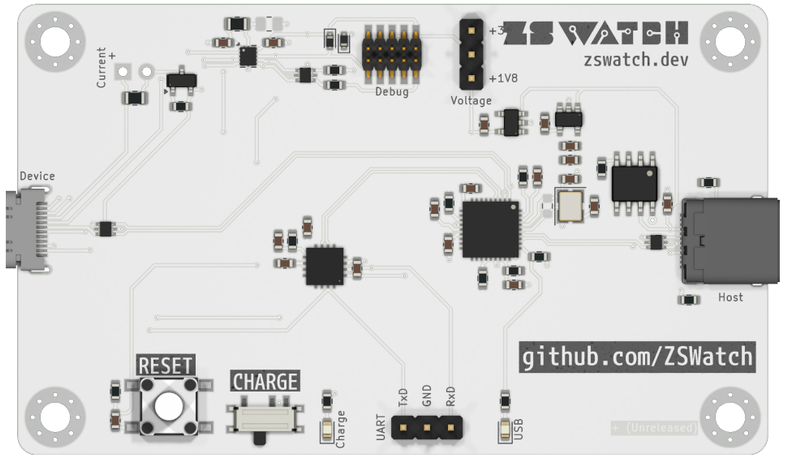

ASSEMBLY NOTES (UNLESS OTHERWISE SPECIFIED)

1) DO NOT POPULATE PARTS ARE MARKED WITH A RED CROSS.

2) DO NOT POPULATE PARTS ARE NOT PRESENT IN THE BOM.

3) IF CONFLICTING INFORMATION IS FOUND BETWEEN THE ASSEMBLY FILE AND BOM, BOM SHOULD BE USED AS THE MAIN SOURCE.

4) CONFORMAL COATING IS NOT REQUIRED.

5) DOT IDENTIFIES PIN #1 LOCATION AND DEVICE ORIENTATION WHEN VIEWED FROM THE TOP.

Components

Type	Front Side	Back Side	Total
THT	2	0	2
SMD	56	0	56
Total	58	0	58

Comments: ZSWatch	Company: ZSWatch		Variant: PRELIMINARY	Git Hash: 75901a3
	Board Name: Dock-HW		Project Name: ZSWatch Dock	
Sheet Title: Top Assembly (Scale 1:1)	File Name: ZSWatch-Dock.kicad_pcb	Designer: Daniel Kampert	Date: 2025-07-13	Revision: + (Unreleased)
Sheet Path:		Reviewer:	Size: A3	Sheet: 2 of 3

Dock-HW Assembly Document

Bottom Assembly (Scale 1:1)

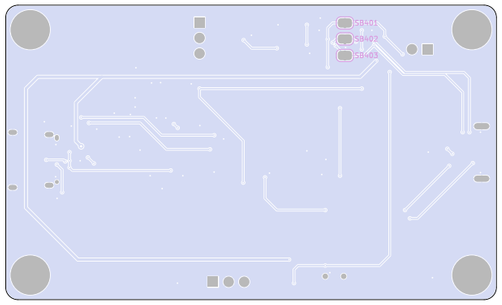

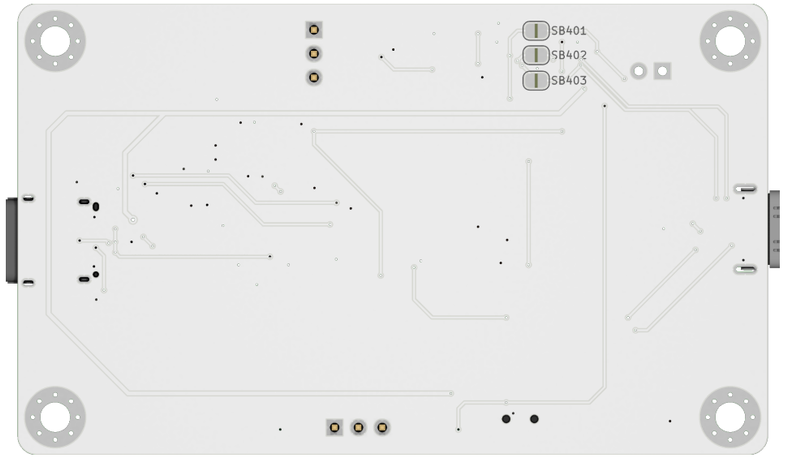

Comments: ZSWatch	Company: **ZSWatch**		Variant: PRELIMINARY	Git Hash: 75901a3
	Board Name: **Dock-HW**		Project Name: **ZSWatch Dock**	
Sheet Title: Bottom Assembly (Scale 1:1)	File Name: ZSWatch-Dock.kicad_pcb	Designer: Daniel Kampert	Date: 2025-07-13	Revision: + (Unreleased)
Sheet Path:		Reviewer:	Size: **A3**	Sheet: **3** of **3**