Dock-HW

Variant: PRELIMINARY

2026-02-23

Rev + (Unreleased)

Page	Index	Page	Index	Page	Index	Page	Index
1	Cover Page	11	.....	21	.....	31	.....
2	Block Diagram	12	.....	22	.....	32	.....
3	Project Architecture	13	.....	23	.....	33	.....
4	Main	14	.....	24	.....	34	.....
5	Revision History	15	.....	25	.....	35	.....
6	.....	16	.....	26	.....	36	.....
7	.....	17	.....	27	.....	37	.....
8	.....	18	.....	28	.....	38	.....
9	.....	19	.....	29	.....	39	.....
10	.....	20	.....	30	.....	40	.....

TOP VIEW

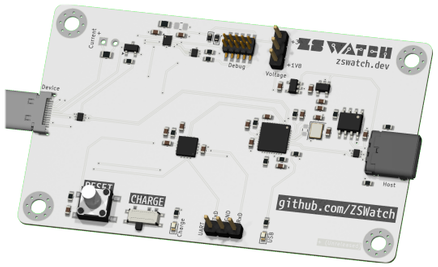

BOTTOM VIEW

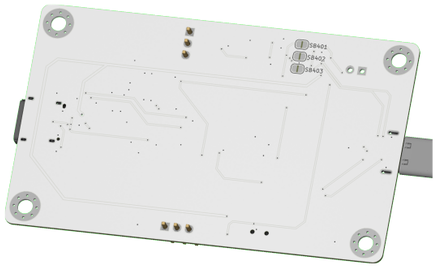

NOTES

Comment

Not fitted components are marked as ✗

DRAFT - Very early stage of schematic, ignore details.
PRELIMINARY - Close to final schematic.
CHECKED - There shouldn't be any mistakes. Contact the engineer if you find any.
RELEASED - A board with this schematic has been sent to production.

Date: 23-Feb-2026

DESIGN CONSIDERATIONS

DESIGN NOTE: Example text for informational design notes.

DESIGN NOTE: Example text for debug notes.

DESIGN NOTE: Example text for cautionary design notes.

DESIGN NOTE: Example text for critical design notes.

LAYOUT NOTE: Example text for critical layout guidelines.

Comments:	Company: ZSWatch		Variant: PRELIMINARY	Git Hash: 01b6f71
	Board Name: Dock-HW		Project Name: ZSWatch Dock	
Sheet Title: Dock-DevKit	File Name: ZSWatch-Dock.kicad_sch	Designer: Daniel Kampert	Date: 2025-07-13	Revision: + (Unreleased)
Sheet Path: /		Reviewer:	Size: A3	Sheet: 1 of 5

[2] Block-Diagram

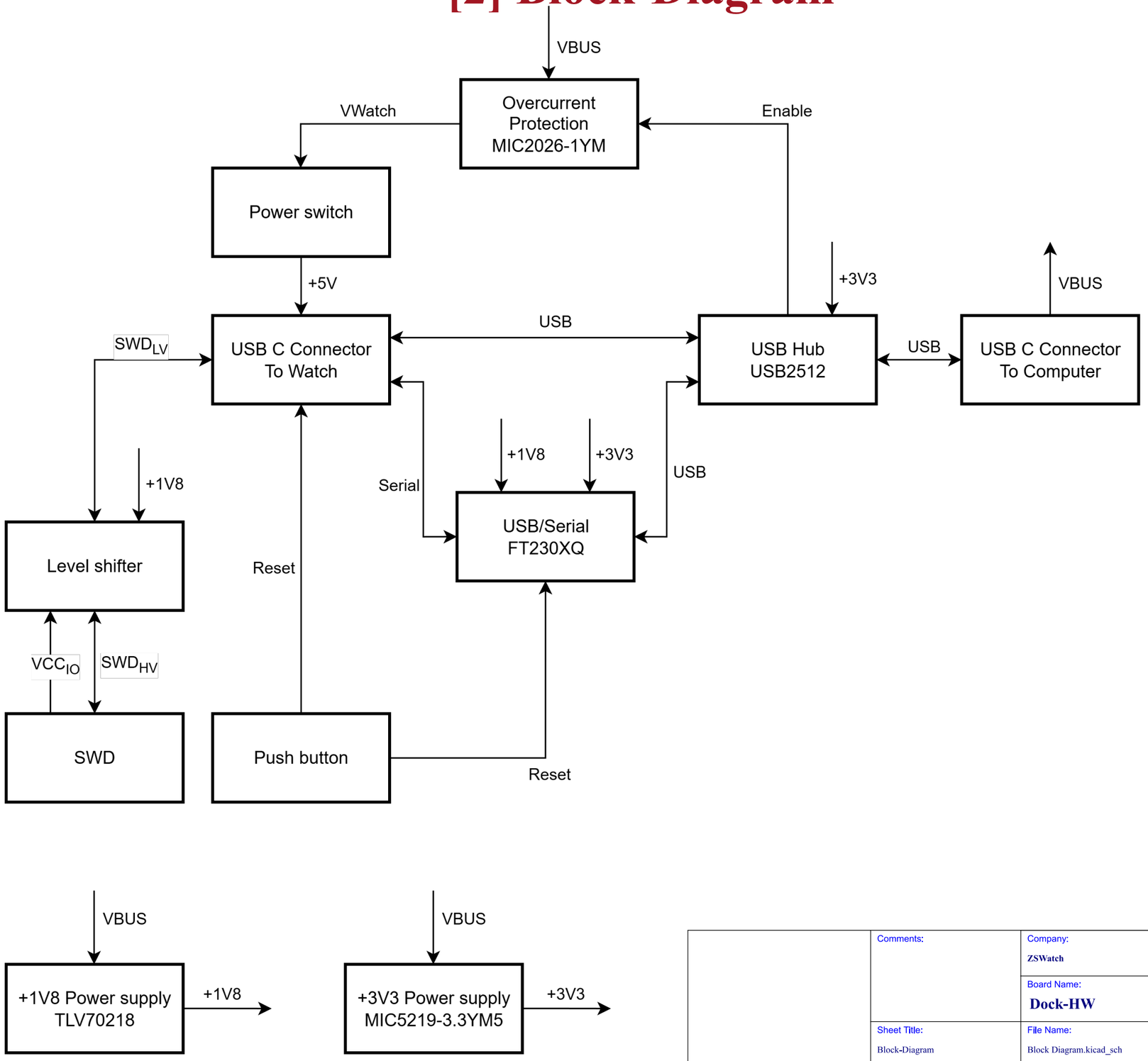

Target specifications:

Input voltage:	+5 V
Spec 2	??
Spec 3	??
Spec 4	??

Comments:	Company: ZSWatch		Variant: PRELIMINARY	Git Hash: 01b6f71
	Board Name: Dock-HW		Project Name: ZSWatch Dock	
Sheet Title: Block-Diagram	File Name: Block Diagram.kicad_sch	Designer: Daniel Kampert	Date: 2025-07-13	Revision: + (Unreleased)
Sheet Path: /Block Diagram/		Reviewer:	Size: A3	Sheet: 2 of 5

Main

Page 4

File: Main.kicad_sch

Comments:	Company: **ZSWatch**		Variant: PRELIMINARY	Git Hash: 01b6f71
	Board Name: **Dock-HW**		Project Name: **ZSWatch Dock**	
Sheet Title: Power-Management	File Name: Project Architecture.kicad_sch	Designer: Daniel Kampert	Date: 2025-07-13	Revision: + (Unreleased)
	Sheet Path: /Project Architecture/	Reviewer:	Size: **A4**	Sheet: **3** of **5**

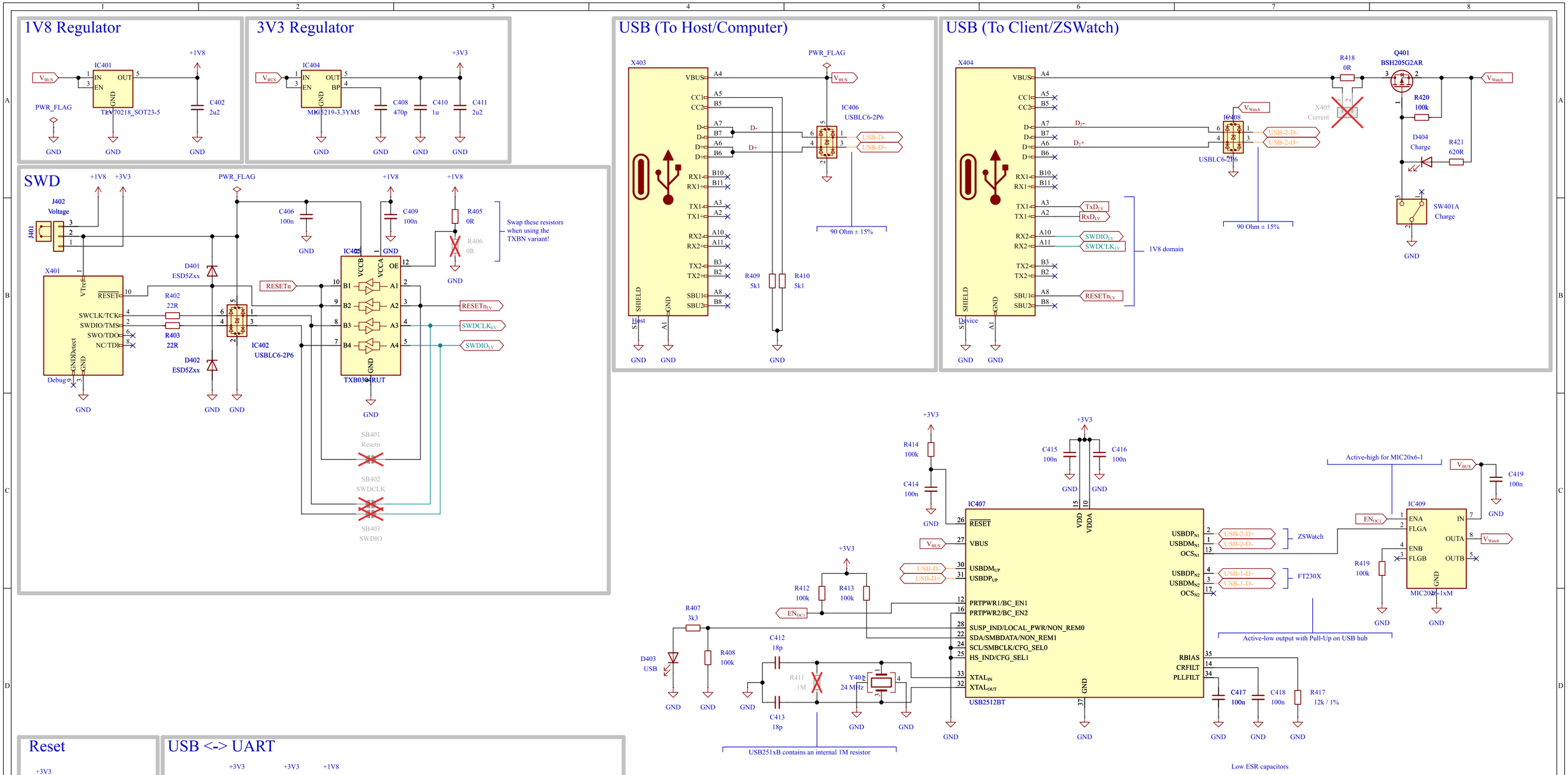

Hub configuration:
- All ports are non-removable (REM0 = low and REM1 = high)
- LED is active low (REM0 = low and REM1 = high)
- Strap options enabled (CFG_SEL0 and CFG_SEL1 = low)
- Self-powered operation enabled (CFG_SEL0 and CFG_SEL1 = low)
- Individual power switching enabled (CFG_SEL0 and CFG_SEL1 = low)
- Individual over-current sensing enabled (CFG_SEL0 and CFG_SEL1 = low)
- Enable battery option for port w (BC_EN2 = high)

Comments:	Company: ZSWatch		Variant: PRELIMINARY	Git Hash: 01b6f71
	Board Name: Dock-HW		Project Name: ZSWatch Dock	
Sheet Title: ZSWatch Dock v2	File Name: Main.kicad_sch	Designer: Daniel Kampert	Date: 2025-07-13	Revision: + (Unreleased)
Sheet Path: /Project Architecture/Main/		Reviewer:	Size: A3	Sheet: 4 of 5

[5] Revision-History

Version 2.2.0 - 2025-09-18

Fixed

- Fix inverted Charge-Switch (#51)
- Flip Rx and Tx lines for USB UART (#48)
- Fix wrong reset button (#45)
- Fix wrong pin header for SWD (#44)

Added

- Add new KiCad template (#42)
- Add 22R series resistors for SWD lines (#52)
- Add 0R resistors (NA) to bridge the level shifter (#54)

Changed

- Replace USB connector with edge mounted female USB (#61)
- Replace level shifter with TXB0102 (#59)
- Change silkscreen to white (#60)
- Replace the USB LED with a darker one (#58)
- Replace ESD diodes with USBLC6-2P6 (#50)

${RELEASE_TITLE_...}

${RELEASE_BODY_...}

${RELEASE_TITLE_...}

${RELEASE_BODY_...}

${RELEASE_TITLE_...}

${RELEASE_BODY_...}

Comments:	Company: ZSWatch		Variant: PRELIMINARY	Git Hash: 01b6f71
	Board Name: Dock-HW		Project Name: ZSWatch Dock	
Sheet Title: Revision-History	File Name: Revision History.kicad_sch	Designer: Daniel Kampert	Date: 2025-07-13	Revision: + (Unreleased)
Sheet Path: /Revision History/		Reviewer:	Size: A4	Sheet: 5 of 5