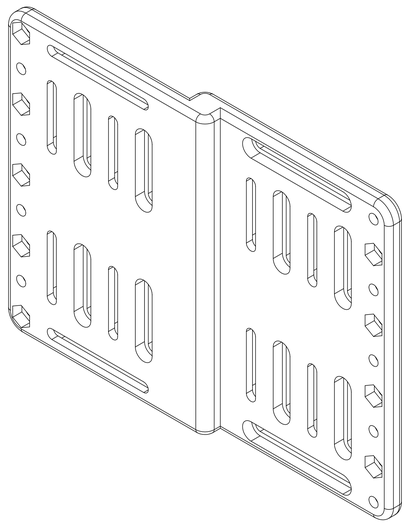

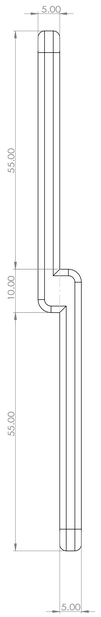

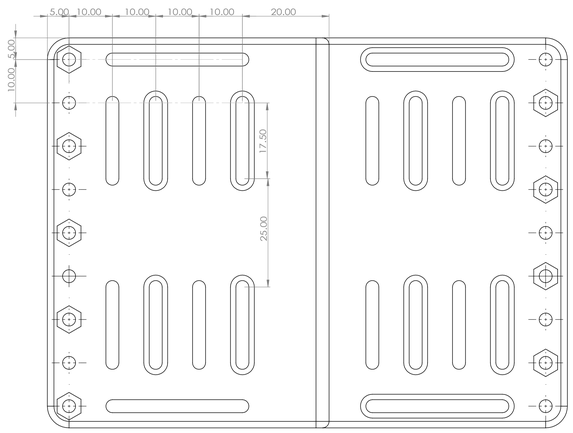

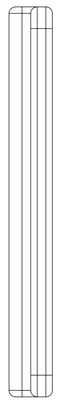

UNLESS OTHERWISE SPECIFIED: DIMENSIONS ARE IN MILLIMETERS TOLERANCES: LINEAR: ANGULAR:			FINISH:				DEBURR AND BREAK SHARP EDGES	DO NOT SCALE DRAWING	REVISION
	NAME	SIGNATURE	DATE					TITLE:	
DRAWN									
CHK'D									
APPV'D									
MFG									
Q.A				MATERIAL:				DWG NO.	A0
				WEIGHT:				SCALE:2:1	SHEET 1 OF 1