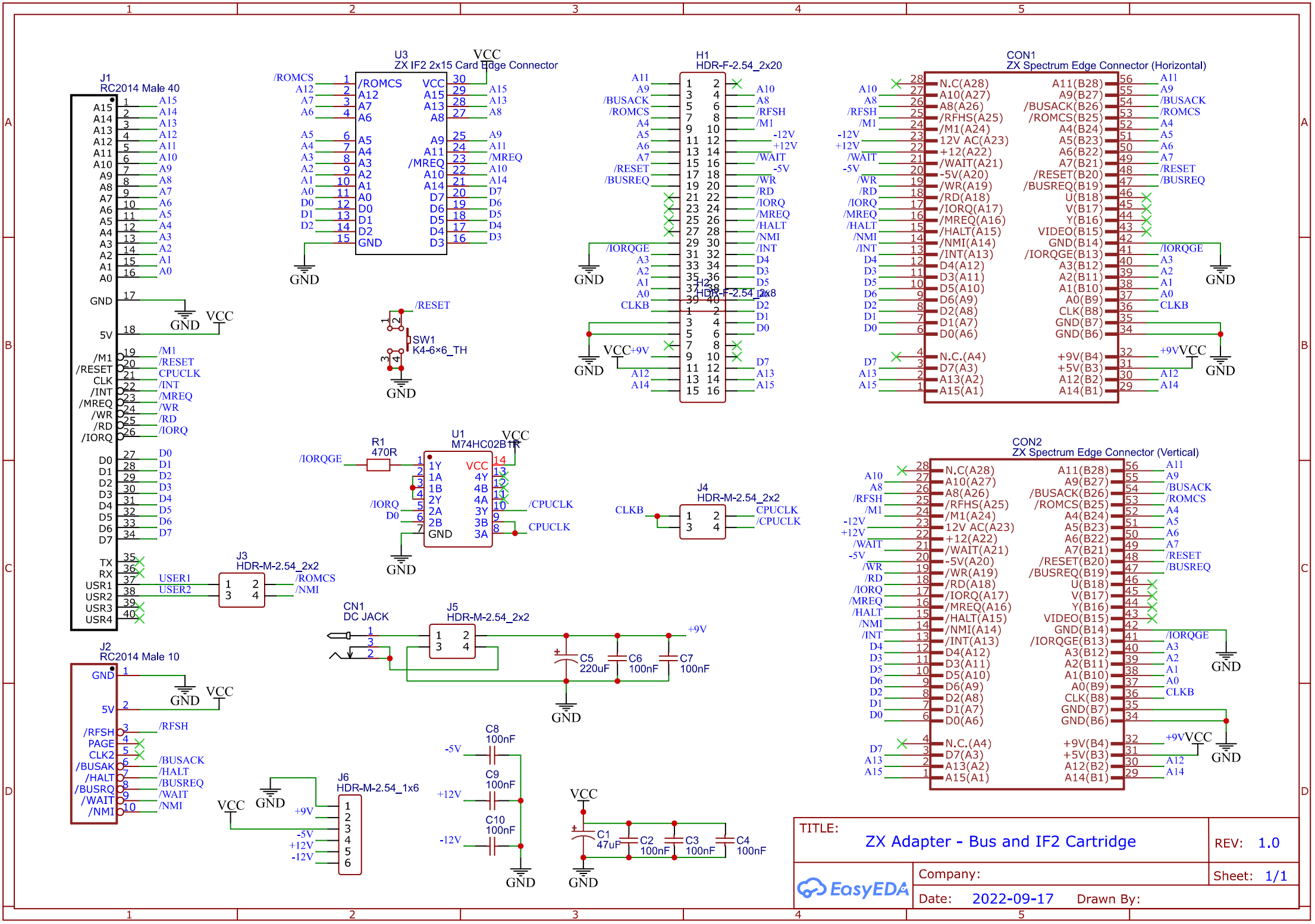
J1
RC2014 Male 40
U3
ZX IF2 2x15 Card Edge Connector
H1
HDR-F-2.54_2x20
H2
HDR-F-2.54_2x8
CON1
ZX Spectrum Edge Connector (Horizontal)
SW1
K4-6×6_TH
R1
470R
U1
M74HC02B1R
J4
HDR-M-2.54_2x2
J3
HDR-M-2.54_2x2
CON2
ZX Spectrum Edge Connector (Vertical)
CN1
DC JACK
J5
HDR-M-2.54_2x2
J2
RC2014 Male 10
J6
HDR-M-2.54_1x6
C1 47uF
C2 100nF
C3 100nF
C4 100nF
C5 220uF
C6 100nF
C7 100nF
C8 100nF
C9 100nF
C10 100nF
VCC
GND
TITLE:
ZX Adapter - Bus and IF2 Cartridge
REV: 1.0
Company:
Sheet: 1/1
Date: 2022-09-17
Drawn By:
EasyEDA