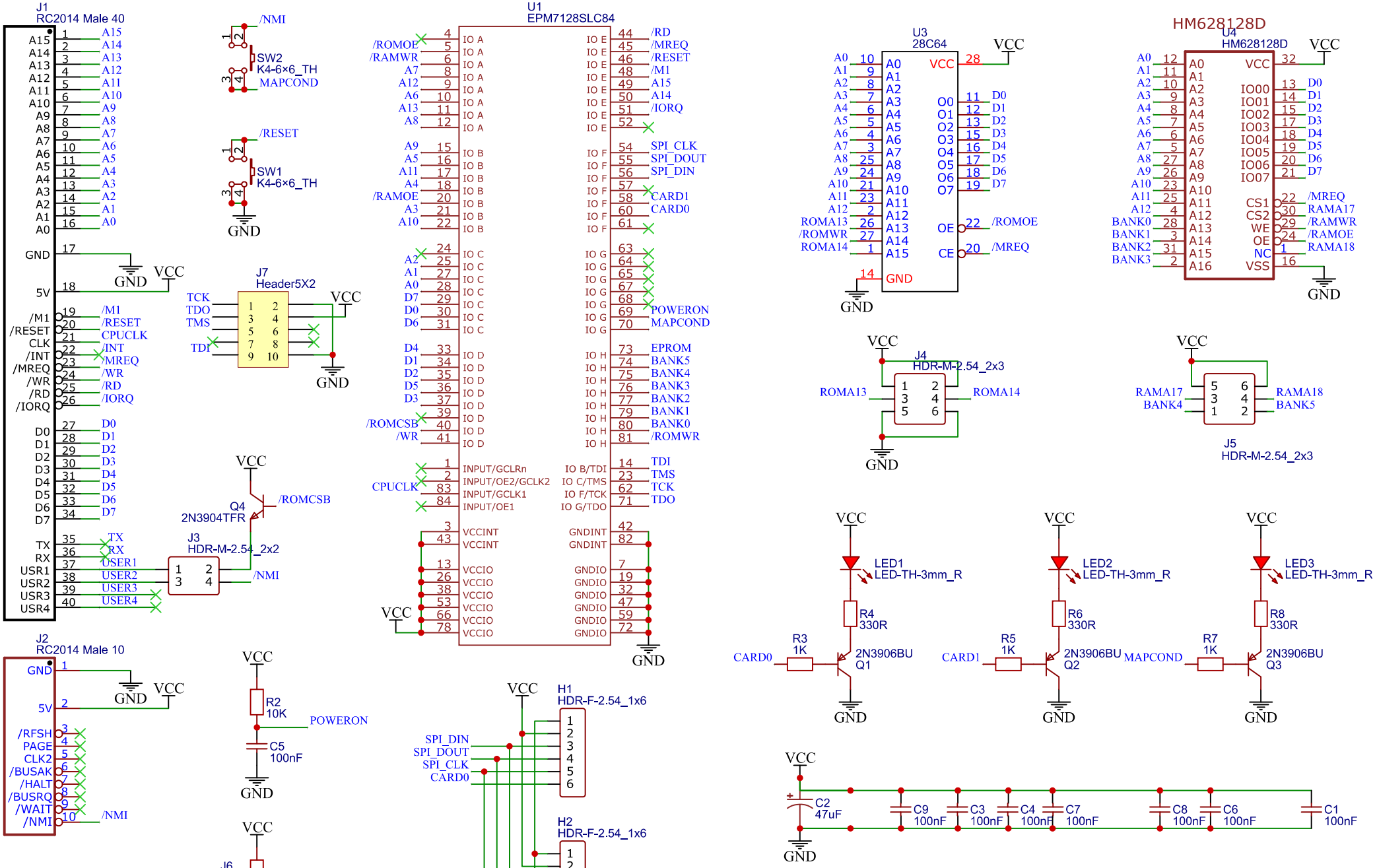

TITLE: DIVMMC - RC2014 BUS VERSION

REV: 1.0

Company:

Sheet: 1/1

Date: 2022-01-12

Drawn By: