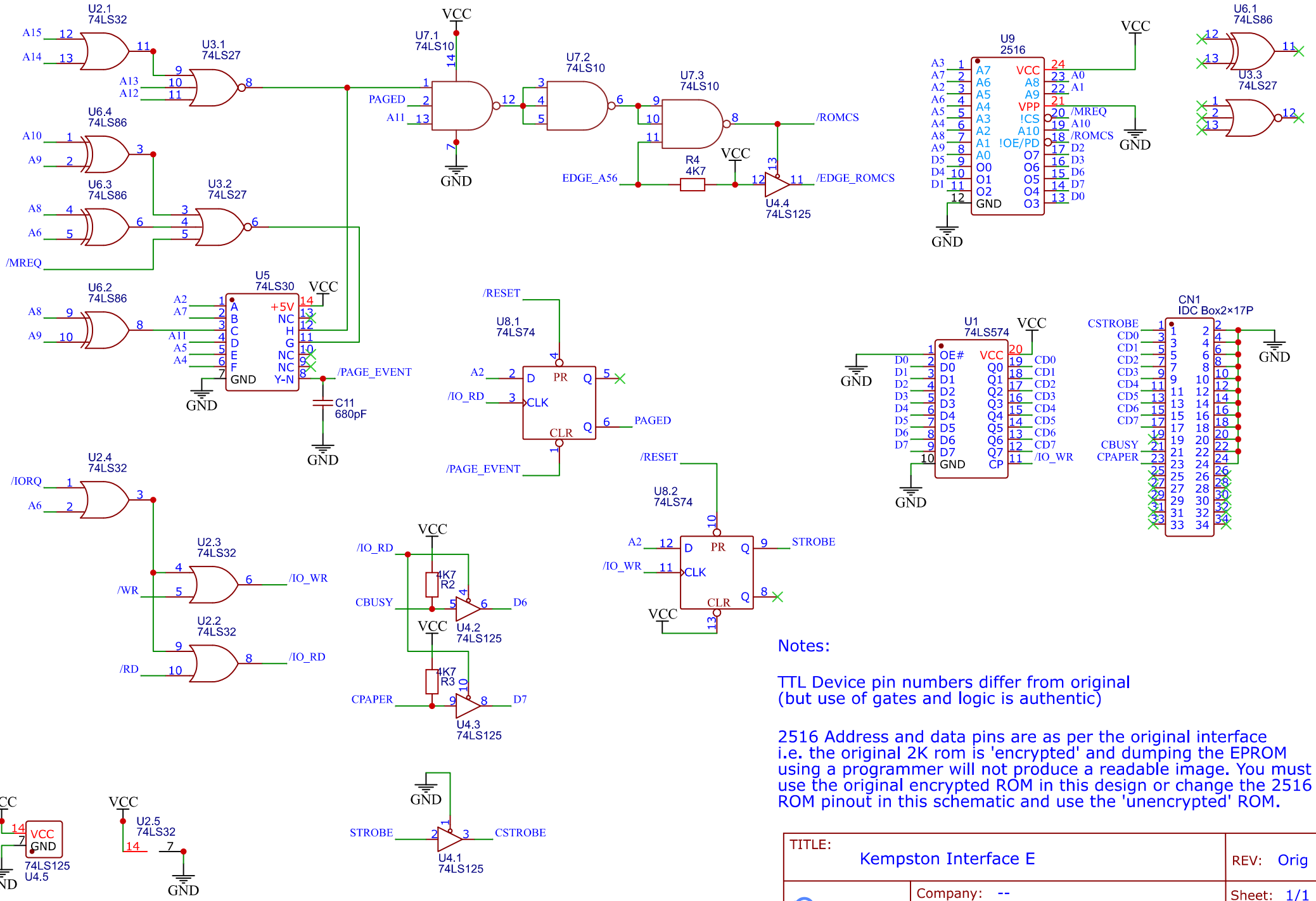

Notes:

TTL Device pin numbers differ from original
(but use of gates and logic is authentic)

2516 Address and data pins are as per the original interface
i.e. the original 2K rom is 'encrypted' and dumping the EPROM
using a programmer will not produce a readable image. You must
use the original encrypted ROM in this design or change the 2516
ROM pinout in this schematic and use the 'unencrypted' ROM.

TITLE: Kempston Interface E		REV: Orig
EasyEDA	Company: --	Sheet: 1/1
	Date: 24-08-2023 Drawn By:	