3.8 A 23.6ppm/°C Monolithically Integrated GaN Reference Voltage Design with Temperature Range from -50°C to 200°C and Supply Voltage Range from 3.9 to 24V

Cheng-Hsing Liao[1], Shang-Hsien Yang[1], Meng-Yin Liao[1], Kai-Cheng Chung[1], Neha Kumari[1], Ke-Horng Chen[1], Yin-Hsi Lin[2], Shian-Ru Lin[2], Tsung-Yen Tsai[2], Ying-Zong Juang[3]

[1]National Chiao Tung University, Hsinchu, Taiwan
[2]Realtek Semiconductor, Hsinchu, Taiwan
[3]Taiwan Semiconductor Research Institute (TSRI), Hsinchu, Taiwan

The demand for automotive electronics is increasing in autonomous-driving electric vehicles. Automotive electronics use high-power-density DC-DC converters that are required to withstand extreme operating temperatures up to 200°C. As depicted in the top left of Fig. 3.8.1, conventional bandgap and CMOS reference-voltage circuits have a lower operating temperature [1-8]. Although power consumption can be effectively reduced from 2.6nW [2] to 192pW [8], the reference-voltage circuits are not suitable for high-power-density applications due to the limited temperature range.

For industrial GaN applications, the supply voltage needs to support a wide operating range from 5 to 24V. Meanwhile, as shown in the bottom left of Fig. 3.8.1, state-of-the-art CMOS supply voltages are usually in the range of 0.45 to 4.0V. Although one additional cascode pre-regulator in a CMOS process can regulate a supply voltage $V_{pre\text{-}reg}$ for the reference voltage circuit to extend the supply-voltage range as shown in the top right of Fig. 3.8.1, the additional power consumption would reduce overall efficiency. In contrast to a CMOS process, standard devices in a GaN process do not support P-type transistors, which imposes a design challenge to juggle between both low quiescent current and high accuracy. In the bottom right of Fig. 3.8.1, the conventional reference-voltage circuit in a GaN process is designed using a cascode structure [1] to generate proportional-to-absolute-temperature (PTAT) and complementary-to-absolute temperature (CTAT) coefficients. The insertion of D_3, D_4, and the depletion-mode GaN device (D-GaN) Q_{D1} introduces a feedback loop to generate a PTAT I_{DD}. When the temperature increases, V_{SDB3} and V_{SDB4} are reduced, and Q_{D1} current I_{DD} also increases. By biasing the CTAT Schottky Barrier Diodes (SBD) D_1 and D_2 with I_{DD}, a low temperature coefficient (TC) is achieved at the reference voltage V_{REF}. Unfortunately, the D-GaN, SBDs, D_1, D_2, D_3, and D_4 exhibit linear relationships between the threshold voltage and temperature, each with independent coefficients, causing an unacceptably large TC in the range of 70ppm/°C. Furthermore, since $V_{REF} = V_{DD}-V_{SDB,1}-V_{SDB,2}$, V_{REF} is seriously affected by V_{DD}. Efficiency is also poor since I_{DD} is large.

In this paper, a monolithically integrated reference voltage is implemented using a GaN process, as shown in the top left of Fig. 3.8.2. The reference-voltage circuit has a current loop with a gain of A_I. When A_I is large, the feedback current I_{FB} would be approximately equal to the reference current I_{REF}. The threshold voltage $V_{T,D}$ of the D-GaN transistor and the threshold voltage $V_{T,E}$ of the enhancement-mode GaN (E-GaN) transistor are PTAT. As shown in the bottom left of Fig. 3.8.2, when temperature increases, the barrier height (ϕ_b) increases but the charge-carrier density of the 2-DEG (n_S) degrades. Owing to the p-GaN gate structure, the $V_{T,E}$ of the E-GaN varies widely from +1.19 to 2.23V (at V_{GS} = 5V) as shown in the right of Fig. 3.8.2, under the temperature variation from -50°C to 200°C. On the other hand, a smaller $V_{T,D}$ variation of the D-GaN varies from -0.82 to -0.55V (at V_{GS} = 1V) over the same temperature range. The TC of the D-GaN is smaller than that of the E-GaN.

A large resistor R_1 is used to limit the value of I_{REF} to achieve low quiescent power consumption and bias D-GaN Q_{D1} with a V_{GS1} equal to its threshold voltage $V_{T,D1}$. Since $I_{REF} = V_{SG1}/R_1 = -V_{T,D1}/R_1$, the derived I_{REF} exhibits CTAT characteristics. Assuming that V_{REF} has a low TC when A_I is large, the TC of I_{FB} is CTAT. After the operation of the current mirror (Q_{E3} and Q_{E2}), the I_{FB} is mirrored to I_{D2} of Q_{E2} to get $I_{D2} \approx I_{FB}$. Since $I_{D2} = I_{REF}\times(A_I/(1+A_I))$, the I_{FB} can be approximately the same as I_{REF} if A_I is large. Therefore, the derived reference voltage V_{REF} is the summation of $I_{FB}\times R_2$ and V_{GS3} of Q_{E3}. However, V_{REF} is still dependent on the V_{DD} because the drain-to-source voltage V_{DS} seriously affects the $V_{T,E}$ of the E-GaN with a slope of -36.3mV/V, which is depicted in the threshold voltage vs. $V_{DS\ graph}$. As shown in the ΔV_{DS} and ΔI vs. V_{DD} graphs on the right of Fig. 3.8.2, throughout the range of V_{DD} from 5 to 24V, the difference voltage ΔV_{DS} ($=V_{DS2}-V_{DS3}$) changes from 2.2 to 2.35V. Correspondingly, ΔV_{DS} causes a mirror-current mismatch ΔI ($=I_{D2}-I_{FB}$) from 0.4 to 0.44μA when I_{FB} is 1.5μA. A cascode structure is used to suppress the V_{DS} variation for ensuring $I_{FB}\approx I_{REF}$. However, conventional cascode structures require large voltage headroom and result in large supply voltage V_{DD} and reference voltage V_{REF}.

Considering the aforementioned restrictions, a wide-swing structure is adopted to reduce the voltage headroom and generate a low-voltage V_{REF} as shown in Fig. 3.8.3. Since $I_{FB}\approx I_{REF}\approx 0$, the gate-to-source voltage V_{GS3} of Q_{E3} would be approximately equal to the threshold voltage $V_{T,E3}$ of Q_{E3}. Since $V_{REF}=V_{DS3}=V_{GS3}\approx V_{T,E3}$, and $V_{T,E3}$ is PTAT, the V_{REF} itself is PTAT as well. Therefore, the reference voltage $V_{REF} = V_{T,E3}+[(R_2+R_3)(-V_{T,D1}/R_1)]$. Differentiating both sides by the temperature T and setting the $dV_{REF}/dT=0$ allows to derive TC=0. Finally, if $\beta_{E3}=\beta_{D1}\cdot(R_2+R_3)/R_1$ where β_{E3} and β_{D1} are the temperature coefficients of Q_{E3} and Q_{D1}, respectively, low TC of V_{REF} can be guaranteed over a wide temperature range.

Since a wide-swing structure can alleviate the supply-dependent problem, the minimum supply voltage of the V_{DD} is equal to $V_{DS3}+V_{GS4}-V_{GS1}+V_{OV1}$ where V_{OV1} is the overdrive voltage of Q_{D1}. Therefore, Q_{D4} in Fig. 3.8.3 replaces Q_{E4} with positive V_{GS4} in Fig. 3.8.2 to further decrease the minimum required V_{DD} because the V_{GS4} of Q_{D4} is negative. Moreover, Q_{D1} and Q_{D4} can suppress the V_{REF} variations because a lower V_{REF} can further reduce the effect of V_{DS3} on the $V_{T,E3}$. Thus, the minimum and maximum supply voltages can be extended to 3.9V and 24V, respectively. Consequently, the power of the derived reference voltage of 3.19V can be effectively reduced to 9.5μW under a supply voltage of 3.9V.

The resistors R_2 and R_3 are designed to be trimmed by the test program to further reduce the TC of the V_{REF}. The top of Fig. 3.8.4 shows the untrimmed reference voltage from 80 sample chips at the supply voltage of 8V and at 27°C. The average reference voltage is 3.23V and the standard deviation (σ/μ) is 2.41% where σ and μ are the standard deviation and the mean , respectively. After trimming, the average V_{REF} is 3.30V and σ/μ can be reduced to 0.57%. The average reference current is 3.13μA and σ/μ is 0.79% at the same measurement condition. The bottom of Fig. 3.8.4 shows the trimmed measured reference voltage in the temperature range from -50°C to 200°C from 40 sample chips. The maximum variation of the reference voltage is 22mV and the measured temperature coefficient of the V_{REF} is 23.6ppm/°C. The measured temperature coefficient of the I_{REF} is 48.5ppm/°C. The top of Fig. 3.8.5 shows that the reference voltage is 3.19V under the minimum supply voltage of 3.9V. The line sensitivity is 0.32%/V when the supply voltage ranges from 3.9 to 24V at 27°C. In the middle of Fig. 3.8.5, the total variation of reference current is from 3.01 to 3.39μA, the line sensitivity is 0.63%/V, and the power-supply rejection (PSR) is -45dB at 100Hz.

In Fig. 3.8.6, the table compares this work with prior-art reference voltages in the GaN process and CMOS process. The proposed circuit supports a wide range of supply voltage and temperature. The supply-voltage range is from 3.9V to 24V and the operating temperature range is from -50°C to 200°C. It also reduces the power consumption from 1mW in [1] to 9.5μW and decreases line sensitivity to 0.32%/V. The proposed reference voltage in the GaN process achieves the best result compared to the prior art in the table. Figure 3.8.7 shows the die micrograph with an area of 0.52mm^2.

Acknowledgment:
Thanks for the help of Patrick Chuang Ph.D. RD/MOSFET & Power Division DIODES Inc. Taiwan.

References:

[1] King-Yuen Wong et al., "Integrated Voltage Reference and Comparator Circuits for GaN Smart Power Chip Technology," *IEEE ISPSD*, pp. 14-18, June 2009.
[2] L. Magnelli et al., "A 2.6 nW, 0.45 V Temperature-Compensated Subthreshold CMOS Voltage Reference," *IEEE JSSC*, vol. 46, no. 2, pp. 465–474, Feb. 2011.
[3] Y. Osaki et al., "1.2-V Supply, 100-nW, 1.09-V Bandgap and 0.7-V Supply, 52.5-nW, 0.55-V Subbandgap Reference Circuits for Nanowatt CMOS LSIs," *IEEE JSSC*, vol. 48, no. 6, pp. 1530-1538, June 2013.
[4] J. M. Lee et al., "A 29nW Bandgap Reference Circuit," *ISSCC,* pp. 100-101, Feb. 2015.
[5] Q. Dong et al, "A 114-pW PMOS Only, Trim-Free Voltage Reference with 0.26% Within-Wafer Inaccuracy for nW Systems," *IEEE Symp. VLSI Circuits*, pp. 1–2, June 2016.
[6] Youngwoo Ji et al.," A 9.3nW All-in-One Bandgap Voltage and Current Reference Circuit," *ISSCC,* pp. 100-101, Feb. 2017.
[7] J. Jiang et al., "A 5.6 ppm/°C Temperature Coefficient, 87-dB PSRR, Sub-1-V Voltage Reference in 65-nm CMOS Exploiting the Zero-Temperature-Coefficient Point," *IEEE JSSC*, vol. 52, no. 3, pp. 623-633, Mar. 2017.
[8] Youngwoo Ji et al., "A 192pW Hybrid Bandgap-Vth Reference with Process Dependence Compensated by a Dimension-Induced Side-Effect," *ISSCC,* pp. 308-309, Feb. 2019.

Authorized licensed use limited to: Tsinghua University. Downloaded on February 13,2026 at 02:45:39 UTC from IEEE Xplore. Restrictions apply.

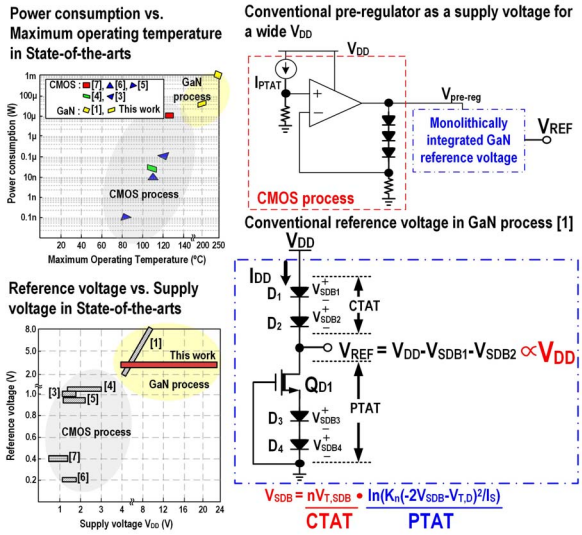

Figure 3.8.1: Comparison of conventional voltage references using CMOS and GaN processes.

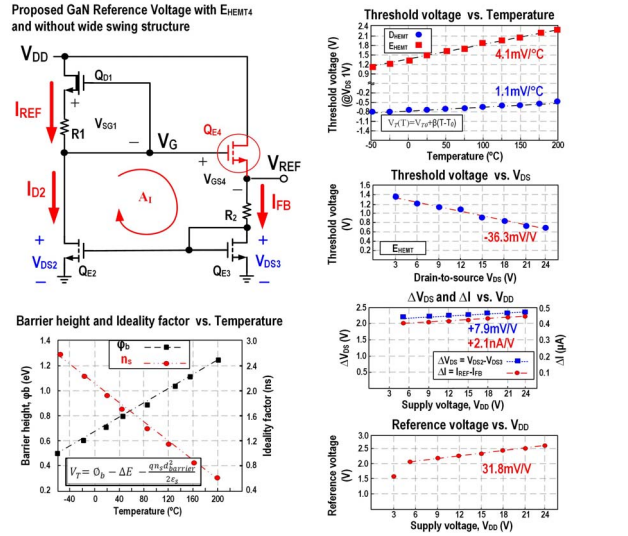

Figure 3.8.2: The current/voltage characteristics of the proposed GaN reference voltage as a function of temperature.

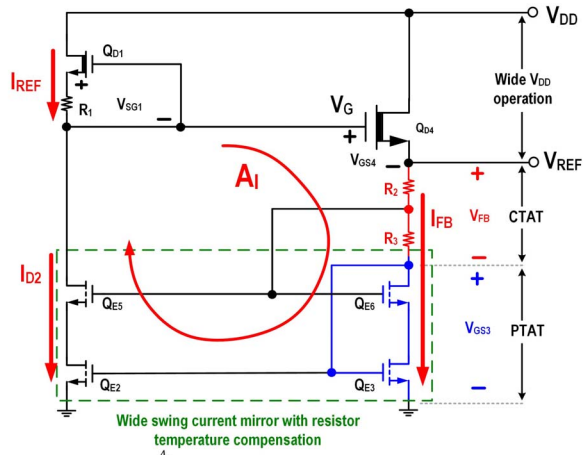

$$I_{FB} = I_{REF}\frac{A_I}{1+A_I}, \text{where } A_I \text{ is the current loop gain}$$

$$V_{REF} = V_{GS3} - V_{FB} = V_{T,E3} + \beta_{E3}(T-T_0) + \frac{-V_{T,D1} - \beta_{D1}(T-T_0)}{R_1} \times (R_2 + R_3)$$

$$\frac{\partial V_{REF}}{\partial T} = 0 = \beta_{E3} + \frac{-\beta_{D1}}{R_1} \times (R_2 + R_3)$$

Figure 3.8.3: Proposed reference voltage circuit.

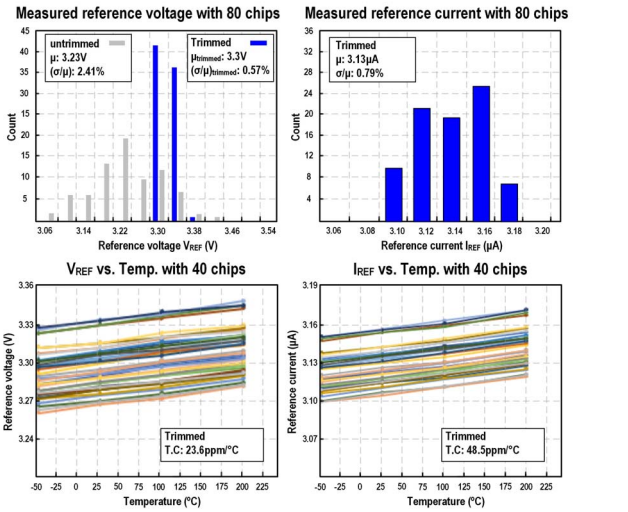

Figure 3.8.4: The distribution of trimmed and untrimmed reference voltage/current and the sample variations of current/voltage characteristics vs. temperature.

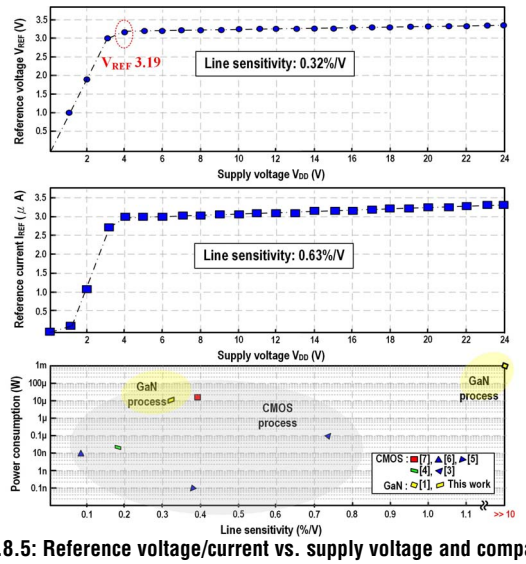

Figure 3.8.5: Reference voltage/current vs. supply voltage and comparison of line sensitivity of the proposed GaN reference against prior art.

	This work	[1] ISPSD 09	[6] ISSCC 17	[4] ISSCC 15	[7] JSSC 17	[3] JSSC 13	[5] VLSI 16
Technology (μm)	0.5	N/A	0.18	0.35	0.065	0.18	0.18
Process	GaN	GaN	CMOS	CMOS	CMOS	CMOS	CMOS
Power (μW)	9.5	1000	0.0093	0.029	13	0.1	114 (pW)
V_{DD} Range (V)	3.9~24	4~10	1.2~1.8	1.3~3.0	0.5~1.4	1.2~1.8	1.2~2.2
V_{REF} (V)	3.19	2~8	0.21	1.176	0.428	1.09	0.9862
Line Sensitivity (%/V)	0.32	N/A	0.08	0.198	0.39	0.737	0.38
PSRR @100Hz (dB)	-45	0	-46	N/A	87	-62	-42
Temp. Range (°C)	-50~200	25~250	0~110	-10~110	-40~125	-40~120	-40~85
T.C. (ppm/°C)	23.6	70	26	12.75	5.6	147	N/A
Area (mm²)	0.52	0.315	0.055	0.48	0.0104	0.0294	0.00488

Figure 3.8.6: Comparison table with state-of-the-art CMOS and GaN reference voltages.

Authorized licensed use limited to: Tsinghua University. Downloaded on February 13,2026 at 02:45:39 UTC from IEEE Xplore. Restrictions apply.

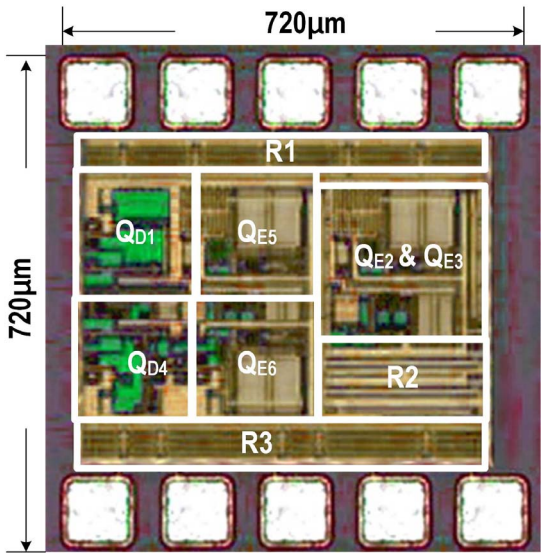

Figure 3.8.7: Die micrograph with a silicon area of 0.52mm².

Authorized licensed use limited to: Tsinghua University. Downloaded on February 13,2026 at 02:45:39 UTC from IEEE Xplore. Restrictions apply.

 978-1-7281-3205-1/20/$31.00 ©2020 IEEE