A Chopping-Free Single-Trim Bandgap Reference Using Amplifier With PTAT Offset

Haoyu Zhuang, Yuntao Cao, Shuguang Han, Siyuan Liu, Yizhan Li, Rongqing Sheng, and Qiang Li

***Abstract*— This article presents a chopping-free single-trim bandgap reference with an amplifier proportional-to-absolute-temperature (PTAT) offset. This amplifier PTAT offset is helpful for improving the BGR accuracy. Unlike the classic differential amplifiers, whose input-referred offset is usually non-PTAT, the proposed amplifier realizes a PTAT offset through controlling the current of a BJT-based structure. Similar to other PTAT error sources in a bandgap reference, this PTAT offset can be eliminated easily through a single room-temperature trim at the reference voltage. This makes the proposed circuit very simple and highly accurate, since it eliminates the need of complicated amplifier-offset cancellation techniques, such as chopping or autozeroing, that are usually used in prior single-trim bandgap reference circuits. It also eliminates the high-frequency ripple at the reference output, due to the no need of chopping. Besides the proposed structure, this article also presents a new technique to generate the amplifier bias current using only a tail resistor. Since a complicated biasing circuit is no longer needed, the proposed circuit is further simplified. Implemented in a 180-nm BCD process, the temperature coefficient (TC) is 3–8 ppm/°C at −55 °C∼125 °C after a single trim at the room temperature, the output noise is only 1.5 μV_{rms} at 0.1–10 Hz, the current consumption is 590 μA, and the active area is 0.55 mm^2. According to the best of our knowledge, this is the first ever single-trim bandgap reference with no need of chopping or autozeroing.**

***Index Terms*— Bandgap reference, proportional-to-absolute-temperature (PTAT) amplifier offset, single trim.**

I. Introduction

THE bandgap reference circuit is an important block for generating a reference voltage independent of PVT variations. It can be used in a variety of applications, such as analog-to-digital convertor (ADC), the Internet of Things (IoT), wireless sensor network (WSN), and wearable electronic device (WED). The basic principle of the bandgap reference is to first generate a proportional-to-absolute-temperature (PTAT) voltage and a complimentary-to-absolute-temperature (CTAT) voltage and then sum them together to constitute a temperature-independent reference voltage.

The accuracy of the reference voltage is usually affected by the device mismatch and the process variation, which changes both the reference voltage absolute value and its temperature coefficient (TC). To address these issues, a trimming technique is usually needed [1], [2], [3], [4], [5], [6], [7], [8], [9], [10], [11], [12], [13], [14], [15], such as the single room-temperature trim or the multiple temperature trim. Among them, the multiple temperature trim is a classic trim technique, which trims the reference voltage at several temperatures. After such trimming, both the reference voltage absolute value and the TC can be corrected simultaneously. Its drawback is that the trimming process is complicated [1], [2], [3], [4], since it requires the change of temperature for multiple times during the trimming process. By contrast, the single trim technique trims the reference voltage only at the room temperature. Since there exists a correlation between the voltage absolute value and the TC, only one of them needs to be trimmed. Specifically, the reference voltage absolute value is often trimmed at the room temperature, which makes the TC automatically corrected at the same time. As a result, the trimming process is greatly simplified, and it is now possible to focus on the absolute value trimming at the room temperature only. Despite its advantages, the single trim technique also has a limitation. It requires the bandgap reference circuit to be carefully designed, so that there exist only the PTAT error sources [1], since the single trim itself can only remove the PTAT errors, but it cannot remove the non-PTAT errors [1]. Especially, in a bandgap reference circuit, the amplifier input-referred offset is a non-PTAT error. This means that the amplifier offset needs to be removed first before using the single trim technique. Usually, the technique to cancel the amplifier offset is complicated, such as the chopping technique or the autozeroing technique. Among them, the chopping technique can lead to an undesired high-frequency ripple at the reference output [1]. Although the ripple can be eliminated through an extra notch filter, a large Miller compensation capacitor of 15 pF is needed to ensure an enough phase margin [1], [2]. Similarly, the autozeroing technique has its drawback as well. Although the autozeroing does not incur ripple issue, its two-phase operation makes the reference output voltage not continuous any more [1].

Received 18 September 2024; revised 27 December 2024 and 7 February 2025; accepted 31 March 2025. Date of publication 28 April 2025; date of current version 29 October 2025. This article was approved by Associate Editor Fabio Sebastiano. This work was supported in part by the National Natural Science Foundation of China under Grant 62004023 and Grant 62090041 and in part by China Postdoctoral Science Foundation under Grant 2022M710624. *(Corresponding author: Haoyu Zhuang.)*

Haoyu Zhuang, Yuntao Cao, Yizhan Li, and Rongqing Sheng are with the School of Integrated Circuit Science and Engineering, University of Electronic Science and Technology of China, Chengdu 611731, China (e-mail: hyhy135@163.com).

Shuguang Han and Siyuan Liu are with CIMO Microelectronics Corporation, Chengdu 610095, China.

Qiang Li was with the University of Electronic Science and Technology of China, Chengdu 610056, China. He is now with Hamburg University of Technology (TUHH), 21073 Hamburg, Germany (e-mail: qiang.li@tuhh.de).

Color versions of one or more figures in this article are available at https://doi.org/10.1109/JSSC.2025.3560578.

Digital Object Identifier 10.1109/JSSC.2025.3560578

0018-9200 © 2025 IEEE. All rights reserved, including rights for text and data mining, and training of artificial intelligence and similar technologies. Personal use is permitted, but republication/redistribution requires IEEE permission.
See https://www.ieee.org/publications/rights/index.html for more information.
Authorized licensed use limited to: Tsinghua University. Downloaded on February 12,2026 at 08:04:14 UTC from IEEE Xplore. Restrictions apply.

This article proposes the first ever chopping-free single-trim bandgap reference by using a PTAT offset of amplifier. This amplifier PTAT offset is helpful for improving the BGR accuracy. Unlike the classic differential amplifiers whose input-referred offset is usually non-PTAT, the proposed amplifier realizes a PTAT offset through controlling the current of a BJT-based structure. Similar to other PTAT error sources in a bandgap reference, this PTAT offset can be eliminated easily through a single room-temperature trim. This makes the proposed bandgap reference circuit very simple and highly accurate. It no longer requires the complicated amplifier offset cancellation techniques, such as chopping or autozeroing. Besides the proposed structure, this article also presents a new technique to generate the amplifier bias current using only a tail resistor. This is unlike the classic amplifiers, where a complicated biasing circuit is usually needed to generate the bias current. Since this work no longer needs the complicated biasing circuit, the circuit structure is further simplified. Implemented in a 180-nm process, the TC is 3–8 ppm/°C at −55 °C to 125 °C after a single room-temperature trim, the output noise is only 1.5 μV_{rms} at 0.1–10 Hz, the current consumption is 590 μA, and the active area is 0.55 mm^2.

This article is organized as follows. Section II reviews the prior bandgap reference circuit. Section III discusses the proposed chopping-free bandgap reference. Section IV shows the improved trimming circuit. The measurement results are shown in Section V. Finally, Section VI concludes this article.

II. Prior Single-Trim Bandgap Reference

Fig. 1 shows the prior single-trim bandgap reference circuit of [1]. It uses an amplifier to clamp the bottom voltages of two resistors R_{1A} and R_{1B}. To ensure the same currents on BJT transistors Q_1 and Q_2, the resistors R_{1A} and R_{1B} have equal values. Finally, the reference voltage V_{BG} can be calculated as follows:

$$V_{BG} = V_{BE1} + \frac{R_1 + 2R_3 + 2R_T}{R_2} V_T \ln N \tag{1}$$

where V_{BE} is the base–emitter voltage of BJT transistor, V_T is the thermal voltage, and N is the emitter area ratio of Q_1 and Q_2.

The key highlight of the bandgap reference in [1] is the single room-temperature trim. In Fig. 1, the single trim technique is realized through the resistor R_T. Since the current on R_T is PTAT, the voltage on R_T is also PTAT. When we trim the resistor R_T, the PTAT voltage on R_T will change accordingly. This cancels out the PTAT errors in the reference voltage V_{BG}.

Table I summarizes the errors in the reference voltage V_{BG}. As can be seen, there are seven errors in total, three of which are PTAT errors and four of which are non-PTAT errors. Among them, all of the PTAT errors can be removed simultaneously, as long as a single room-temperature trim is used [1]. By contrast, the non-PTAT errors must be removed separately. For example, the BJT V_{BE} curvature can be removed through a curvature correction technique in [1], and the amplifier offset can be removed through a chopping or autozeroing technique. Apart from them, the BJT current gain spread and the BJT base resistance are also non-PTAT errors (see Table I).

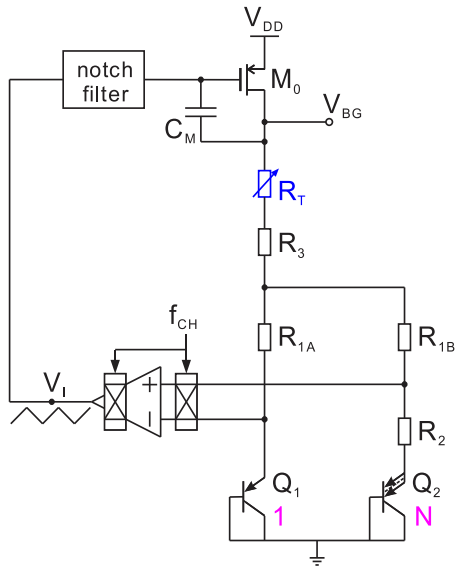

Fig. 1. Prior single-trim bandgap in [1].

TABLE I
Error Sources [1]

	Typical Value	Error Contribution	Error Property
BJT saturation current spread	±40%	±0.8%	PTAT
Resistor spread	±30%	±0.6%	
Resistor mismatch	±1%	±0.5%	
BJT V_{BE} curvature	3mV~4mV	±0.2%	Non-PTAT
Amplifier offset	±10mV	**±8%**	
BJT current gain spread	*±40%*	*±0.06% (negligible)*	
BJT base resistance	*250Ω*	*±0.04% (negligible)*	

Fortunately, these two errors are not required to be removed, since their contributions are very small (only ±0.06% and ±0.04%, respectively).

In Table I, we should be careful about the largest error source. Here, the largest error source is the amplifier offset V_{OS}, which contributes a large deviation of 8% in the reference voltage V_{BG}. Different from other error sources, since this error source is amplified [1], its contribution is very large. Specifically, as mentioned in [1], the amplifier offset V_{OS} is amplified by a factor of $1 + (R_3 + R_T)/R_1 + (R_1 + 2R_3 + 2R_T)/R_2 \approx 8$ toward the reference voltage V_{BG}. This means that a typical amplifier offset of several millivolts can lead to an error of tens of millivolts in the reference voltage V_{BG}. For easy understanding, we provide the following equation to illustrate this phenomenon:

$$V_{BG} = V_{BE1} + \frac{R_1 + 2R_3 + 2R_T}{R_2} V_T \ln N + \left(1 + \frac{R_3 + R_T}{R_1} + \frac{R_1 + 2R_3 + 2R_T}{R_2}\right) V_{OS}. \tag{2}$$

Authorized licensed use limited to: Tsinghua University. Downloaded on February 12,2026 at 08:04:14 UTC from IEEE Xplore. Restrictions apply.

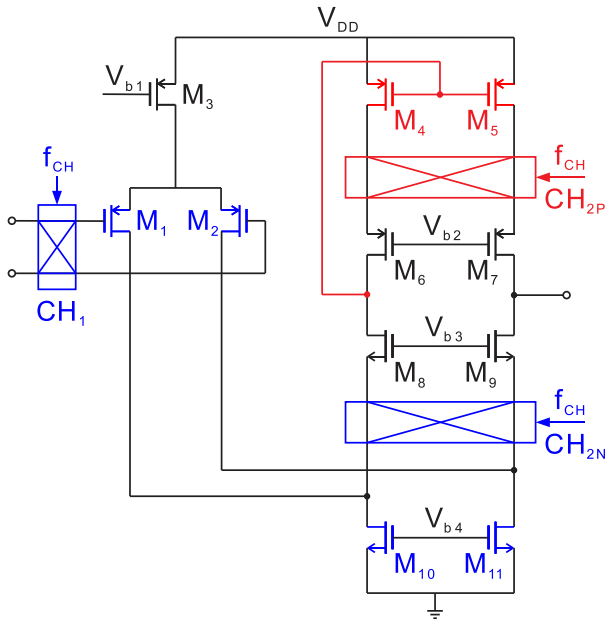

Fig. 2. Chopping amplifier in [1].

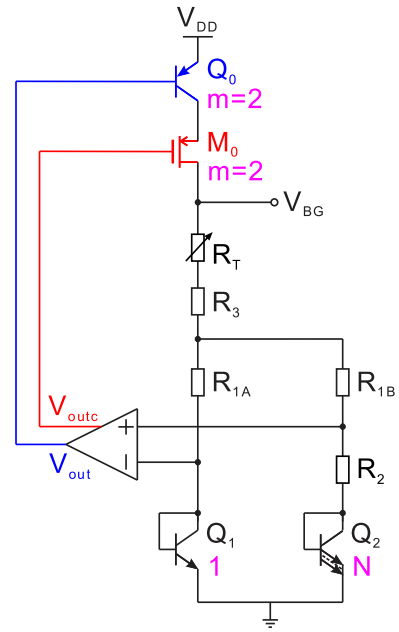

Fig. 3. Proposed single-trim bandgap reference.

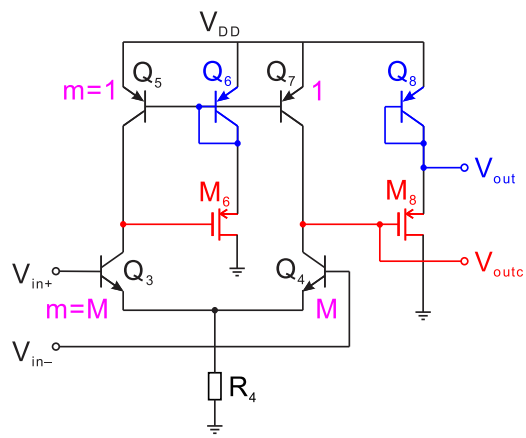

Fig. 4. Proposed amplifier with a PTAT offset V_{os}.

It can be clearly seen that the amplifier offset V_{OS} is amplified by a factor in the bracket toward the reference voltage V_{BG}.

Since the amplifier offset V_{OS} is the largest error source, it is important to remove it completely. Fig. 1 shows the chopping technique in [1]. It removes the amplifier offset effectively through changing the direction of the amplifier input and output simultaneously [1], [3]. Its drawback is that it incurs the chopping ripple. To suppress the chopping ripple, an extra notch filter is required (see Fig. 1). This notch filter suppresses the chopping ripple by generating a notch in the spectrum [1]. Its drawback is that it seriously deteriorates the loop stability, since the notch filter incurs an undesired delay in the loop [2]. As a result, to improve the loop stability, a large miller compensation capacitor C_M is required (see Fig. 1). This miller capacitor is as large as 15 pF [2], which wastes a huge area.

Another problem of the chopping technique in [1] is that the amplifier offset can only be partially removed. A residual offset still exists even after chopping. To understand this point, let us look at the chopping amplifier in Fig. 2. Since the signal paths of CH_1 and CH_{2N} are fully differential, the offset caused by M_1 and M_2 and M_{10} and M_{11} can be completely removed through chopping [1]. By contrast, the signal path of CH_{2P} is not fully differential (the configuration of M_4 and M_5 is asymmetric), and thus, the offset due to M_4 and M_5 mismatch cannot be completely removed [1]. This issue can be understood through the nonlinear I–V relationship in MOSFET. Assuming that there is a voltage change of $+\Delta V$ or $-\Delta V$ (whose absolute values are the same) in a MOSFET gate–source voltage, we can anticipate a different current change due to the nonlinear I–V relationship in the MOSFET. Similarly, a different current change also exists in the chopping current mirror M_4 and M_5 in Fig. 2. This current mismatch causes the residual offset of the amplifier even after chopping.

Overall, the chopping technique in [1] has several limitations. It incurs the chopping ripple. It requires a notch filter to suppress the chopping ripple. It needs a huge miller capacitor to ensure the loop stability, and its offset cancellation effect is limited, since it only partially removes the amplifier offset.

To solve all of these issues simultaneously, this article proposes a novel amplifier structure, whose amplifier offset no longer needs to be removed through the chopping technique in [1]. Instead, the proposed amplifier offset error can be completely removed through a single room-temperature trim, just like other PTAT error sources. This greatly simplifies the circuit structure, and it makes the circuit user-friendly.

III. Proposed Single-Trim Bandgap Reference

Fig. 3 shows the proposed single-trim bandgap reference circuit. Its amplifier is shown in Fig. 4. The proposed circuit uses both the p-n-p and n-p-n transistors, whose cross section is shown in Fig. 5. With a special circuit structure, the proposed amplifier has several advantages. First, unlike the

Authorized licensed use limited to: Tsinghua University. Downloaded on February 12,2026 at 08:04:14 UTC from IEEE Xplore. Restrictions apply.

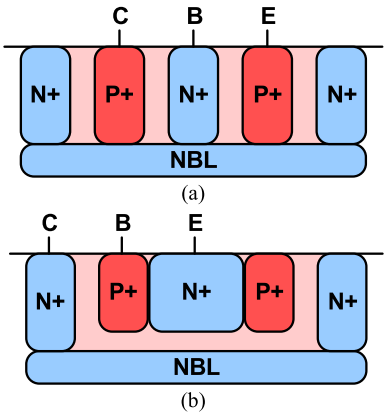

Fig. 5. Cross section of (a) p-n-p transistor and (b) n-p-n transistor.

classic amplifiers whose input-referred offset is non-PTAT, the proposed amplifier realizes a PTAT offset that can be removed easily through a single room-temperature trim at R_{T} (see Fig. 3). This greatly simplifies the circuit structure, since the complicated offset cancellation technique, such as chopping or autozeroing, is no longer needed. The notch filter and huge miller capacitor are no longer needed either. Second, it uses a new technique to generate the amplifier bias current by using a tail resistor only. Since the extra biasing circuit is no longer needed, the circuit structure is further simplified. Third, the proposed bandgap reference circuit improves the power supply rejection ratio (PSRR) through a special feedback loop. As a result, the PSRR is as large as −78 dB, even without using a cascode amplifier. The principle of the proposed circuit is discussed in the following in detail.

A. Proposed Amplifier With PTAT Offset

As mentioned before, the reference voltage V_{BG} has a linear relationship with the amplifier offset V_{OS} [see (2)]. This means that, as long as the amplifier offset V_{OS} is PTAT, its error in V_{BG} will be PTAT as well. This PTAT error can be easily removed through a single room-temperature trim at R_{T}.

The proposed PTAT offset V_{OS} of amplifier is based on the I–V relationship in BJT transistor (the following formula is reported in [5]):

$$V_{\mathrm{BE}}(\mathrm{T}) = V_G(\mathrm{T}) - \frac{\mathrm{T}}{\mathrm{T}_r}V_G(\mathrm{T}_r) + \frac{\mathrm{T}}{\mathrm{T}_r}V_{\mathrm{BE}}(\mathrm{T}_r) - \eta\frac{kT}{q}\ln\left(\frac{\mathrm{T}}{\mathrm{T}_r}\right) + \frac{kT}{q}\ln\left[\frac{I_C(\mathrm{T})}{I_C(\mathrm{T}_r)}\right] \tag{3}$$

where V_G is the silicon bandgap, T is the absolute temperature, T_r is a chosen reference temperature, η is a parameter dependent on process, and I_C is the collector current of BJT transistor.

The amplifier offset depends on the transistor mismatches. In the proposed amplifier, the input pair is the BJT transistors Q_3 and Q_4, while its current mirror is the BJT transistors Q_5 and Q_7 (see Fig. 4). Due to this reason, the amplifier offset comes from the mismatch between Q_3 and Q_4 and the mismatch between Q_5 and Q_7.

Let us look at Q_5 and Q_7 first. Q_5 and Q_7 have the same base–emitter voltage V_{BE}, but, due to mismatch, they could have different collector currents I_C. Under this circumstance, in (3), Q_5 and Q_7 have different $I_C(\mathrm{T})$ and different $I_C(\mathrm{T}_r)$, while other parameters in (3) are the same. Therefore, using (3), we can derive that

$$\frac{I_{C5}(\mathrm{T})}{I_{C5}(\mathrm{T}_r)} = \frac{I_{C7}(\mathrm{T})}{I_{C7}(\mathrm{T}_r)}. \tag{4}$$

The currents of Q_5 and Q_7 flow into Q_3 and Q_4, respectively (they are connected in series in Fig. 4). Thus, we have $I_{C5} = I_{C3}$ and $I_{C7} = I_{C4}$. Due to this reason, (4) can be rewritten as follows:

$$\frac{I_{C3}(\mathrm{T})}{I_{C3}(\mathrm{T}_r)} = \frac{I_{C4}(\mathrm{T})}{I_{C4}(\mathrm{T}_r)}. \tag{5}$$

Then, let us look at Q_3 and Q_4. Due to mismatch, Q_3 and Q_4 could have different base–emitter voltage V_{BE} and different collector currents I_C. This means that, in (3), Q_3 and Q_4 could have different $V_{\mathrm{BE}}(\mathrm{T})$, different $V_{\mathrm{BE}}(\mathrm{T}_r)$, different $I_C(\mathrm{T})$, and different $I_C(\mathrm{T}_r)$, while other parameters in (3) are the same. Under this circumstance, using (3)–(5), we have

$$V_{\mathrm{BE3}}(\mathrm{T}) - V_{\mathrm{BE4}}(\mathrm{T}) = \frac{\mathrm{T}}{\mathrm{T}_r}[V_{\mathrm{BE3}}(\mathrm{T}_r) - V_{\mathrm{BE4}}(\mathrm{T}_r)]. \tag{6}$$

In the above equation, the left-hand side is the differential input voltage of amplifier (see Fig. 4), while the right-hand side is a PTAT voltage. This demonstrates that the proposed amplifier has a PTAT offset V_{OS}.

Finally, let us look at some design considerations in the proposed amplifier. In Fig. 4, we cannot use a diode-connected Q_5 to generate the base voltage of Q_5 and Q_7. This is because, with a diode connected Q_5, the base current will flow into the collector node. This influences the accuracy of (5)–(6), which makes the amplifier offset V_{OS} no longer accurately PTAT. Especially, the base current of a BJT transistor is usually non-PTAT due to the non-PTAT current gain β. This non-PTAT component is not suitable for generating the PTAT amplifier offset V_{OS}.

In our design, we do not use a diode-connected Q_5. Instead, we use an extra M_6 and Q_6 to generate the base voltage of Q_5 and Q_7 (see Fig. 4). Since the gate of MOSFET has a high impedance, the base current of Q_5 and Q_7 no longer flows into their collector node. This ensures the PTAT offset V_{OS} of amplifier.

Similarly, we use an extra M_8 and Q_8 in Fig. 4. This is also necessary, as it ensures the same collector voltages between Q_5 and Q_7. Since Q_5 and Q_7 have limited output resistance, these same collector voltages are important in order to realize a good current matching between Q_5 and Q_7. As can be seen in Fig. 4, both Q_5 and Q_7 have a collector voltage of $V_{\mathrm{DD}} - V_{\mathrm{BE6,8}} - V_{\mathrm{GS6,8}}$. As long as $V_{\mathrm{BE6}} = V_{\mathrm{BE8}}$ and $V_{\mathrm{GS6}} = V_{\mathrm{GS8}}$, the collector voltages of Q_5 and Q_7 can be the same, which is desirable.

Here, $V_{\mathrm{BE6}} = V_{\mathrm{BE8}}$ and $V_{\mathrm{GS6}} = V_{\mathrm{GS8}}$ can be realized through the same current between Q_6 and Q_8 and the same current between M_6 and M_8. However, such a current matching may be hard to realize directly. Instead, in our design, we realize this current matching through the current matching between $Q_{5,7}$ and Q_0 (see Figs. 3 and 4). This is a good idea, since it makes the current matching easy to realize. Specifically,

Authorized licensed use limited to: Tsinghua University. Downloaded on February 12,2026 at 08:04:14 UTC from IEEE Xplore. Restrictions apply.

we can notice that the current on $Q_{5,7}$ is a copy of Q_6 through a current mirror, and the current on Q_0 is a copy of Q_8 through a current mirror. This makes it easy to understand why the current matching between Q_6 and Q_8 can be realized through the current matching between $Q_{5,7}$ and Q_0. In our design, we used a special biasing circuit to guarantee the current matching between $Q_{5,7}$ and Q_0. This special biasing circuit will be discussed later in detail.

Another advantage of the proposed amplifier is an improved PSRR. In Fig. 4, since the collector voltages of Q_5 and Q_7 are the same, the current matching between Q_5 and Q_7 is guaranteed. Also, this current matching is valid regardless of the V_{DD} variations. This leads to an excellent PSRR of −78 dB, according to simulation. Furthermore, this excellent PSRR is achieved without using a cascode amplifier. We have used only a simple amplifier to realize such a good PSRR. This helps simplify the circuit structure.

B. Amplifier Biasing Circuit With a Tail Resistor

This article proposes a simple biasing circuit for the amplifier. Different from the traditional biasing circuit that is complicated, the proposed biasing circuit is as simple as only one resistor. This helps simplify the circuit structure and makes the circuit easy to design.

Fig. 4 shows the proposed biasing circuit in the amplifier. Here, the resistor R_4 acts as the biasing circuit. It seems similar to the classic resistor-based biasing circuit. Nevertheless, they are actually different. The classic resistor-based biasing can only generate a biasing current that is sensitive to process variations. By contrast, the proposed biasing circuit in this work can generate a biasing current that is in-sensitive to process variations. This in-sensitivity to process variations is realized through the well-designed device sizes as well as the special topology in this work.

Specifically, the basic idea of the proposed biasing circuit is similar to the resistor R_2 in Fig. 3. In Fig. 3, the currents on Q_1 and Q_2 are equal, due to the amplifier clamp. As a result, the current on R_2 is as follows:

$$I_{R2} = \frac{V_T \ln N}{R_2}. \tag{7}$$

The characteristic of R_4 is similar to R_2. They have a similar characteristic, because their topologies are the same. Specifically, the structure of R_4 and $Q_{3,4}$ is in parallel with Q_1, and the structure of R_2 and Q_2 is also in parallel with Q_1. From this perspective, since they have the same topologies, if they also have the same device sizes, then their currents will be the same as well. In this way, the current on R_4 can be determined. This realizes the function of biasing circuit for the amplifier, and the realized biasing current I_{R4} is accurately proportional to I_{R2}. More importantly, this proportion relationship is in-sensitive to process variations.

In our design, for saving area, we actually do not use the same sizes for $Q_{3,4}$ and Q_2, since BJT transistor occupies a huge area. Instead, we design $Q_{3,4}$ to have the smallest possible size ($m = M$ each) in our design (see Fig. 4). Under this circumstance, since the size of $Q_{3,4}$ is changed to a new value (no longer equal to Q_2), the size of R_4 must also be changed to a new value as well.

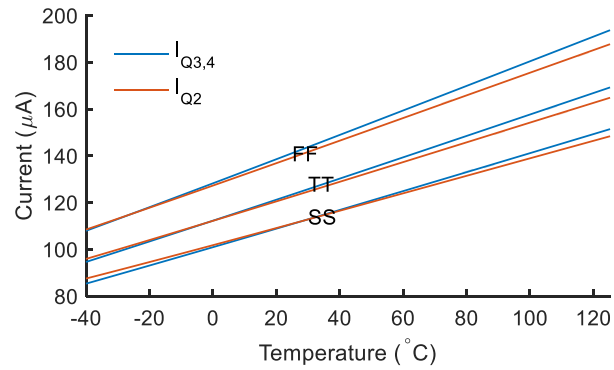

Fig. 6. Currents on $Q_{3,4}$ and Q_2. These currents match with each other, even under different process corners.

To determine the value of R_4, we need to consider how large a biasing current is required for the amplifier, since R_4 acts as the biasing circuit. Here, as an example, our goal is to set the current on R_4 to be twice the current on R_2 as follows:

$$I_{R4} = 2 \cdot I_{R2}. \tag{8}$$

Now, in (7), we already know the expression of I_{R2} in terms of R_2. Similarly, we also want to know the expression of I_{R4} in terms of R_4. To this end, we can learn from the expression of I_{R2} in order to get the expression of I_{R4}. Here, we learn from it, because I_{R2} and I_{R4} have the same circuit topology, voltage, and current. Specifically, they have the same circuit topology, because R_2 is in series with a transistor Q_2, and R_4 is also in series with a transistor $Q_{3,4}$. Meanwhile, they have the same voltage, since the total voltage of R_2 and Q_2 is the same as the total voltage of R_4 and $Q_{3,4}$. What is more, they have the same current, as the current on Q_2 is the same as the current on Q_3 or Q_4. Due to this reason, we finally obtain the expression of I_{R4} in terms of R_4 as follows:

$$I_{R4} = \frac{V_T \ln M}{R_4}. \tag{9}$$

Combining (7)–(9), we obtain the value of R_4 as follows:

$$R_4 = \frac{R_2}{2} \cdot \frac{\ln M}{\ln N}. \tag{10}$$

This equation is useful, since it is helpful for us in designing the proposed biasing circuit.

Overall, the proposed biasing circuit is as simple as only one resistor. This helps reduce the circuit complexity effectively. What is more, it realizes a biasing current that is in-sensitive to process variations. This is advantageous when compared to the classic resistor-based biasing circuit.

C. Simulation Results

Designed in a 180-nm process, Figs. 6–9 show the simulated performance of the proposed bandgap reference.

Among them, Fig. 6 shows the currents on $Q_{3,4}$ and Q_2 versus temperature. Due to the proposed biasing circuit, the two currents match very well, even under different process

Authorized licensed use limited to: Tsinghua University. Downloaded on February 12,2026 at 08:04:14 UTC from IEEE Xplore. Restrictions apply.

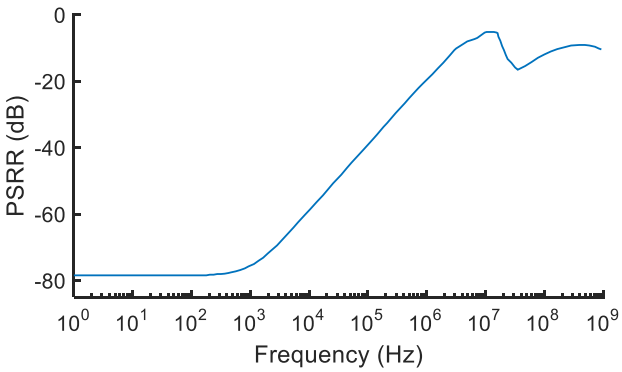

Fig. 7. PSRR of the proposed bandgap reference circuit.

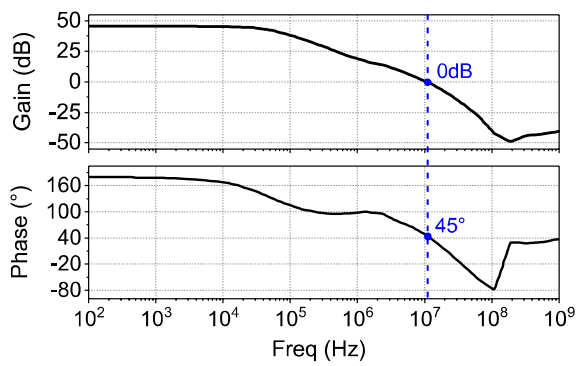

Fig. 8. Stability analysis of the proposed bandgap reference circuit.

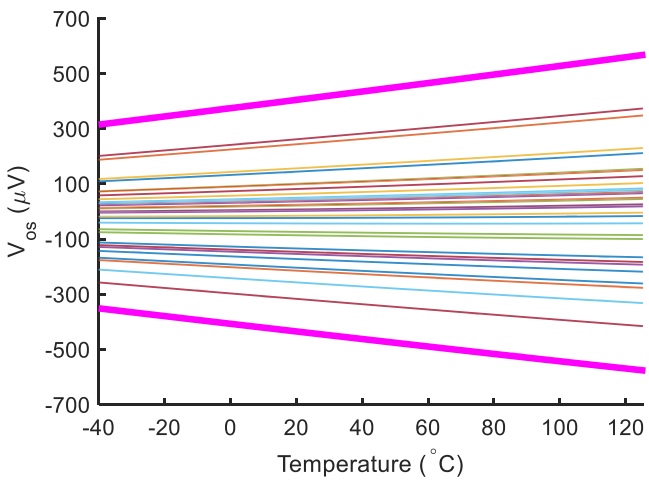

Fig. 9. Proposed amplifier offset voltage V_{os}, which is PTAT. The bond lines indicate $\pm 3\sigma$ curves.

corners. This demonstrates the effectiveness of the biasing circuit.

Fig. 7 shows the PSRR of the proposed bandgap reference circuit. Without using a cascode amplifier, the PSRR is as high as -78 dB at low frequency. This good performance comes from the matching between the Q_5 and Q_7 collector voltages in the amplifier (see Fig. 4).

Fig. 8 shows the stability analysis of the proposed bandgap reference circuit. Its phase margin is 45°, and its dc gain is 45 dB at low frequency.

Fig. 9 shows the proposed amplifier offset voltage V_{os} under a 30-point Monte-Carlo simulation (process + mismatch).

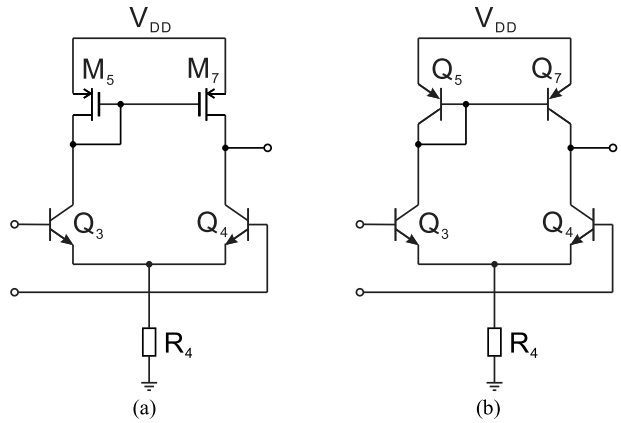

Fig. 10. Classic amplifier with (a) MOS transistor load and (b) BJT transistor load.

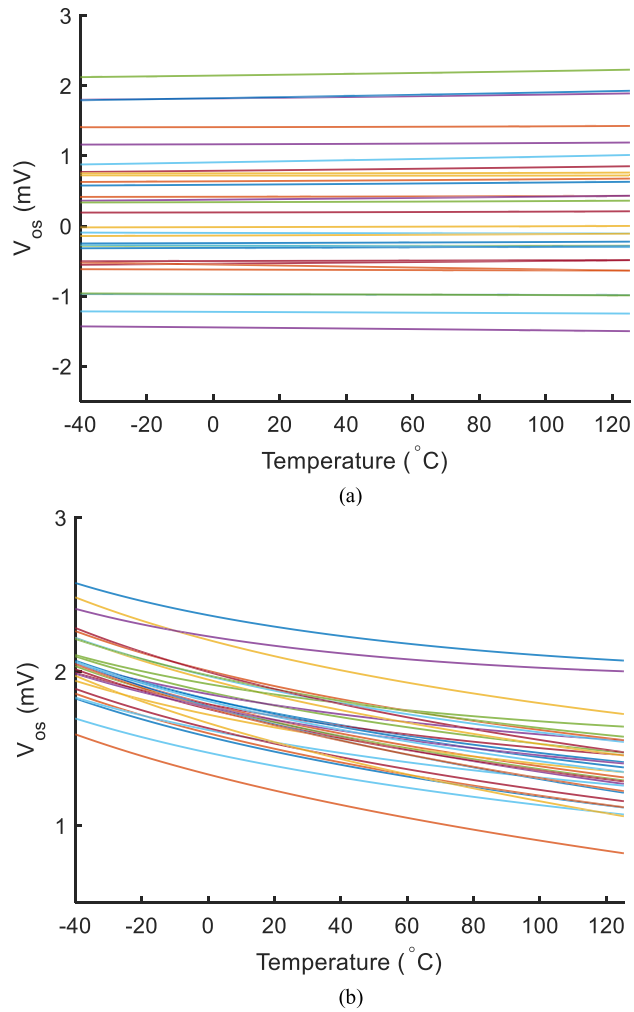

Fig. 11. Classic amplifier offset voltage V_{os} of (a) Fig. 10(a) and (b) Fig. 10(b), which are non-PTAT.

As can be seen, the offset voltage V_{os} is PTAT, which matches well with the analysis before.

For easy comparison, Fig. 10(a) also shows a classic amplifier with a MOS transistor load, while Fig. 11(a) shows its offset voltage V_{os}. As can be seen, its offset voltage V_{os} is non-PTAT and it is as large as millivolt level. This undesired performance comes from the large and non-PTAT mismatches between the MOSFET M_5 and M_7 [see Fig. 10(a)].

Authorized licensed use limited to: Tsinghua University. Downloaded on February 12,2026 at 08:04:14 UTC from IEEE Xplore. Restrictions apply.

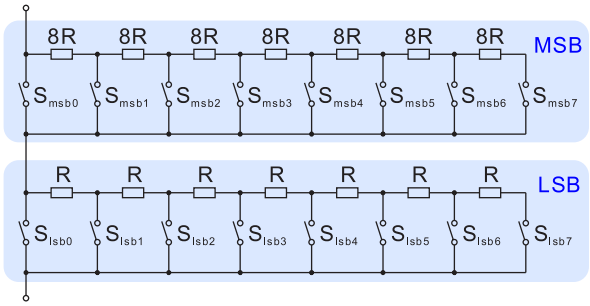

Fig. 12. Classic trimming circuit, where the switches occupy a huge area.

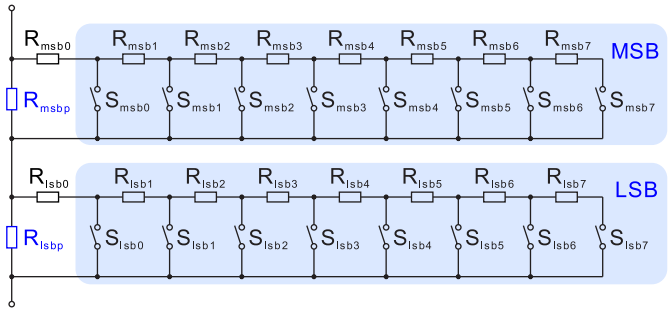

Fig. 13. Improved trimming circuit, where the switches occupy a much smaller area.

Similarly, Fig. 10(b) shows a classic amplifier with a BJT transistor load, while Fig. 11(b) shows its offset voltage V_{os}. As can be seen, the offset voltage V_{os} is non-PTAT and is asymmetric around the horizontal axis. This asymmetric performance comes from the asymmetric current of the BJT transistor load in Fig. 10(b) due to the undesired base current.

In order to show the curvature in amplifier offset voltage V_{os}, we calculate the R^2 value (coefficient of determination) of V_{os} curves. The average R^2 value of Fig. 9 is 0.990, while the average R^2 values of Fig. 11(a) and (b) are 0.982 and 0.976, respectively. This means that the proposed amplifier offset voltage V_{os} has a better linearity compared to the classic amplifiers. This is another advantage of this work.

IV. Improved Trimming Circuit

As mentioned before, the proposed bandgap reference circuit is based on a single room-temperature trim. Specifically, as in Fig. 3, the trimmable resistor is R_T.

Fig. 12 shows a classic trimming scheme. Here, the trimming circuit consists of both MSB and LSB parts, each of which contains eight switches. In each part (MSB or LSB part), only one of the eight switches should be turned on at any moment. This trimming scheme provides $8 \times 8 = 64$ trimming steps in total.

The classic trimming scheme in Fig. 12 has a drawback that the switches occupy a huge area. This huge area comes from the requirement on the trimming accuracy [2]. For example, if the unit resistor R in Fig. 12 is 30 Ω, the ON-resistance of each switch should be as small as 3 Ω, in order to ensure the trimming accuracy. This tight requirement on the switch ON-resistance leads to a huge MOS transistor size. Considering a PMOS that acts as the switch, each switch is as large as 2500 μm^2 in a 180-nm process, and all the 16 switches in Fig. 12 occupy $2500 \times 16 = 40\,000$ μm^2 in total.

To save area, this article uses an improved version of trimming scheme in Fig. 13. Compared with the classic version, two extra resistors R_{msbp} and R_{lsbp} are added, which are in parallel with the MSB and LSB parts, respectively. These newly added resistors are useful for increasing the resistance of the unit resistors $R_{msb1\sim7}$ and $R_{lsb1\sim7}$, since it can be regarded as a total resistance divided into two large resistors in parallel. This is helpful, since, at this moment, we no longer need to worry about the huge area of switches. Instead, we can use a small switch size, because the switch ON-resistance is already relatively smaller compared with the large unit resistors.

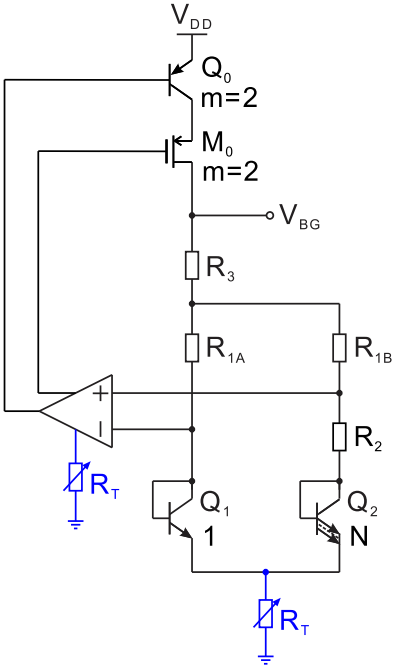

Fig. 14. Final version of the proposed bandgap reference circuit, where the trimming circuit R_T is moved to the bottom.

Besides, although the size of unit resistors is increased (mentioned above), the total area is dominated by the switches. Designed in a 180-nm process, the area of switches is 6024 μm^2, while the area of unit resistors is 5041 μm^2. Compared with the classic trimming scheme, we save the total area by four times.

Another way to reduce the switch sizes is to move the trimming circuit to the bottom of the bandgap reference circuit. As shown in Fig. 14, we move the resistor R_T to the bottom of the entire circuit. Since R_T is at the bottom, the trimming circuit can use NMOS switches (instead of PMOS switches). This is advantageous, since the electron mobility of NMOS is 2–3 times larger than the hole mobility. This is not like the prior work of Fig. 1. In Fig. 1, because the resistor R_T is located at V_{BG}, the trimming circuit can only use PMOS switches, since the supply voltage of 1.8 V can hardly turn on the NMOS switches at V_{BG}. By contrast, in our work, with the resistor R_T at the bottom, the 1.8-V supply can easily turn on the NMOS switches. Taking advantage of these NMOS switches, our switch sizes can be reduced further due to the stronger electron mobility of NMOS.

Authorized licensed use limited to: Tsinghua University. Downloaded on February 12,2026 at 08:04:14 UTC from IEEE Xplore. Restrictions apply.

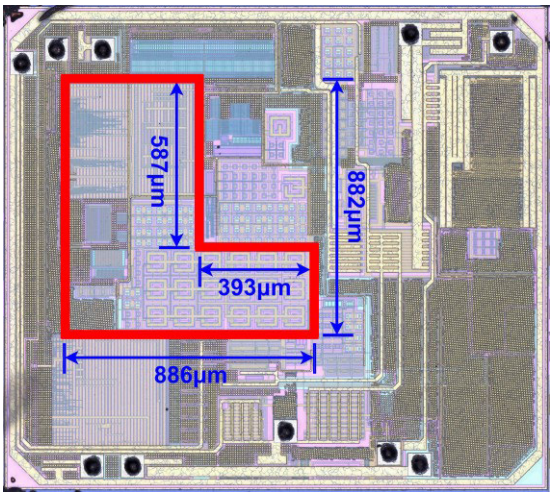

Fig. 15. Chip micrograph.

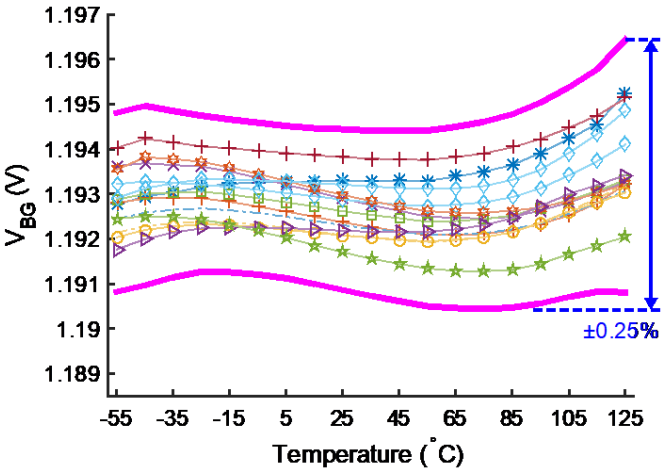

Fig. 16. V_{BG} versus temperature before trim. The bond lines indicate $\pm 3\sigma$ curves.

What is more, the gate–source voltage of switches is also larger than the prior work of Fig. 1. As shown in Fig. 1, since it uses PMOS switches at V_{BG}, the gate–source voltage of PMOS switches is also V_{BG}. By contrast, in our design, because we use NMOS switches at the bottom, the gate–source voltage of switches is V_{DD}. This larger gate–source voltage effectively reduces the ON-resistance of switches, as the transistor ON-resistance is inversely proportional to the gate–source voltage. This helps further reduce the switch sizes.

V. Measurement Results

The proposed bandgap reference circuit is designed in a 180-nm BCD process. Fig. 15 shows the chip micrograph. It occupies an active area of 0.55 mm^2.

Fig. 16 shows the V_{BG} versus temperature before trimming. These results are measured from 13 chips. V_{BG} ranges from 1.1905 to 1.1965 V, and the 3-sigma inaccuracy is ±0.25%.

Fig. 17 shows the V_{BG} versus temperature after a single room-temperature trim. As can be seen, the single room-temperature trim reduces the errors effectively. It causes all the curves to be close to each other. As a result, the 3-sigma inaccuracy is as small as ±0.13%.

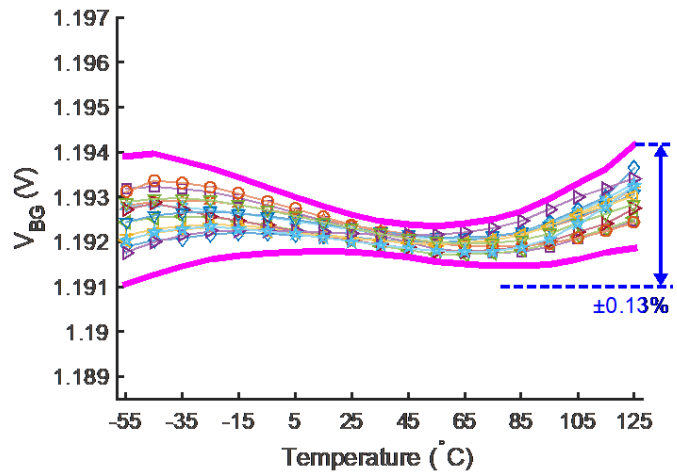

Fig. 17. V_{BG} versus temperature after a single room-temperature trim. The bond lines indicate $\pm 3\sigma$ curves.

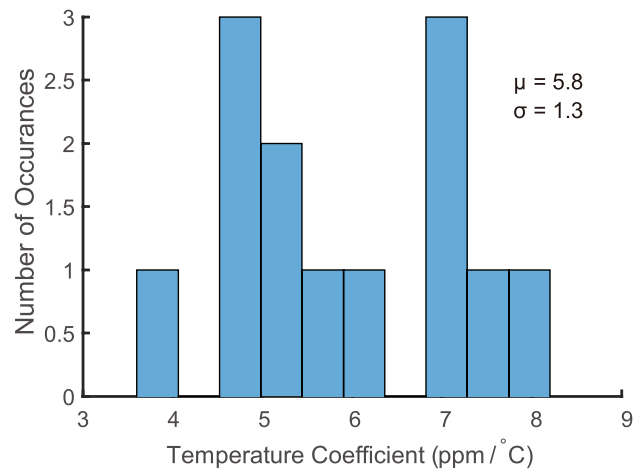

Fig. 18. Histogram of TC.

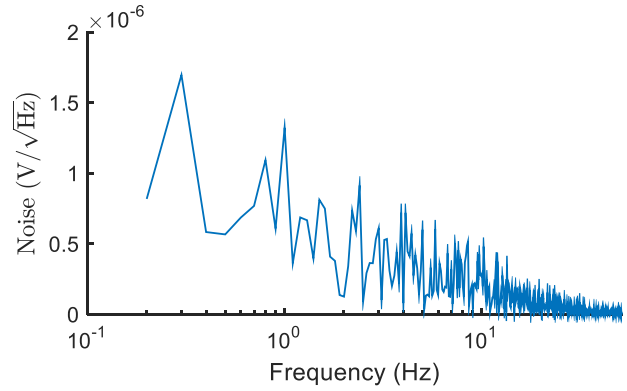

Fig. 19. Noise spectrum of V_{BG}.

Fig. 18 shows the histogram of TC of V_{BG}. It ranges from 3 to 8 ppm/°C. This small TC comes from the proposed PTAT offset of amplifier, which can be removed through a single room-temperature trim.

Fig. 19 shows the noise spectrum of V_{BG}. Its root mean squares (rms) noise is as small as 1.5 μV at 0.1–10 Hz. This advantage comes from the proposed BJT-based amplifier, since a BJT transistor has a lower flicker noise than a MOS

Authorized licensed use limited to: Tsinghua University. Downloaded on February 12,2026 at 08:04:14 UTC from IEEE Xplore. Restrictions apply.

TABLE II
PERFORMANCE COMPARISON WITH PRIOR WORKS

	This work	[1]	[3]	[6]	[7]	[16]
Technology	**0.18μm**	0.16μm	0.13μm	0.8μm	0.18μm	0.18μm
Supply Voltage	**3~5V**	1.8V±10%	-	5.2V	1.8V±10%	1.2V
Active Area	**0.55mm²**	0.12mm²	0.034mm² (not including trimming circuit)	0.28mm²	0.38mm²	0.036mm²
Bandgap Voltage	**1.192V**	1.088V	1.225V	3.65V	1.142V	0.767V
Temperature Range	**-55~125°C**	-40~125°C	-40~120°C	-40~110°C	-40~125°C	-40~120°C
Number of Samples	**13**	61	13	13	18	8
Inaccuracy (Trimmed)	**±0.13% (3σ)**	±0.15% (3σ)	±0.08% (3σ)	-	±0.07% (3σ)	-
TC (Trimmed)	**3~8ppm/°C**	5~12ppm/°C	<7ppm/°C	<3ppm/°C	3.2~5.5ppm/°C	3.4~6.9ppm/°C
Number of Trim	**Single Trim**	Single Trim	Single Trim	Single Trim	Single Trim	Three-Point Trim
No Need of Chopping	**Yes**	No	No	No	No	-
Current Consumption	**590μA**	55μA	-	750μA	17μA	36μA
Noise	**1.5μV (rms) (0.1~10Hz)**	6.1μV (rms) (0.1~10Hz)	-	14.8μV (rms) (0.1~10Hz)	56μV (rms)	-
PSRR	**-78dB@DC**	-74dB@DC	-	-127dB@DC	-76dB@DC	-67dB@DC
Line Sensitivity	**0.011%/V**	0.018%/V	-	0.000012%/V	0.014%/V	0.054%/V

transistor. Although the proposed amplifier also has MOS transistors, the MOS transistors are only used at high-impedance nodes, which do not contribute much noise.

Table II shows a comparison with prior works. The key highlight of this work is the no need of chopping for the amplifier offset. This chopping-free operation greatly reduces the circuit complexity and the output ripples. According to the best of our knowledge, this is the first chopping-free single-trim bandgap reference. Furthermore, this work has the smallest output noise (at least four times smaller) under a reasonable current consumption. This advantage comes from the proposed amplifier with BJT transistors. What is more, this work has a better TC than [1]. This advantage is because the proposed work can completely remove the amplifier offset error, while [1] cannot completely remove the amplifier offset even after chopping.

VI. CONCLUSION

This article proposes a chopping-free single-trim bandgap reference circuit. Since its amplifier offset voltage is PTAT, its offset error can be removed through a single room-temperature trim at the reference voltage. This makes the chopping no longer needed any more. This chopping-free technique helps reduce the circuit complexity. Meanwhile, this article proposes a special biasing circuit for the amplifier. It is as simple as only one resistor, which further simplifies the circuit structure. Finally, an improved trimming circuit is also used to save the chip area. Overall, compared to prior works, this work has the advantages of single trim, no need of chopping, simple structure, low noise, and high PSRR.

REFERENCES

[1] G. Ge, C. Zhang, G. Hoogzaad, and K. A. A. Makinwa, "A single-trim CMOS bandgap reference with a 3σ inaccuracy of ±0.15% from −40 °C to 125 °C," *IEEE J. Solid-State Circuits*, vol. 46, no. 11, pp. 2693–2701, Nov. 2011.

[2] G. Ge, "A precision bandgap reference in CMOS technology," M.S. thesis, Dept. Microelectron., Delft Univ. Technol., Delft, The Netherlands, 2009.

[3] G. Maderbacher et al., "A digitally assisted single-point-calibration CMOS bandgap voltage reference with a σ inaccuracy of ±0.08% for fuel-gauge applications," in *IEEE Int. Solid-State Circuits Conf. (ISSCC) Dig. Tech. Papers*, Feb. 2015, pp. 102–103.

[4] P. Li, N. Liu, and D. Chen, "A simple bandgap reference based on VGO extraction with single-temperature trimming," in *Proc. IEEE Int. Symp. Circuits Syst. (ISCAS)*, Oct. 2020, pp. 1–5.

[5] N. Liu, R. Geiger, and D. Chen, "Bandgap voltage VGO extraction with two-temperature trimming for designing sub-ppm/°C voltage references," in *Proc. IEEE Int. Symp. Circuits Syst. (ISCAS)*, May 2019, pp. 1–4.

[6] B. L. Hunter and W. E. Matthews, "A ±3 ppm/°C single-trim switched capacitor bandgap reference for battery monitoring applications," *IEEE Trans. Circuits Syst. I, Reg. Papers*, vol. 64, no. 4, pp. 777–786, Apr. 2017.

[7] J.-H. Boo et al., "A single-trim switched capacitor CMOS bandgap reference with a 3s inaccuracy of +0.02%, −0.12% for battery-monitoring applications," *IEEE J. Solid-State Circuits*, vol. 56, no. 4, pp. 1197–1206, Apr. 2021.

[8] V. B. Vulligaddala, R. Adusumalli, S. Singamala, and M. B. Srinivas, "A digitally calibrated bandgap reference with 0.06% error for low-side current sensing application," *IEEE J. Solid-State Circuits*, vol. 53, no. 10, pp. 2951–2957, Oct. 2018.

[9] S. Huang et al., "A sub-1 ppm/°C bandgap voltage reference with high-order temperature compensation in 0.18-μm CMOS process," *IEEE Trans. Circuits Syst. I, Reg. Papers*, vol. 69, no. 4, pp. 1408–1416, Apr. 2022.

[10] U. Chi-Wa, M.-K. Law, C.-S. Lam, and R. P. Martins, "Auto-calibration technique for current-based bandgap voltage reference," in *Proc. IEEE Asian Solid-State Circuits Conf. (A-SSCC)*, Nov. 2021, pp. 1–3.

[11] L. Liu, X. Liao, and J. Mu, "A 3.6 μV_{rms} noise, 3 ppm/°C TC bandgap reference with offset/noise suppression and five-piece linear compensation," *IEEE Trans. Circuits Syst. I, Reg. Papers*, vol. 66, no. 10, pp. 3786–3796, Oct. 2019.

[12] U. Kamath et al., "A 1-V bandgap reference in 7-nm FinFET with a programmable temperature coefficient and inaccuracy of ±0.2% from −45 °C to 125 °C," *IEEE J. Solid-State Circuits*, vol. 54, no. 7, pp. 1830–1840, Jul. 2019.

[13] G. Zhu, Y. Yang, and Q. Zhang, "A 4.6-ppm/°C high-order curvature compensated bandgap reference for BMIC," *IEEE Trans. Circuits Syst. II, Exp. Briefs*, vol. 66, no. 9, pp. 1492–1496, Sep. 2019.

Authorized licensed use limited to: Tsinghua University. Downloaded on February 12,2026 at 08:04:14 UTC from IEEE Xplore. Restrictions apply.

[14] H. Luo, Q. Sun, R. Zhang, and H. Zhang, "A 1-V 3.1-ppm/°C 0.8-μW bandgap reference with piecewise exponential curvature compensation," in *Proc. IEEE Asian Solid-State Circuits Conf. (A-SSCC)*, Nov. 2018, pp. 97–98.

[15] R. Wang et al., "A sub-1ppm/°C current-mode CMOS bandgap reference with piecewise curvature compensation," *IEEE Trans. Circuits Syst. I, Reg. Papers*, vol. 65, no. 3, pp. 904–913, Mar. 2018.

[16] B. Ma and F. Yu, "A novel 1.2–V 4.5-ppm/°C curvature-compensated CMOS bandgap reference," *IEEE Trans. Circuits Syst. I, Reg. Papers*, vol. 61, no. 4, pp. 1026–1035, Apr. 2014.

Haoyu Zhuang received the B.S. and Ph.D. degrees from the School of Microelectronics, Xidian University, Xi'an, China, in 2010 and 2017, respectively.

He is currently an Associate Professor with the School of Integrated Circuit Science and Engineering, University of Electronic Science and Technology of China, Chengdu, China. Up to now, he has published approximately 40 articles in top journals and conferences, including IEEE JOURNAL OF SOLID-STATE CIRCUITS, VLSI Symposium, IEEE TRANSACTIONS ON CIRCUITS AND SYSTEMS—I: REGULAR PAPERS, IEEE TRANSACTIONS ON CIRCUITS AND SYSTEMS—II: EXPRESS BRIEFS, IEEE TRANSACTIONS ON VERY LARGE SCALE INTEGRATION, *Electronics Letters*, and so on. His research interests include analog and mixed-signal circuits, such as pipeline ADC, SAR ADC, voltage reference, and physically unclonable function.

Dr. Zhuang served/serves as a TPC member for IEEE ICTA, the Publicity Co-Chair for IEEE APCCAS, and an Associate Editor for *Electronics Letters*.

Yuntao Cao received the B.S. degree in integrated circuit design and integrated system from the University of Electronic Science and Technology of China (UESTC), Chengdu, China, in 2023, where he is currently pursuing the master's degree.

His current research interests include the analog circuit designs, such as sigma delta and noise shaping SAR analog-to-digital converters (ADCs), voltage references, and amplifiers.

Shuguang Han received the Ph.D. degree in circuit and system from the Department of Electronic Engineering, Tsinghua University, Beijing, China, in 2007.

From 2007 to 2021, he worked at Tongxin Microelectronics Company Ltd., Tsinghua Unigroup, Beijing, engaging in RF and analog chip design as well as research and development team management. He is currently employed with Beijing CIMO Microelectronics Company Ltd., Beijing, conducting research and development in analog chip technology. His primary research areas include development and reliability enhancement of radio frequency and analog integrated circuit.

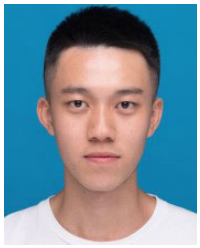

Siyuan Liu received the M.S. degree in integrated circuit engineering from the University of Electronic Science and Technology of China (UESTC), Chengdu, China, in 2022.

His current research interests include the low-power high precision analog circuit designs, such as voltage references, amplifiers, and data converters.

Yizhan Li received the B.S. degree in microelectronic science and technology from the University of Electronic Science and Technology of China (UESTC), Chengdu, China, in 2023, where he is currently pursuing the master's degree.

His current research interests include the analog circuit designs, such as energy-efficient data converters, bandgap references, amplifiers, and low-dropout regulators.

Rongqing Sheng received the B.S. degree in electronic information engineering from Xidian University, Xi'an, China, in 2024. She is currently pursuing the M.S. degree with the University of Electronic Science and Technology of China (UESTC), Chengdu, China.

Her current research interests include voltage references and analog-to-digital converters (ADCs).

Qiang Li received the B.Eng. degree in electrical engineering from the Huazhong University of Science and Technology (HUST), Wuhan, China, in 2001, and the Ph.D. degree in electronic engineering from Nanyang Technological University (NTU), Singapore, in 2007.

From 2006 to 2009, he was a Design Engineer, the Project Leader and Technical Consultant at the Institute of Microelectronics (IME), Singapore, and OKI Techno Centre (Singapore) Pte Ltd., Singapore, respectively. He joined the University of Electronic Science and Technology of China (UESTC), Chengdu, China, in 2009, where he has been a Full Professor and the Founding Head of the UESTC Institute of Integrated Circuits and Systems. He joined Hamburg University of Technology (TUHH), Hamburg, Germany, in 2025, where he holds a W3 Professorship and Chair of Integrated Circuits and Systems. His research interests include low-voltage and low-power analog/RF circuits, data converters, mixed-mode circuits for biomedical and sensor interfaces, and analog computing.

Prof. Li served/serves as a member for the Technical Program Committee of a series of international conferences, including ISSCC, CICC, ASSCC, ESSCIRC, and the TPC Chair of APCCAS'2018. He was a Co-Founder of ICAC, a premier forum in IC advances in China. He was the Distinguished Lecturer of the IEEE Solid-State Circuits Society (SSCS) and on the Board of Governors (BoG) of IEEE Circuits and Systems Society (CASS).

Authorized licensed use limited to: Tsinghua University. Downloaded on February 12,2026 at 08:04:14 UTC from IEEE Xplore. Restrictions apply.