A Novel Gate-to-Source ESD Protection Clamp for GaN HEMT

Yijun Shi, Yiqiang Chen, *Member, IEEE*, Yun Huang, *Member, IEEE*, Zhiyuan He, Wanjun Chen, *Senior Member, IEEE*, Ruize Sun, Bin Yao, Hongyue Wang, Qingzhong Xiao, Guoguang Lu, and Bo Zhang, *Senior Member, IEEE*

***Abstract*— In this work, a novel GaN electrostatic discharge (ESD) protection clamp is proposed for enhancing the gate structure's ESD reliability of the conventional (Con.) p-GaN high-electron-mobility transistor (HEMT). The proposed clamp features a floating p-GaN structure and a pF-grade capacitor, which is in parallel connection between the anode electrode and the floating p-GaN structure (C_{GA}). It is demonstrated that the proposed clamp not only possesses a low triggering voltage (V_t < 10 V) but also can withstand a relatively high second breakdown current (I_s~6 A) in the transient ESD event. Hence, the proposed clamp can usefully discharge the transient electrostatic charges accumulated at the gate structure of the Con. *E*-mode p-GaN HEMT and clamp its potential at a low value, thereby enhancing its ESD reliability and avoiding the gate-to-source ESD damage. It is also found that the clamp's V_t and I_s have a strong correlation with C_{GA}. Thus, through changing C_{GA}, the clamp will possess the desired V_t and I_s's. In addition, the proposed clamp can be fabricated on the Con. *E*-mode p-GaN HEMT platform, making the HEMT's ESD design more convenient.**

***Index Terms*— Electrostatic discharge (ESD) protection clamp, gallium nitride (GaN) high-electron-mobility transistor (HEMT), human body model (HBM) failure voltage, secondary breakdown current, transmission line pulsing (TLP).**

Manuscript received December 12, 2021; revised February 24, 2022 and April 13, 2022; accepted April 28, 2022. Date of publication May 16, 2022; date of current version June 21, 2022. This work was supported in part by the National Natural Science Foundation of China (NSFC) under Grant 62004046, in part by the Key-Area Research and Development Program of Guangdong Province under Grant 2020B010173001, and in part by the Basic Scientific Research Projects in Guangzhou under Grant 202102020317. The review of this article was arranged by Editor C. Duvvury. *(Corresponding authors: Yiqiang Chen; Hongyue Wang.)*

Yijun Shi, Yiqiang Chen, Yun Huang, Zhiyuan He, Bin Yao, Hongyue Wang, Qingzhong Xiao, and Guoguang Lu are with China Electronic Product Reliability and Environmental Testing Research Institute, Guangzhou 510610, China (e-mail: yiqiang-chen@hotmail.com; wanghongyue@ceprei.com).

Wanjun Chen and Ruize Sun are with the State Key Laboratory of Electronic Thin Films and Integrated Devices, University of Electronic Science and Technology of China, Chengdu 610054, China.

Bo Zhang is with the China Electronic Product Reliability and Environmental Testing Research Institute, Guangzhou 510610, China, and also with the State Key Laboratory of Electronic Thin Films and Integrated Devices, University of Electronic Science and Technology of China, Chengdu 610054, China.

Color versions of one or more figures in this article are available at https://doi.org/10.1109/TED.2022.3172057.

Digital Object Identifier 10.1109/TED.2022.3172057

I. Introduction

At present, gallium nitride (GaN) high-electron-mobility transistors (HEMTs) have gained more and more attention in the field of power electronics applications, on account of their high critical breakdown field strength, high electron saturation velocity, high temperature capability, and low specific ON-resistance [1]–[6]. However, some GaN-based HEMTs still face the menace from the electrical fast transient event (namely, the electrostatic discharge (ESD) event), especially in the gate-to-source conditions. In some studies [7]–[9], the ESD reliability of the normally-ON (or depletion-mode, *D*-mode) GaN-based HEMTs has been comprehensively investigated. Similar to the conventional (Con.) Si-based power metal–oxide–semiconductor (MOS) device, the drain electrode of the D-mode GaN-based HEMTs can endure extremely high transient ESD voltage. Meanwhile, due to the superior discharge capacity of the positive-biased metal/AlGaN Schottky barrier junction, the gate structure of the *D*-mode GaN-based HEMTs is also able to withstand extremely high transient ESD voltage.

Things have changed for the Con. normally-ON (or enhancement-mode, *E*-mode) p-GaN HEMTs. Because there is no effective discharge passageway in the gate structure of the Con. *E*-mode p-GaN HEMTs, it can be easily damaged by an ESD event, an electrical fast transient event, or an overvoltage event induced by the Miller effect [10]–[12]. For instance, because of the presence of the Miller capacitor, when driving the gate of the p-GaN HEMTs by pulse switching signal, a high overvoltage will be generated (similar to the transient ESD event), which may damage the gate structure of the Con. *E*-mode p-GaN HEMTs. Canato *et al.* [13], Chen *et al.* [14], and Xu *et al.* [15] (the coauthor of this work) have presented the gate structure's ESD degradation and failure mechanisms of the Con. *E*-mode p-GaN HEMTs, which is primarily dependent on the device gate's geometry and the trapping effect. Also, we have comprehensively investigated the human body model (HBM) ESD reliability of the existing *E*-mode p-GaN HEMTs [16]. It is found that the equivalent HBM failure voltage (V_{HBM}) of the device's drain electrode can accord with the industry benchmark (2 kV). However, the equivalent V_{HBM} of the device's gate structure is no more than 0.5 kV, and the value is far less than the industry benchmark. Therefore, it is necessary to improve

0018-9383 © 2022 IEEE. Personal use is permitted, but republication/redistribution requires IEEE permission.
See https://www.ieee.org/publications/rights/index.html for more information.

Authorized licensed use limited to: Tsinghua University. Downloaded on February 12,2026 at 06:02:27 UTC from IEEE Xplore. Restrictions apply.

the gate structure's ESD reliability for the existing E-mode p-GaN HEMTs.

For accomplishing this goal, a novel GaN ESD protection clamp is proposed. The proposed clamp features a floating p-GaN structure and a pF-grade capacitor, which is in parallel connection between the anode electrode and the floating p-GaN structure (C_{GA}). It is demonstrated that the proposed clamp not only possesses a low triggering voltage ($V_t < 10$ V) but also can withstand a relatively high second breakdown current (I_s~6 A) in the transient ESD event, showing that the proposed clamp can usefully enhance the gate structure's ESD reliability and avoid the ESD damage for the Con. E-mode p-GaN HEMTs. This work is arranged as follows. The proposed clamp's structure and mechanism are exhibited in Section II. The TLP performance of the proposed clamp, and the influence of C_{GA} and the capacitor in parallel connection between the cathode electrode and floating p-GaN structure (C_{GC}) are studied in Section III. The conclusion of this work is given in Section IV.

II. Structure and Mechanism

Fig. 1(a) shows the structure of the proposed ESD clamp, which is similar to the Con. E-mode p-GaN HEMTs, except that the p-GaN structure of the proposed clamp is connected to the anode electrode through a pF-grade capacitor (called C_{GA}). The proposed clamp and similar structure can be fabricated on the Con. E-mode p-GaN HEMT platform and GaN MIS-HEMT platform, respectively (as shown in Figs. 2 and 3). Thus, the proposed ESD clamp could be readily integrated in the existing GaN technology, making the p-GaN HEMT's ESD design more convenient [Fig. 1(b)]. Also, the required C_{GA} can be readily integrated in the existing GaN technology by changing the capacitor's area. Namely, with the second passivation layer's thickness of 100 nm, to acquire an about 10-pF capacitor, the required capacitor's area is about 0.0144 mm^2 (120 μm × 120 μm), which occupies no more than 1‰ of the area of the Con. E-mode p-GaN HEMT in [17].

As also shown in Fig. 1(a), during the electrical fast transient event (namely, the ESD event), the rapidly changing voltage at the anode electrode (A) will lead to a capacitively coupled current from A to the other end [cathode electrode (C)]. The capacitively coupled current will bring a certain number of transient charges (Q_{tran}) to the floating p-GaN structure. The transient charges stored at the floating p-GaN structure will pull down its energy band, which will force the electrons to accumulate under the floating p-GaN region [16]. When the floating p-GaN structure's potential induced by the transient charges exceeds its threshold voltage (V_{th}), the channel under the floating p-GaN structure will be turned on. After that, a large number of transient ESD charges can be discharged through the proposed clamp. Thus, with the proposed GaN ESD protection clamp parallelly connected between the gate and source electrodes of the Con. E-mode p-GaN HEMTs [Fig. 1(b)], the ESD event-induced transient electrostatic charges at the device's gate electrode can be discharged through the proposed clamp, which could avoid

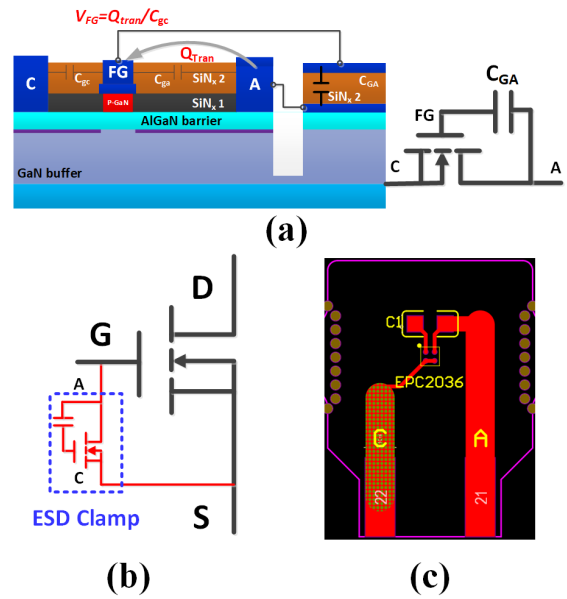

Fig. 1. (a) Structure of the proposed clamp, (b) reference of the p-GaN HEMT with the proposed clamp, and (c) equivalent structure made up of the p-GaN HEMT and capacitor [17].

the gate-to-source ESD damage for the Con. E-mode p-GaN HEMT, thereby enhancing the gate's ESD reliability.

Typically, in the transmission line pulsing (TLP) test, the voltage required to turn on the floating p-GaN structure (V_{on}) is positively correlated with $V_{th} \times C_{gc}/(C_{ga} + C_{GA})$ [16], where C_{gc} is the parasitic capacitance between the floating p-GaN structure and the cathode electrode and C_{ga} is the parasitic capacitance between the floating p-GaN structure and the anode electrode. The voltage required to turn on the floating p-GaN structure of the proposed clamps can be adjusted by changing the capacitor parallelly connected between the floating p-GaN structure and anode electrode or changing the parasitic capacitances between the floating p-GaN structure and the anode/cathode electrode.

For reducing the experimental cost, the equivalent structure made up of the capacitor and the E-mode p-GaN HEMTs from the Efficient Power Conversion Corporation [18] is employed to verify the proposed clamp's work principle [Fig. 1(c)]. As analyzed above, it can be seen that the characteristics of the proposed clamp have a strong correlation with the maximum transient current, the threshold voltage, and the parasitic capacitances (C_{gs}/C_{gd}) of the E-mode p-GaN HEMTs, which are 18 A, 2 V, and 75/10 pF, respectively. The other parameters of the Con. E-mode p-GaN HEMTs can be obtained from its datasheet [18]. In this study, our self-developed TLP measurement system is employed to produce the electrical fast transient event. The maximum positive/negative pulse voltage, rising time, and pulsewidth in TLP tests are set to be about 800/300 V, 2, and 100 ns, respectively. Meanwhile, the leakage measured at ±0.5 V is used as a failure criterion.

III. Results and Discussion

A. Results of the Proposed ESD Protection Clamp

Fig. 4 shows the leakage curves of the proposed clamps with different C_{GA}'s, accompanied by the GaN HEMTs with the

Authorized licensed use limited to: Tsinghua University. Downloaded on February 12,2026 at 06:02:27 UTC from IEEE Xplore. Restrictions apply.

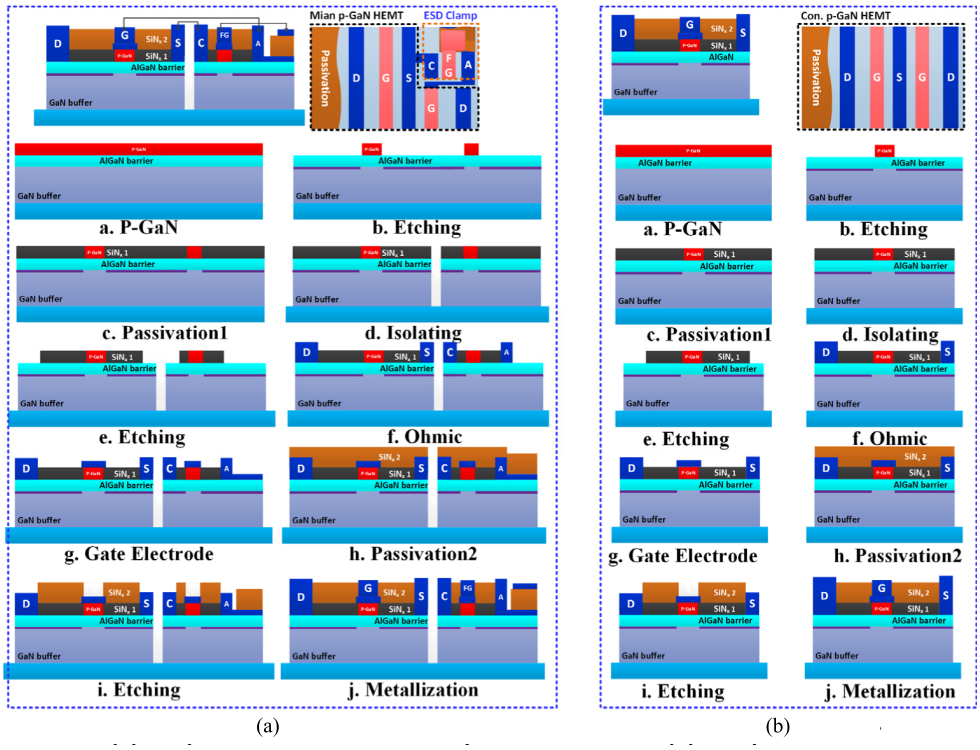

Fig. 2. Process flow of the p-GaN HEMT (a) with and (b) without proposed ESD clamp.

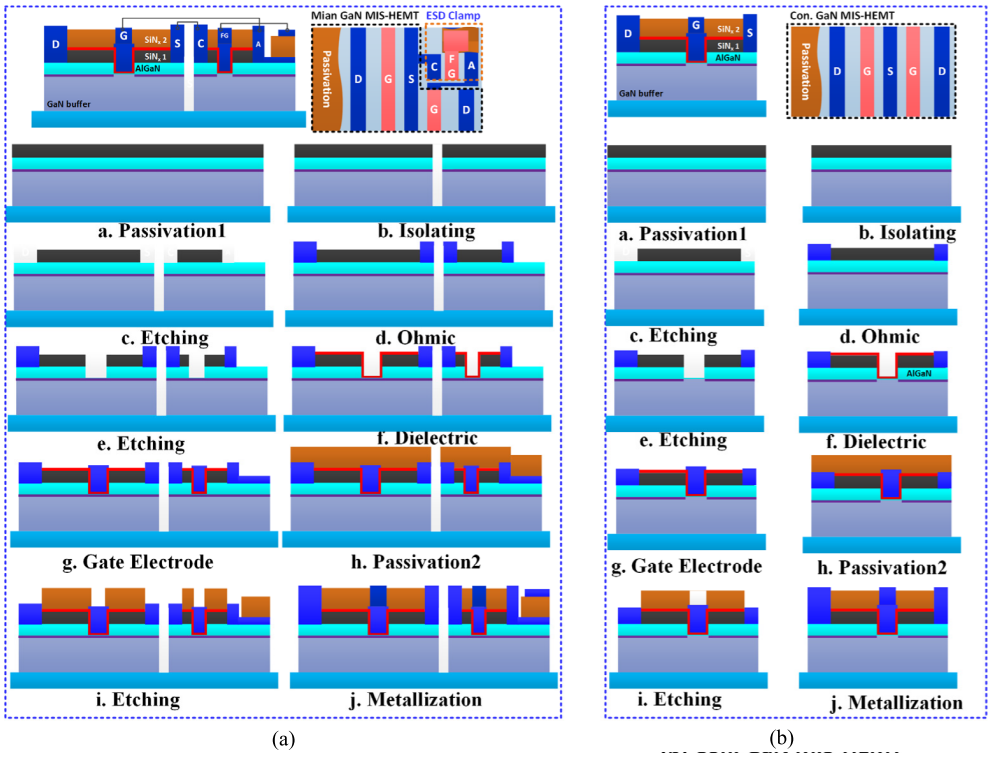

Fig. 3. Process flow of the GaN MIS-HEMT (a) with and (b) without similar ESD clamp.

gate electrode floated (called gate-floating clamp) or with the gate electrode shortly connected to the source electrode (called as GS-shorting clamp). The leakage of the proposed clamp is no more than 120 μA (at $V_{AC} = 6$ V). Up to present, the Con. E-mode p-GaN HEMT's gate leakage current is $\sim$100 μA [17]. For the Con. E-mode p-GaN HEMTs with a working current of 30 and 60 A, their gate leakage currents are 160 and 320 μA, respectively. Meanwhile, the Con. E-mode

Authorized licensed use limited to: Tsinghua University. Downloaded on February 12,2026 at 06:02:27 UTC from IEEE Xplore. Restrictions apply.

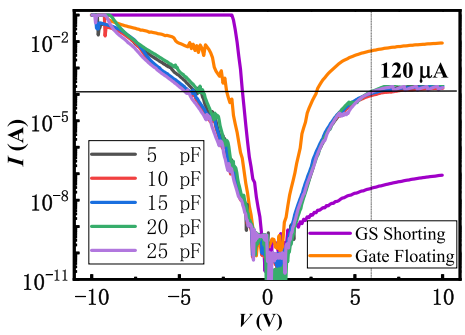

Fig. 4. Static leakage of the proposed clamp with different C_{GA}'s, accompanied by the gate-floating clamp and GS-shorting clamp.

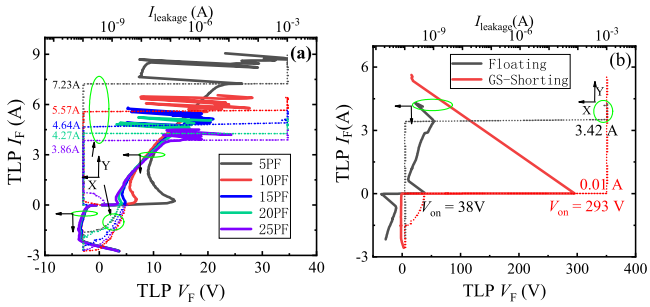

Fig. 5. (a) Bidirectional TLP *I–V* curves of the proposed clamp with different C_{GA}'s and (b) gate-floating clamp and GS-shorting clamp.

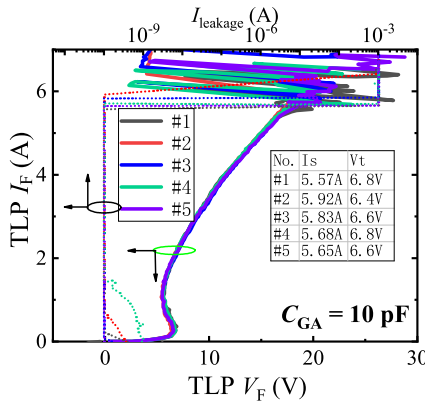

Fig. 6. Reproducibility of the proposed clamp with C_{GA} = 10 pF.

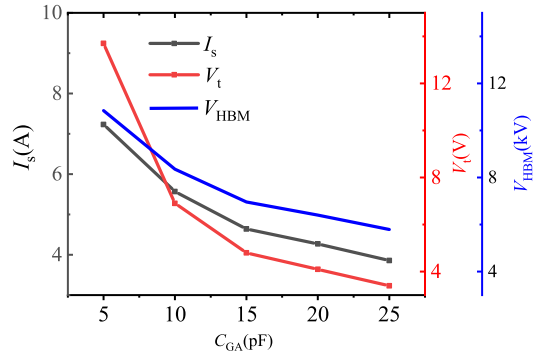

Fig. 7. I_S, V_t, and V_{HBM} of the proposed clamp with different C_{GA}'s.

p-GaN HEMTs with higher current will possess larger gate leakage. Thus, with the proposed clamp integrated into the Con. *E*-mode p-GaN HEMT, the device's gate leakage current will not be obviously increased. In addition, as mentioned above, the proposed clamp can be fabricated on the Con. *E*-mode p-GaN HEMT platform, making the HEMT's ESD design more accessible. However, the GS-shorting clamp and gate-floating clamp will be turned on with the applied voltage less than −2 V, both of which will obviously enlarge the reverse gate leakage of the Con. *E*-mode p-GaN HEMT with the devices integrated. In particular, the gate-floating clamp will also be turned on with the applied voltage reaching 4 V, and the value is less than the operating voltage of the Con. *E*-mode p-GaN HEMT. Thus, the gate-floating clamp is not suited as the ESD protection clamp.

Fig. 5 shows the TLP *I–V* curves of the proposed clamp, with that of the GS-shorting clamp and gate-floating clamp as a reference. In the positive test, the proposed clamp with C_{GA} of 10 pF is triggered at a low voltage of 6.8 V and possesses a high I_S of 5.6 A (@pulse voltage = 626 V), demonstrating that the proposed clamp can usefully discharge the transient electrostatic charges accumulated at the gate structure of the Con. *E*-mode p-GaN HEMT and clamp its potential at a low value, thereby enhancing its ESD reliability and avoiding the gate-to-source ESD damage. Besides, the proposed GaN ESD protection clamp also exhibits a high reverse I_s of 2.76A (@pulse voltage = −300 V), showing that the proposed clamp can also enhance the gate's ESD reliability for the Con. *E*-mode p-GaN HEMT during the reverse transient ESD event. Moreover, the proposed clamp with C_{GA} of 10 pF also exhibits good reproducibility (as shown in Fig. 6), demonstrating that the clamp may be suitable for industrial mass production.

Although the GS-shorting clamp has a high reverse I_s (larger than 3 A), the device's positive V_t reaches about 300 V, and the positive I_s is also low as 0.01 A. Thus, with the GS-shorting clamp integrated into the Con. *E*-mode p-GaN HEMT, the gate's potential of the Con. *E*-mode p-GaN HEMT cannot be clamped to be a demanded value during the electrical fast transient event. Also, low positive I_s cannot usefully discharge the accumulated transient electrostatic charges. Similarly, although the gate-floating clamp exhibits a relatively high positive I_s of 3.42 A, the high positive V_t of 38 V is much larger than the working voltage of the gate structure of the Con. *E*-mode p-GaN HEMT and will damage the HEMT's gate structure. Thus, both the GS-shorting clamp and gate-floating clamp are not suited as the ESD protection clamp to avoid the gate-to-source ESD damage and improve the gate's ESD reliability for the Con. *E*-mode p-GaN HEMT.

It can also be seen from Fig. 5 that the change in C_{GA} only has an obvious effect on the clamp's positive TLP *I–V* curves. Also, the influences of C_{GA} on the clamp's positive V_t and positive I_s are plotted in Fig. 7. As mentioned above, the positive V_t of the proposed clamp is decreased with the increase in C_{GA}. When C_{GA} is increased from 5 to 25 pF, the positive V_t is decreased from 13.8 to 3.4 V. Thus, through changing C_{GA}, a desirable positive V_t can be acquired for the proposed clamp. Also, to obtain a positive V_t of less than 6 V, C_{GA} of about 12 pF is needed. Similar to the

Authorized licensed use limited to: Tsinghua University. Downloaded on February 12,2026 at 06:02:27 UTC from IEEE Xplore. Restrictions apply.

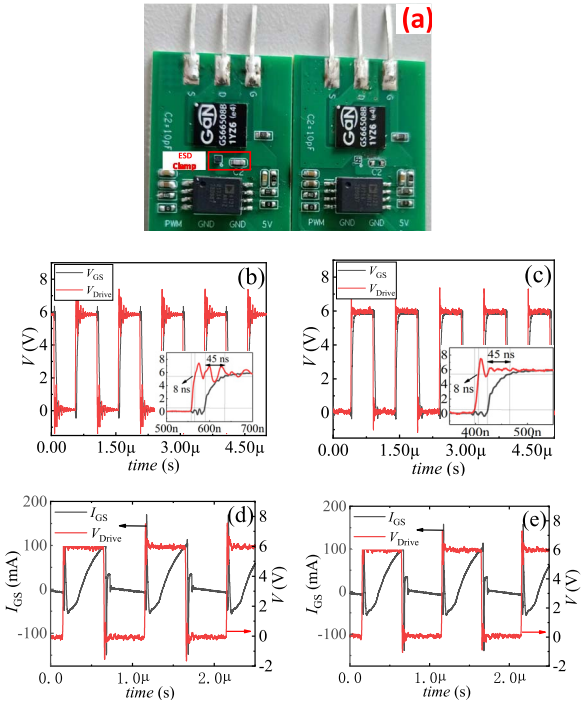

Fig. 8. (a) p-GaN HEMT with or without the proposed ESD clamp, (b) and (d) gate-to-source voltage and current (V_{GS} and I_{GS}) of the p-GaN HEMT with the proposed ESD clamp, and (c) and (e) gate-to-source voltage and current (V_{GS} and I_{GS}) of the p-GaN HEMT without the proposed ESD clamp.

positive V_t, the positive I_s of the proposed clamp is also decreased with the increase in C_{GA}. When C_{GA} is increased from 5 to 25 pF, the positive I_s is decreased from 7.23 to 3.86 A. Correspondingly, $V_{HBM}(= I_s \times 1500\ \Omega$, refer to [16]) of the proposed clamp is decreasing from 10.8 to 5.8 kV. In other words, although changing C_{GA} can regulate the positive V_t of the proposed clamp, which will also weaken the clamp's protection capability. The designers can refer to this characteristic and the manufacturing conditions of the corresponding manufacturers to carry out the device design. Fortunately, even with a high C_{GA} of 25 pF, V_{HBM} of the proposed clamp can accord with the industry benchmark (2 kV). Thus, the proposed clamp can work as an effective ESD protection clamp to avoid the gate-to-source ESD damage and improve the gate's ESD reliability for the Con. E-mode p-GaN HEMT.

Although the proposed approach will increase the p-GaN HEMT's gate-to-source capacitor by about 20 pF, this may not obviously affect the characteristic of the high-current and high-power p-GaN HEMT. For the p-GaN HEMT with a high current of 30 and 60 A [17], the gate-to-source capacitors are 240 and 510 pF, respectively. Meanwhile, the p-GaN HEMTs with higher current will possess higher gate-to-source capacitors. Thus, increasing the gate-to-source capacitor by about 20 pF may not obviously affect the switching characteristic of the high-current and high-power p-GaN HEMTs, as shown in Fig. 8. Also, as stated in Section I, to avoid the gate-to-source ESD damage and improve the gate's ESD reliability for the Con. E-mode p-GaN HEMT, the gate-to-source ESD protection clamp is needed in the circuit design. However, the capacitances of the most existing TVS diodes are higher than 20 pF. Also, because the proposed clamp can be fabricated on the Con. E-mode p-GaN HEMT platform and can be readily integrated in the chip of the Con. E-mode p-GaN HEMTs, which can further reduce the parasitic parameters in the GaN power system. Thus, the proposed GaN ESD protection clamp exhibits a good reference for the ESD design of p-GaN HEMTs.

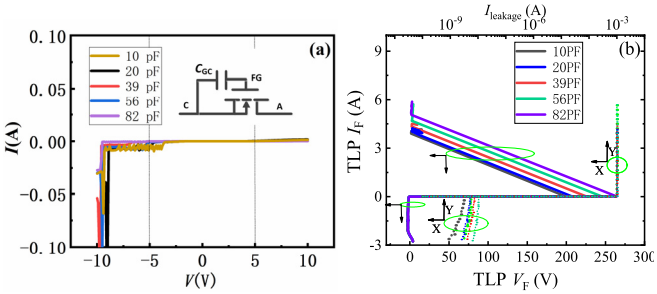

Fig. 9. (a) Leakage and (b) TLP I–V curves of Clamp 1 with different C_{GC}'s. (Inset: Fig. 7(a) shows the equivalent circuit of Clamp 1.)

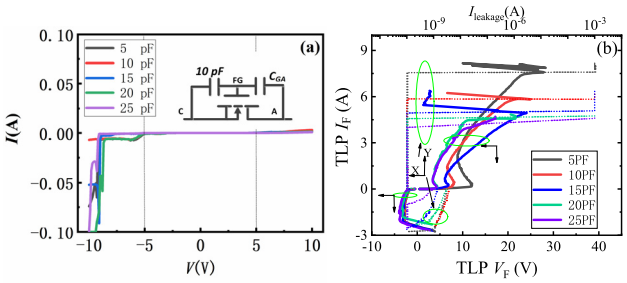

Fig. 10. (a) Leakage and (b) TLP I–V curves of Clamp 2 with different C_{GA}'s. (Inset: Fig. 10(a) shows the equivalent circuit of Clamp 2.)

B. Influence of C_{GC}

It is because C_{GC} may also influence the characteristics of the proposed clamps, the characteristics of the proposed clamps with different C_{GC}'s will also be investigated. At the first, the leakage and TLP I–V curves of the p-GaN HEMTs with the p-GaN structure connected to the cathode electrode through C_{GC} (called Clamp 1) are shown in Fig. 9. As it can be found in Fig. 9, although Clamp 1 exhibits a relatively low leakage, the device also possesses a high positive V_t over 200 V and an extremely low positive I_s of 0.01 A. That high positive V_t is far larger than the device's safe working voltage and will damage the device's gate structure. Also, the low positive I_s cannot usefully discharge the transient electrostatic charges accumulated at the gate of the Con. E-mode p-GaN HEMT. Thus, Clamp 1 is not suited as the ESD clamp to improve the gate structure's ESD reliability for the Con. E-mode p-GaN HEMT.

Figs. 10 and 11 show the leakage curves and TLP I–V curves of the proposed clamps with C_{GC} of 10 or 100 pF. For simplicity, the clamp with C_{GC} of 10 pF is called Clamp 2 [the inset of Fig. 10(a)] and the clamp with C_{GC} of 100 pF is called Clamp 3 [the inset of Fig. 11(a)]. It can be found in Fig. 10

Authorized licensed use limited to: Tsinghua University. Downloaded on February 12,2026 at 06:02:27 UTC from IEEE Xplore. Restrictions apply.

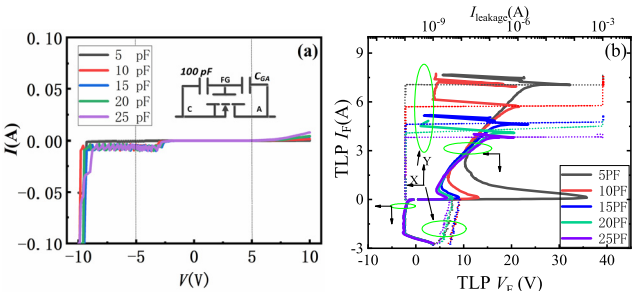

Fig. 11. (a) Leakage and (b) TLP I–V curves of Clamp 3 with different C_{GA}'s. (Inset: Fig. 11(a) shows the equivalent circuit of Clamp 3.)

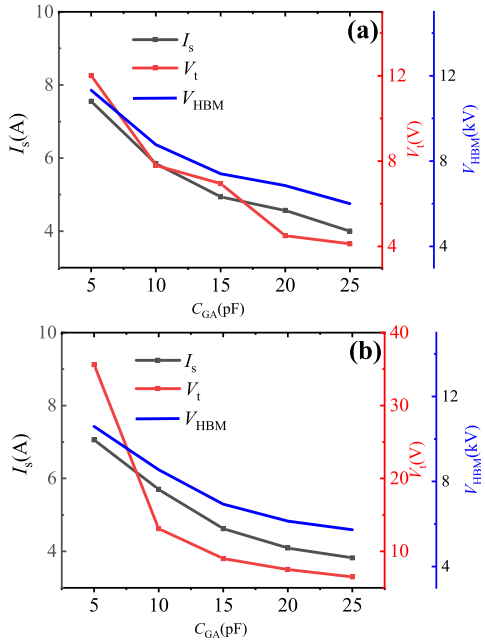

Fig. 12. I_S, V_t and V_{HBM} of (a) Clamp 2 and (b) Clamp 3 with different C_{GA}'s.

that V_t and I_s of Clamp 2 have a strong correlation with C_{GA}. With its capacitance enlarged from 5 to 25 pF, V_t of Clamp 2 is decreasing from 12.0 to 4.1 V, and I_s is decreasing from 7.55 to 4 A. Correspondingly, V_{HBM} of Clamp 2 is decreasing from 11.3 to 6 kV, as plotted in Fig. 12(a). Thus, the TLP I–V characteristics of Clamp 2 are similar to that of the proposed clamp without C_{GC}, indicating that Clamp 2 with an appropriate C_{GA} may also be suited as the ESD protection clamp for enhancing the gate structure's ESD reliability of the Con. E-mode p-GaN HEMT. However, compared with the proposed GaN ESD protection clamp, Clamp 2 may not be desired, because in the application of the Con. E-mode p-GaN HEMT, it should avoid increasing gate structure's capacitance as much as possible. Also, as it can be deduced in Fig. 11 that Clamp 3 may not be suited to protect the gate structure of the Con. E-mode p-GaN HEMT. It is because Clamp 3 possesses a relatively high positive triggering voltage, which may damage the device gate structure.

IV. Conclusion

In this work, a GaN ESD clamp featuring a floating p-GaN structure and a pF-grade capacitor is proposed for enhancing the gate structure's ESD reliability of the Con. E-mode p-GaN HEMT. Through the TLP test, it is demonstrated that the proposed clamp not only possesses a low V_t but also can withstand a high I_s. Also, it is found that the clamp's V_t and I_s have a strong correlation with C_{GA}. Thus, through changing C_{GA}, the clamp will possess the desired V_t and I_s's. In addition, the proposed clamp can be fabricated on the Con. E-mode p-GaN HEMT platform, making the HEMT's ESD design more convenient.

References

[1] K. J. Chen *et al.*, "GaN-on-Si power technology: Devices and applications," *IEEE Trans. Electron Devices*, vol. 64, no. 3, pp. 779–795, Mar. 2017, doi: 10.1109/TED.2017.2657579.

[2] N. Sun *et al.*, "Improving gate reliability of 6-in E-mode GaN-based MIS-HEMTs by employing mixed oxygen and fluorine plasma treatment," *IEEE Trans. Electron Devices*, vol. 69, no. 1, pp. 82–87, Jan. 2022, doi: 10.1109/TED.2021.3131118.

[3] F. Yang *et al.*, "Study of drain injected breakdown mechanisms in AlGaN/GaN-on-SiC HEMTs," *IEEE Trans. Electron Devices*, vol. 69, no. 2, pp. 525–530, Feb. 2022, doi: 10.1109/TED.2021.3138841.

[4] X. Wang *et al.*, "Effect of GaN channel layer thickness on DC and RF performance of GaN HEMTs with composite AlGaN/GaN buffer," *IEEE Trans. Electron Devices*, vol. 61, no. 5, pp. 1341–1346, May 2014, doi: 10.1109/TED.2014.2312232.

[5] J. A. del Alamo and E. S. Lee, "Stability and reliability of lateral GaN power field-effect transistors," *IEEE Trans. Electron Devices*, vol. 66, no. 11, pp. 4578–4590, Nov. 2019, doi: 10.1109/TED.2019.2931718.

[6] J. Wei, L. Zhang, Z. Zheng, W. Song, S. Yang, and K. J. Chen, "ON-resistance analysis of GaN reverse-conducting HEMT with distributive built-in SBD," *IEEE Trans. Electron Devices*, vol. 69, no. 2, pp. 644–649, Feb. 2022, doi: 10.1109/TED.2021.3133847.

[7] I. Rossetto *et al.*, "Demonstration of field-and power-dependent ESD failure in AlGaN/GaN RF HEMTs," *IEEE Trans. Electron Devices*, vol. 62, no. 9, pp. 2830–2836, Sep. 2015, doi: 10.1109/TED.2015.2463713.

[8] B. Shankar, S. Raghavan, and M. Shrivastava, "ESD reliability of AlGaN/GaN HEMT technology," *IEEE Trans. Electron Devices*, vol. 66, no. 9, pp. 3756–3763, Sep. 2019, doi: 10.1109/TED.2019.2926781.

[9] J. Kuzmík, D. Pogany, E. Gornik, P. Javorka, and P. Kordoš, "Electrostatic discharge effects in AlGaN/GaN high-electron-mobility transistors," *Appl. Phys. Lett.*, vol. 83, no. 22, pp. 4655–4657, Feb. 2003, doi: 10.1063/1.1633018.

[10] A. Volke and M. Hornkamp, *IGBT Modules Technologies, Driver and Application*. Munich, Germany: Infineon Technologies, 2012, ch. 6.

[11] W.-M. Schulz, M. Spang, A. Wintrich, B. Konig, and S. E. Berberich, "Novel monolithic integrated device with gate resistor for external IGBT clamping leading to enhanced short circuit behavior," in *Proc. 33rd Int. Symp. Power Semiconductor Devices ICs (ISPSD)*, May 2021, pp. 119–122, doi: 10.23919/ISPSD50666.2021.9452211.

[12] M. Beninger-Bina, T. Basler, M. Dainese, and H.-J. Schulze, "A high-voltage transients suppressor diode," in *Proc. 32nd Int. Symp. Power Semiconductor Devices ICs (ISPSD)*, Sep. 2020, pp. 58–61, doi: 10.1109/ISPSD46842.2020.9170169.

[13] E. Canato *et al.*, "ESD-failure of E-mode GaN HEMTs: Role of device geometry and charge trapping," *Microelectron. Rel.*, vols. 100–101, pp. 1–8, Sep. 2019, doi: 10.1016/j.microrel.2019.06.026.

[14] Y. Q. Chen *et al.*, "Degradation behavior and mechanisms of E-mode GaN HEMTs with p-GaN gate under reverse electrostatic discharge stress," *IEEE Trans. Electron Devices*, vol. 67, no. 2, pp. 566–570, Feb. 2020, doi: 10.1109/TED.2019.2959299.

[15] X. B. Xu *et al.*, "Analysis of trap and recovery characteristics based on low-frequency noise for E-Mode GaN HEMTs under electrostatic discharge stress," *IEEE J. Electron Devices Soc.*, vol. 9, pp. 89–95, Nov. 2021, doi: 10.1109/JEDS.2020.3040445.

[16] Y. Xin *et al.*, "Electrostatic discharge (ESD) behavior of p-GaN HEMTs," in *Proc. 32nd Int. Symp. Power Semiconductor Devices ICs (ISPSD)*, Vienna, Austria, Sep. 2020, doi: 10.1109/ISPSD46842.2020.9170063.

[17] *p-GaN HEMT of EPC*. Accessed: Jan. 1, 2021. [Online]. Available: https://epc-co.com/epc/Products/eGaNFETsandICs.aspx

[18] *p-GaN HEMT of GaNSystems*. Accessed: Sep. 1, 2015. [Online]. Available: https://gansystems.com/gan-transistors/

Authorized licensed use limited to: Tsinghua University. Downloaded on February 12,2026 at 06:02:27 UTC from IEEE Xplore. Restrictions apply.