2024 36th International Symposium on Power Semiconductor Devices and ICs (ISPSD) | 979-8-3503-9482-5/24/$31.00 ©2024 IEEE | DOI: 10.1109/ISPSD59661.2024.10579657

# An Integrated Low-power Enhanced Pull-up GaN Driver Using SenseHEMT for Reliable and Fast Short-Circuit Protection

Chun-wang Zhuang[1], Xin Ming[1, 2, 3, *], Zi-kai Ye[1], Yao Qin[1], Xin-ce Gong[1], Yi Lu[1], Si-chao Li[4], Qi Zhou[1,3] and Bo Zhang[1]
[1]State Key Laboratory of Electronic Thin Films and Integrated Devices, University of Electronic Science and Technology of China, Chengdu 611731, China
[2]Shenzhen Institute for Advanced Study, UESTC, Shenzhen 518000, China
[3]Institute of Electronic and Information Engineering of UESTC in Guangdong, Dongguan 523808, China
[4]Hubei Jiufengshan Laboratory, Wuhan 430074, China
Email: mingxin@uestc.edu.cn

***Abstract*—This article proposed an integrated GaN driver with a low-power enhanced pull-up (LPEP) technique to achieve the decoupling between the charging path and the leakage path of the inverter in the driver. Considering the poor short-circuit tolerance of GaN power HEMTs, a low-loss fast short-circuit detection (FSCD) technique using senseHEMT is proposed for reliable and fast short-circuit protection. Experimental results show that the leakage current of the single-stage inverter is 28μA and the rise time of the gate voltage $V_G$ of powerHEMT is 0.71ns. The measured minimum short-circuit response time is 37ns.**

***Keywords*—Monolithic GaN integration, low-power enhanced pull-up (LPEP) technique, short-circuit protection, senseHEMT.***

## I. Introduction

GaN HEMTs have enabled high switching frequency, high efficiency and high power density. Monolithic GaN solutions unlock the full potential of GaN HEMTs due to low parasitic effects [1]. However, the design of GaN-based drivers is challenging due to the lack of suitable p-type devices [2].

As for the structure of a conventional GaN-based inverter shown in Fig. 1(a), two n-type e-mode devices, $E_H$ and $E_L$, are used as the push-pull stage of the inverter. A local bootstrapping of the supply voltage is applied for $E_H$ to achieve rail-to-rail output. When IN is high, $E_H$ is turned off by $E_1$. However, at the same time, the leakage current $I_{leak1}$ flows from $V_{DD}$ to ground through $E_1$, causing power dissipation. Current-limiting resistor $R_{lim}$ is used to minimize $I_{leak1}$, nevertheless, $R_{lim}$ is also in the charging loop of $E_H$. A larger $R_{lim}$ reduces the turn-on speed of $E_H$, which reduces the pull-up capability of the inverter. Art II in Fig. 1(b) replaces $R_{lim}$ with a constant current source, consisting of $R_1$ and an n-type d-mode GaN HEMT, $D_S$. As illustrated in Fig. 1(d), when IN changes from high to low, the trailing of charging current $I_{char1}$ caused by $R_{lim}$ in art I can be solved in art II. Therefore, with the same pull-up capability of the inverter, art II achieves lower power dissipation by reducing leakage current. However, as for art II, there is still a trade-off between $I_{char2}$ and $I_{leak2}$. Leakage current is eliminated in art III by replacing the constant current source in art II with

This work was supported in part by the National Key Research and Development Program of China under Grant 2022YFB3604204, and Guangdong Basic and Applied Basic Research Foundation under Grant 2023A1515012991 and Grant 2021B1515140039.

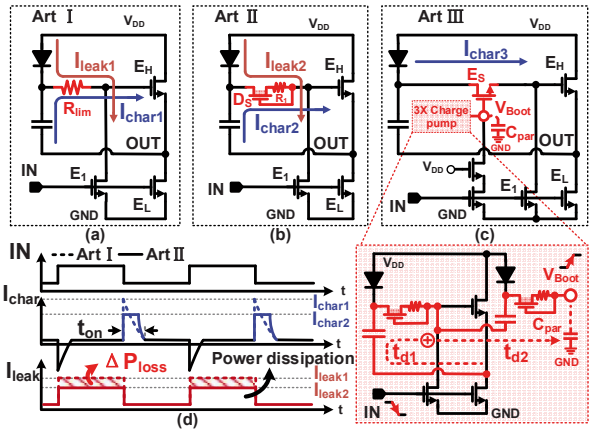


Fig. 1. (a), (b) and (c) Structures of conventional GaN-based inverter. (d) Charging current and leakage current trade-off.

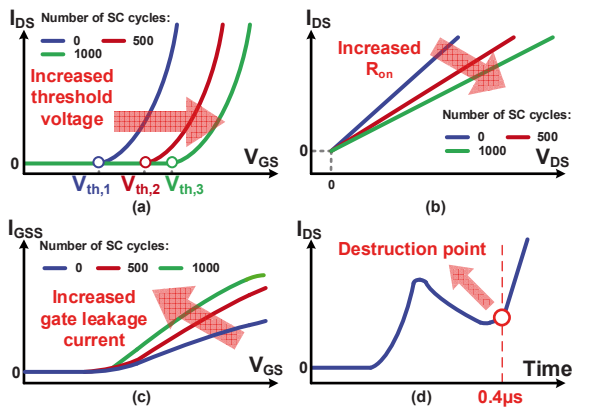


Fig. 2. Degradations of (a) threshold voltage, (b) on-resistance and (c) gate-leakage current after repetitive short-circuit (SC) stress. (d) Waveform for $I_D$ in a destructive test.

the n-type e-mode device $E_S$ [3]. However, a 3X charge pump is required to fully turn on $E_S$, which introduces a delay of $t_{d1}$+$t_{d2}$ in turning on the $E_S$.

Short-circuit (SC) fault may incidentally occur due to the fault of the gate control signal and the failure of load [4]. GaN HEMTs encounter reliability problems after repetitive SC stresses [5][6]. As depicted in Fig. 2(a), (b) and (c), an increase in the number of SC cycles brings about an increase in the threshold voltage $V_{th}$, ON-state resistance $R_{on}$ and gate leakage current $I_{GSS}$. Moreover, Fig. 2(d) demonstrates that the SC withstand time of GaN HEMTs is very short, which is


Authorized licensed use limited to: Tsinghua University. Downloaded on February 12,2026 at 02:26:05 UTC from IEEE Xplore. Restrictions apply.

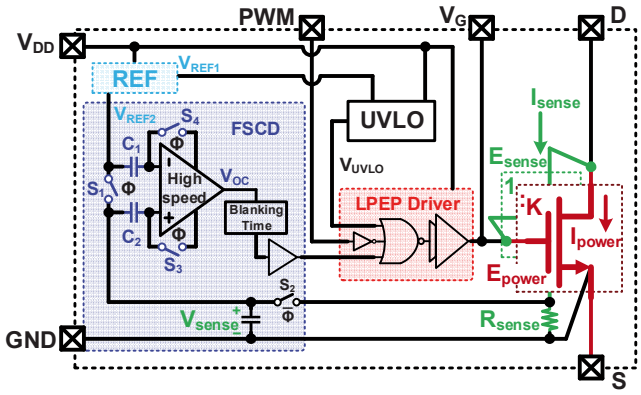


Fig. 3. Architecture of the proposed monolithic GaN driver with low-power and enhanced pull-up capability (LPEP) technique, low-loss sensing, fast short-circuit detection (FSCD), and integrated voltage reference.

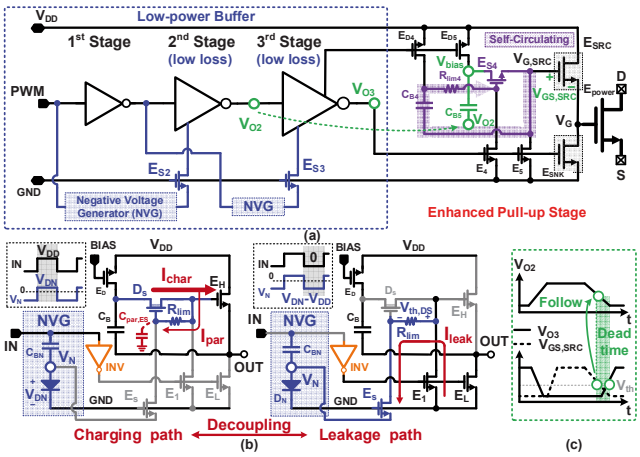


Fig. 4. (a) Architecture of the driver with LPEP technique. (b) Operation of low-loss inverter in low-power buffer. (c) Waveform of dead time between $E_{SRC}$ and $E_{SNK}$.

around 400ns. Therefore, a short-circuit protection (SCP) technology with high-speed response is preferred.

In this work, a GaN-based driver with a low-power and enhanced pull-up capability (LPEP) technique is proposed. SCP utilizing an embedded senseHEMT for reliable and fast sensing is proposed. Moreover, the integrated voltage reference is provided for SCP and undervoltage protection. Concepts of the proposed technique as well as circuit design are discussed in Section II. Experimental results and conclusions are given in Sections III and IV, respectively.

## II. Design of Proposed Structure

The architecture of the proposed monolithic GaN driver is shown in Fig. 3. Low-loss sensing and fast short-circuit detection (FSCD) circuits are integrated to turn off the powerHEMT immediately in the event of an SC fault. The senseHEMT and powerHEMT are in a common-drain configuration for low-loss current sensing. The current sampling resistor $R_{sense}$ is chosen to achieve a small sampling voltage $V_{sense}$, thus avoiding current sampling errors due to the difference in gate-source voltages between senseHEMT and powerHEMT. Considering the low level of $V_{sense}$ and the large device mismatch of GaN technology [1], $C_1$ and $C_2$ are used for input level shifting and input offset storage for the high-speed comparator. The integrated LPEP driver enables strong pull-up capability at low power consumption.

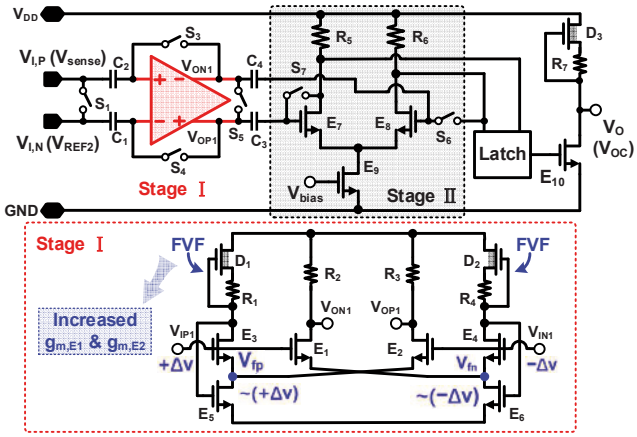


Fig. 5. Circuit schematic of the high-speed comparator in the FSCD.

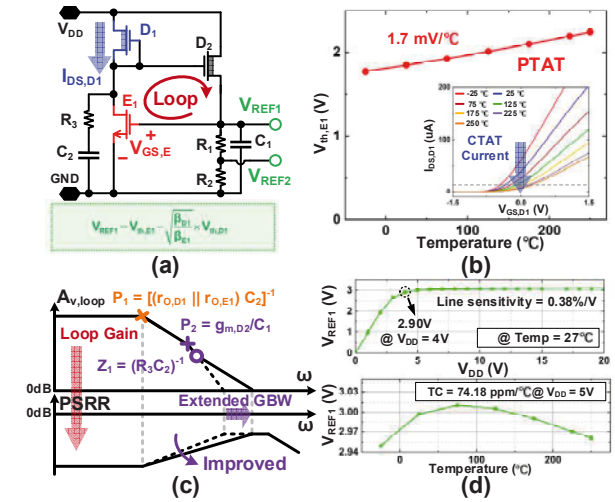


Fig. 6. (a) Circuit schematic of the integrated voltage reference. (b) Threshold voltage of E-mode HEMT versus various temperatures from -25°C to 250°C. The inset is $I_{DS}$-$V_{GS}$ characteristic of D-mode HEMT at temperatures from -25°C to 250°C. (c) Improved high-frequency PSRR. (d) Reference voltage versus supply voltage and temperature.

### A. Proposed LPEP Technique

The LPEP driver consists of a low-power buffer and an enhanced pull-up stage, as shown in Fig. 4(a). The negative voltage generator (NVG) is used to reduce the power consumption of the 2nd and 3rd inverters of the low-power buffer. The self-circulating technique is used in the enhanced pull-up stage to fully turn on $E_{S4}$. When $V_{O3}$ is low, bootstrap capacitor $C_{B4}$ provides the charging charge for $E_{S4}$. Therefore, a 3X charge pump is not required.

The operating principle of the 2nd and 3rd inverters of the low-power buffers is shown in Fig. 4(b). When IN is high, diode $D_N$ is forward bias and $V_N$ is positive. $E_S$ is turned off and no leakage current flows through it. The charging current $I_{char}$ is attenuated by $I_{par}$ due to the parasitic capacitance $C_{par,ES}$, but the attenuation can be compensated by increasing the aspect ratio of $D_S$. When IN is low, $V_N$ is negative and $E_S$ is turned on. The leakage current is diminished to $|V_{th,DS}|/R_{lim}$, and $D_S$ is turned off. Therefore, the charging and leakage paths are decoupled, and the pull-up capability of the inverter can be improved with lower losses.

In the enhanced pull-up stage, the bootstrap capacitor $C_{B6}$ is connected to the output $V_{O2}$ of the 2nd stage inverter of the


Authorized licensed use limited to: Tsinghua University. Downloaded on February 12,2026 at 02:26:05 UTC from IEEE Xplore. Restrictions apply.

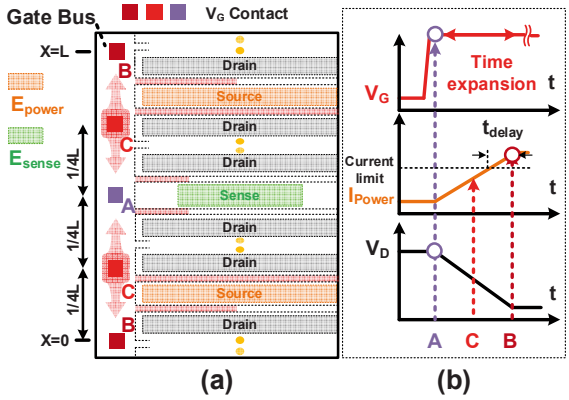


Fig. 7. (a) Layout of contact between the LPEP driver and gate bus of power HEMT & sense HEMT. (b) Effect of contact layout on current sensing.

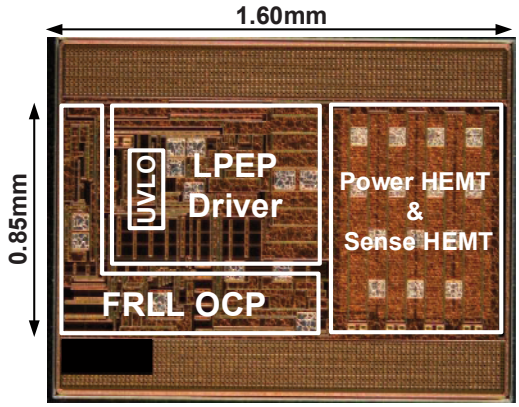


Fig. 8. Chip micrograph.

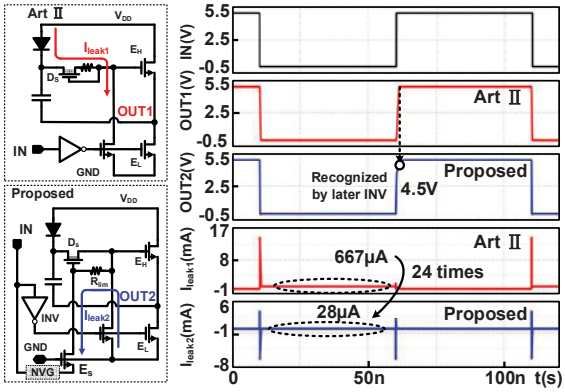


Fig. 9. Comparison of the leakage current of the proposed inverter against art II at the same slew rate of OUT.

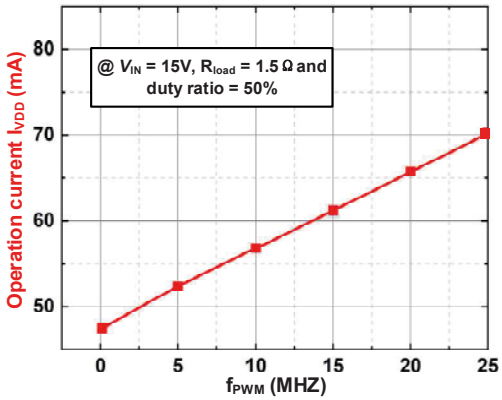


Fig. 10. Measured operation current versus operation frequency $f_{PWM}$.

low-power buffer, and the robust dead time between $E_{SRC}$ and $E_{SNK}$ is achieved. As shown in Fig. 4(c), when $V_{O2}$ drops, $V_{GS,SRC}$ drops in synchronization and $E_{SRC}$ is turned off. At this time, $V_{O3}$ has not yet turned high and $E_{SNK}$ is still off. The aspect ratio of $E_{S4}$ and $E_{SRC}$ are matched, therefore, the rising speed of $V_G$ and $V_{G,SRC}$ are matched for the safe operation of $E_{SRC}$.

### B. High-speed Comparator and Integrated Voltage Reference Design

As shown in Fig. 5, a two-stage amplifier with high bandwidth is used to build up the small $V_{sense}$ change to a sufficiently large value desired by the latch. The flipped voltage follower (FVF) technique is used in the first stage amplifier to increase the transconductance of input transistors $E_1$ and $E_2$. The latch can turn off $E_{10}$ at a high slew rate, and $V_O$ is pulled up by the constant current source consisting of n-type d-mode GaN HEMT $D_3$ and $R_8$ to $V_{DD}$ fast.

The schematic of the integrated voltage reference is shown in Fig. 6(a). As depicted in Fig. 6(b), the threshold voltage $V_{th,E1}$ of the e-mode GaN HEMT $E_1$ is proportional-to-absolute-temperature (PTAT). The current $I_{DS,D1}$ of the d-mode GaN HEMT $D_1$ when $V_{GS,D1}$ is 0 is complementary-to-absolute-temperature (CTAT). As shown in Fig. 6(c), $R_3$ and $C_2$ in Fig. 6(a) are used to improve the high-frequency power supply rejection ratio (PSRR) of the voltage reference. Fig. 6(d) shows that the reference voltage $V_{REF1}$ is 2.9V under the minimum supply voltage of 4V. The line sensitivity is 0.38%/V when $V_{DD}$ ranges from 4 to 20V at 27°C. The temperature coefficient is 74.18ppm/°C when $V_{DD}$ is 5V.

### C. SenseHEMT for Current Sensing

Fig. 7(a) shows three layout schemes for the contact between the LPEP driver and gate bus of powerHEMT & senseHEMT. As shown in Fig. 7(b), considering the time delay of the gate signal transmission on the gate bus, as for contact A, senseHEMT $E_{sense}$ is turned on before powerHEMT $E_{power}$ is fully turned on. At high switching frequency, the dynamic characteristics of the $E_{sense}$ will be degraded by high $V_{GS}$ and $V_{DS}$, causing deviations in current sensing. As for contact B, $E_{sense}$ is turned on after $E_{power}$ is fully turned on. The current may exceed the limit during the turn-on process of $E_{power}$, therefore, the SC response time is increased. Contact C is preferred to achieve reliable and fast current sensing.

## III. Experimental Results and Discussion

The proposed monolithic GaN driver has been fabricated in a 0.25um GaN-on-Silicon process with an active area of 1.60×0.85mm$^2$ in Fig. 8. The comparison of the leakage current of the proposed inverter against art II at the same slew rate of OUT is shown in Fig. 9. With the LPEP technique, the leakage current $I_{leak2}$ of the single-stage inverter is 28μA when the input signal IN is low, which is 24 times lower than the leakage current $I_{leak1}$ of art II. Therefore, the LPEP technique can reduce the static power consumption of the inverter. Fig. 10 illustrates the measured operation current $I_{VDD}$ versus operation frequency $f_{PWM}$ and the measured thermal image of the proposed driver at $V_{IN}$=15V, $R_{load}$=1.5Ω, duty ratio=50% and $f_{PWM}$=10MHz.


Authorized licensed use limited to: Tsinghua University. Downloaded on February 12,2026 at 02:26:05 UTC from IEEE Xplore. Restrictions apply.

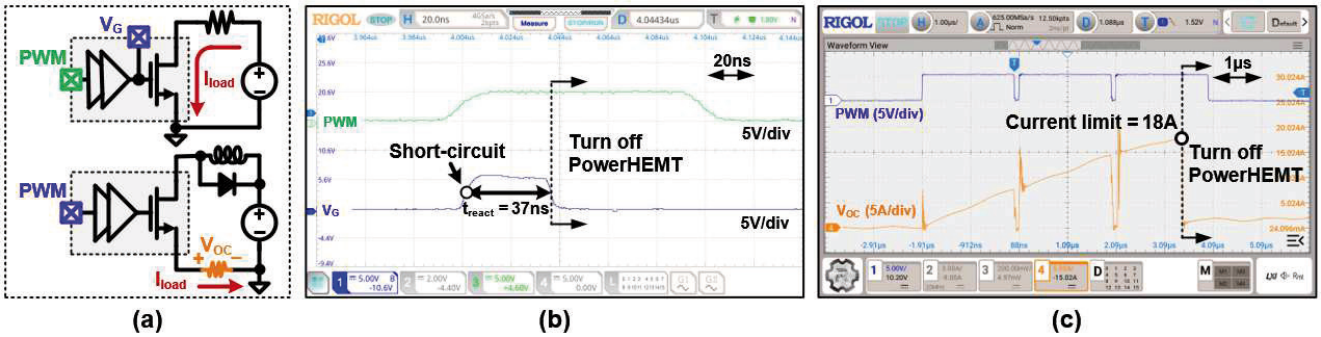


Fig. 11. (a) Schematic circuit for SC response time and current limit test. Measured (b) response time and (c) current limit of the SCP.

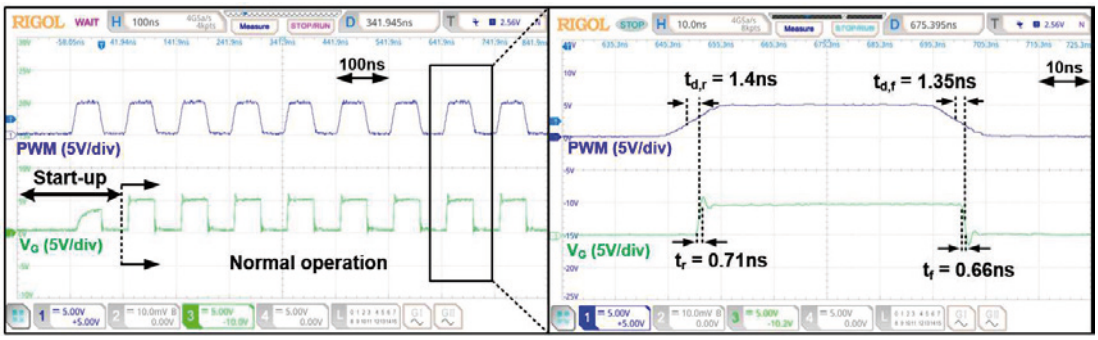


Fig. 12. Measured switching waveform @ $V_{IN}$=15V, $R_{load}$=1.5Ω and $f_{PWM}$=10MHz.

As shown in the top of Fig. 11(a), the load current $I_{load}$ is set to be greater than the current limit of the powerHEMT. Therefore, SC fault occurs immediately when the powerHEMT is turned on. The measured minimum SC response time is 37ns captured in Fig. 11(b). As shown in the bottom of Fig. 11(a), an inductive load is used to make the current $I_{load}$ flowing through the powerHEMT rise slowly. A sampling resistor is used to sample $I_{load}$ and generate voltage $V_{OC}$. As shown in Fig. 11(c), the measured current limit is 18A.

Fig. 12 shows the measured switching waveform of the proposed monolithic driver with resistive load $R_{load}$=1.5Ω at $V_{IN}$=15V and $f_{PWM}$=10MHz. After the first cycle, the bootstrap capacitor of the LPEP driver is fully charged, and the driver starts to operate normally. The rise time and fall time of $V_G$ are 0.71ns and 0.66ns, respectively. The turn-on and turn-off delay of the proposed monolithic driver are 1.40ns and 1.35ns.

## IV. Conclusion

This article proposes a monolithic integrated low-power enhanced pull-up GaN driver using senseHEMT for reliable and fast short-circuit protection. The leakage current of the single-stage inverter in the LPEP driver is reduced to 28μA, which reduces the power consumption of the proposed GaN driver. With the enhanced pull-up stage of the LPEP driver, the rise time of the gate voltage $V_G$ of powerHEMT is 0.71ns. With the FCSD technique, the measured minimum short-circuit response time is 37ns and the current limit is 18A. Moreover, the layout of contact between the LPEP driver and gate bus of powerHEMT & senseHEMT is proposed to achieve reliable and fast current sensing.

## References

[1] M. Kaufmann, and B. Wicht, “A monolithic GaN-IC with integrated control loop for 400-V offline buck operation achieving 95.6% peak efficiency,” IEEE Journal of Solid-State Circuits, vol. 55, no. 12, pp. 3169-3178, 2020.

[2] K. J. Chen, J. Wei, G. Tang, H. Xu, Z. Zheng, L. Zhang, and W. Song, "Planar GaN power integration – the world is flat," in 2020 IEEE International Electron Devices Meeting (IEDM), San Francisco, CA, USA, Dec. 2020, pp. 27.1.1-27.1.4.

[3] T. -W. Wang, Y. -Y. Kao, S. -H. Hung, Y. -H. Wen, T. -H. Yang, and S. -Y. Li et al., “Monolithic GaN-based driver and GaN switch with diode-emulated GaN technique for 50-MHz operation and sub-0.2-ns deadtime control,” IEEE Journal of Solid-State Circuits, vol. 57, no. 12, pp. 3877-3888, 2022.

[4] W. L. Jiang, S. Kadee Murray, M. S. Zaman, H. De Vleeschouwer, P. Moens, J. Roig, and O. Trescases, "An integrated GaN overcurrent protection circuit for power HEMTs using senseHEMT," IEEE Transactions on Power Electronics, vol. 37, no. 8, pp. 9314-9324, 2022.

[5] S. Li, S. Liu, C. Zhang, L. Qian, C. Ge, and S. Xin et al., "Understanding electrical parameter degradations of P-GaN HEMT under repetitive short-circuit stresses," IEEE Transactions on Power Electronics, vol. 36, no. 11, pp. 12173-12176, 2021.

[6] M. Fernández, X. Perpiñà, J. Roig, M. Vellvehi, F. Bauwens, X. Jordà, and M. Tack et al., "P-GaN HEMTs drain and gate current analysis under short-circuit," IEEE Electron Device Letters, vol. 38, no. 4, pp. 505-508, 2017.


Authorized licensed use limited to: Tsinghua University. Downloaded on February 12,2026 at 02:26:05 UTC from IEEE Xplore. Restrictions apply.