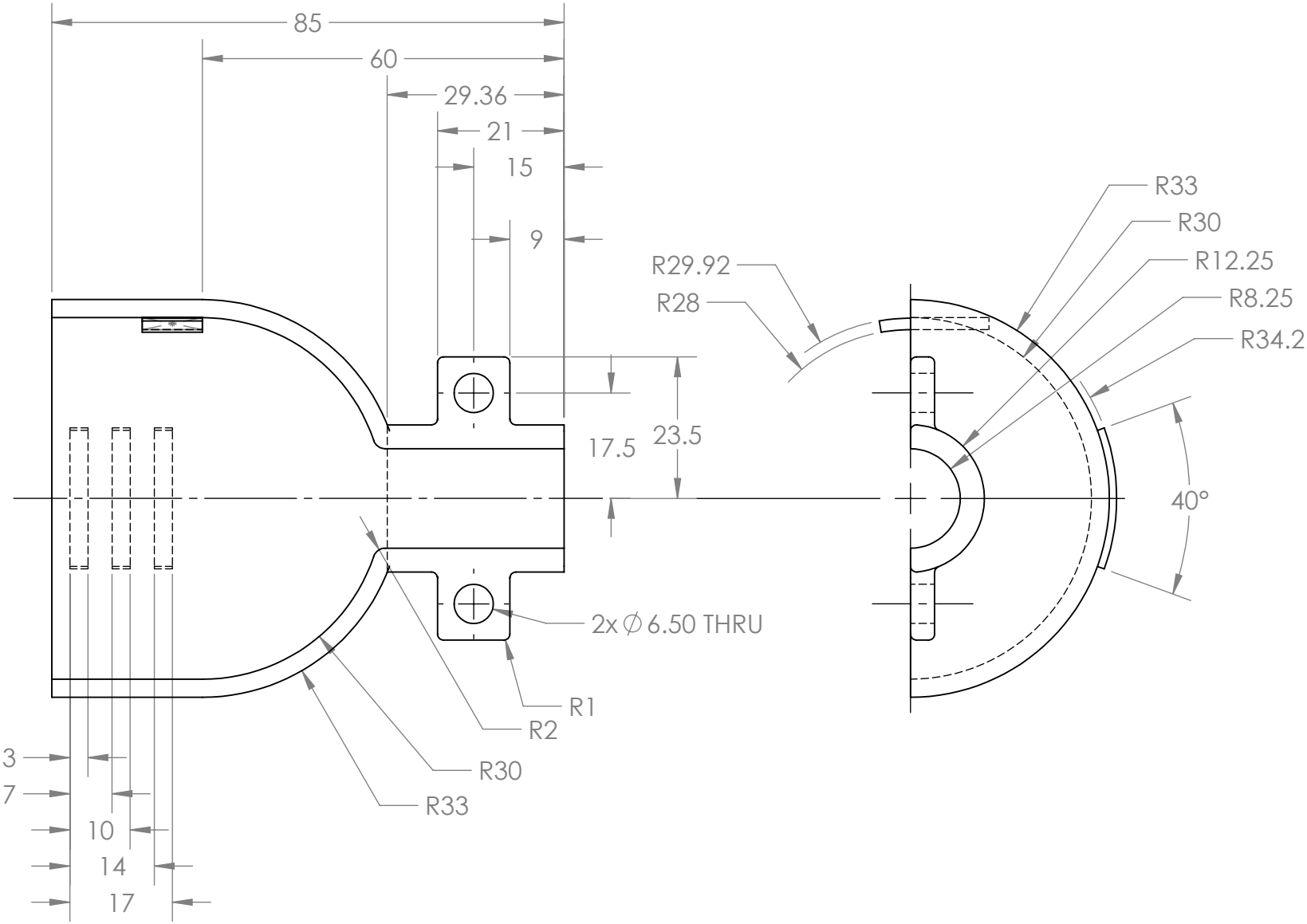

ALL DIMENSIONS +/- 0.2

CONCORDIA FORMULA RACING	WEIGHT (KG) **0.058**	MATERIAL **PLA**		SURFACE ROUGHNESS √6.3	TITLE **STEERING COLUMN GUARD**
		FINISH **0.2 3D Printed**		TOLERANCES ±0.2 ANGLE ± 2.0	
	SURFACE AREA (CM2) **144.98**	DESIGNER **Z.GERMAIN**	ALL DIMENSIONS IN **MM** UNLESS OTHERWISE SPECIFIED		A SIZE / DATE **2023-05-15** / USED ON **CFER22**
		DRAFTER **Z.GERMAIN**	APPROVED	SCALE **1:1**	SHEET **1 / 1** / DWG NO. **XX-A0000** / REV NO. **AA**

SOLIDWORKS Educational Product. For Instructional Use Only.