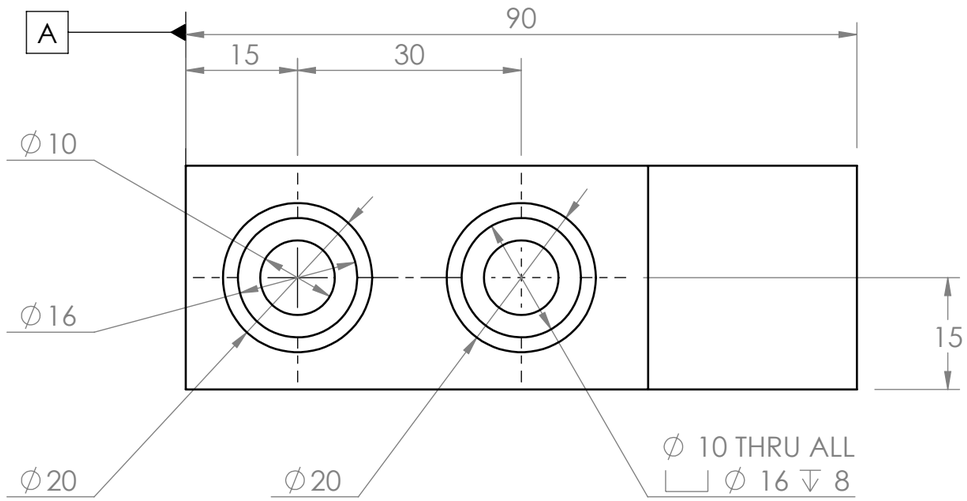

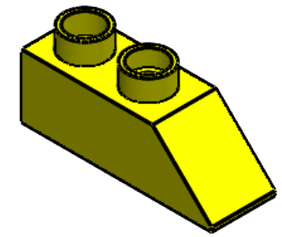

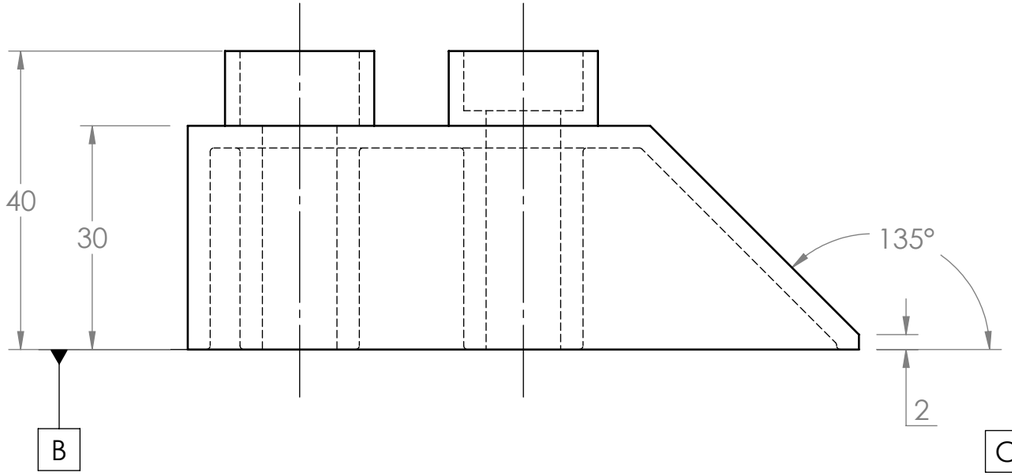

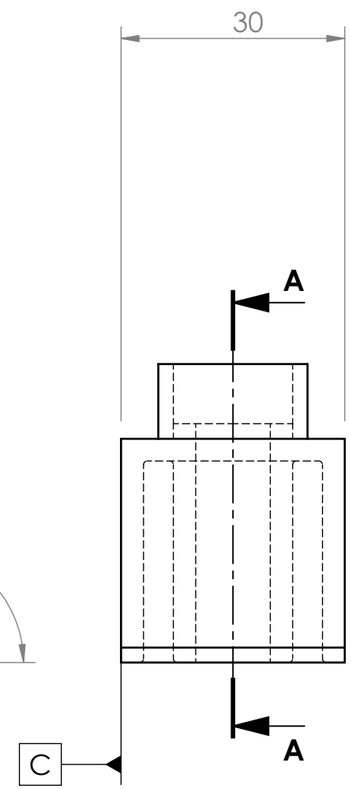

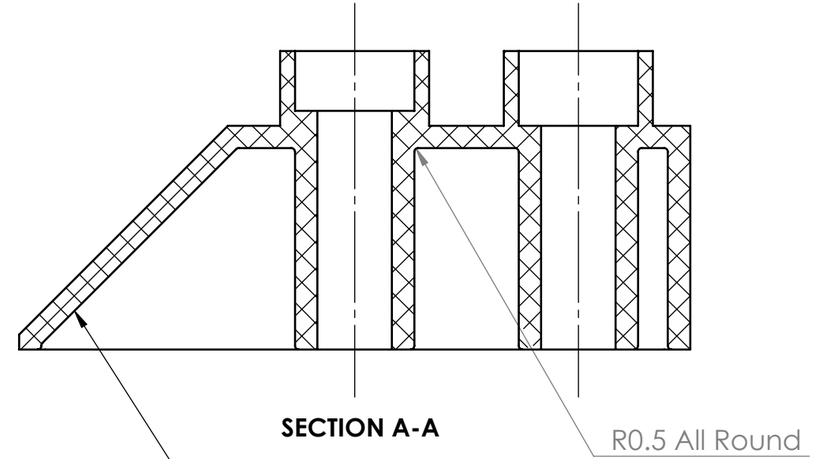

NOTE:
Shell All Internal 3mm

MecE 265 Instructor: **Dr. Nobes F2021** Comments: This is my first assignment in MecE 265, but is Assignment ZERO!	UNLESS OTHERWISE SPECIFIED: DIMENSIONS ARE IN MM TOLERANCES: ANGULAR: ± 0.5° LINEAR X = ± 0.5 X.X = ± 0.1 X.XX = ± 0.025 SURFACE FINISH µm 0.6 DO NOT SCALE DRAWING	DRAWN BY: **David S. Nobes** Lab Day: BOTH SM By: **D.S.Nobes** TA Initials: DSN zacha August 13, 2021 4:01:41 PM June 9, 2016 9:39:47 AM	The Department of Mechanical Engineering UNIVERSITY OF ALBERTA TITLE: The LEGO BRICK
MATERIAL: ABS FILE NAME: LEGO_BRICK_dnobes			SIZE **B** · Assignment Number: Assignment ZERO · REV 1 SCALE: 5:4 · Mass: 32.36 · SHEET 1 OF 1

SOLIDWORKS Educational Product. For Instructional Use Only.