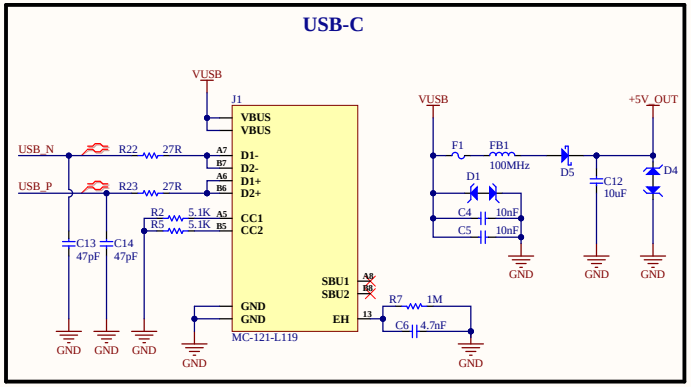

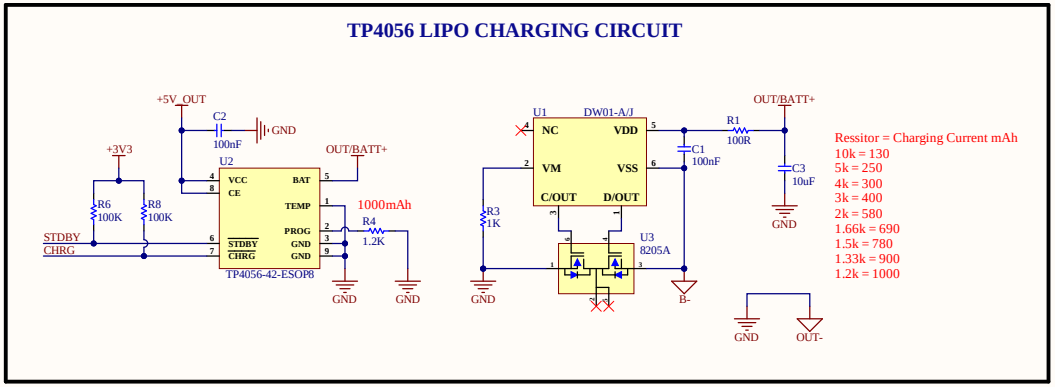

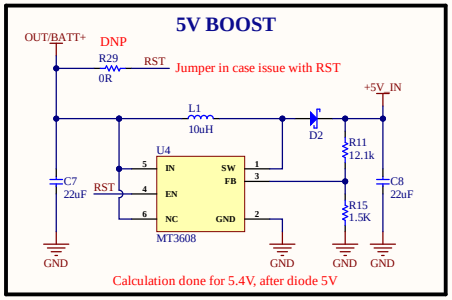

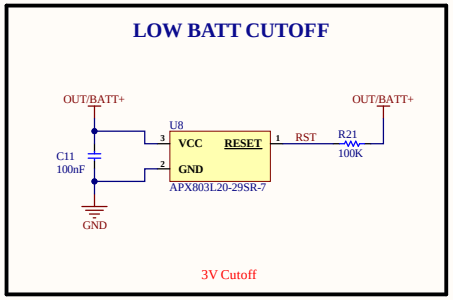

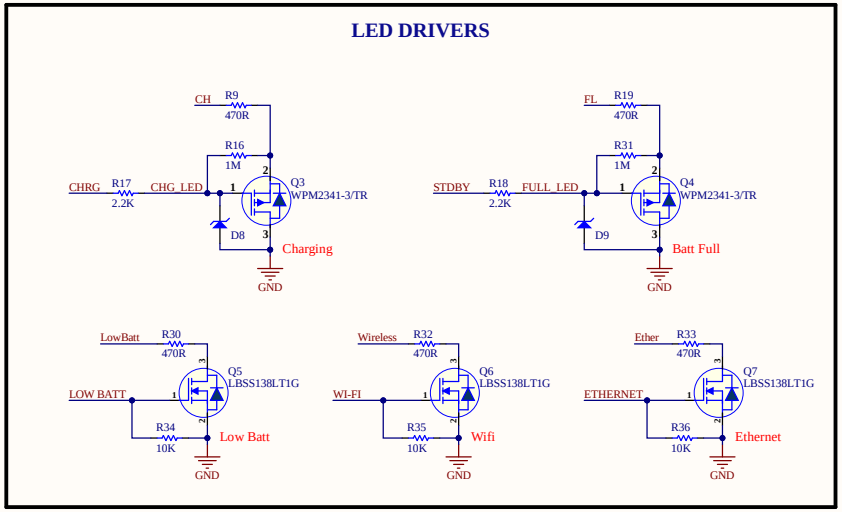

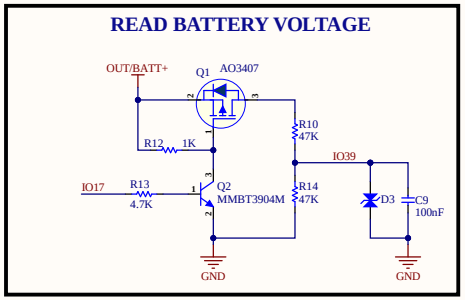

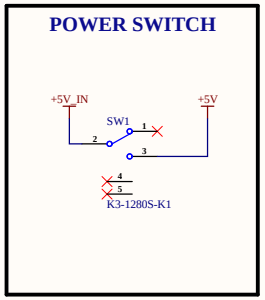

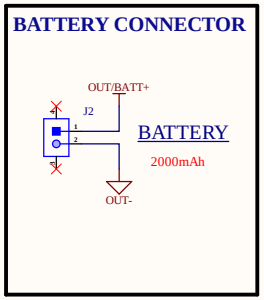

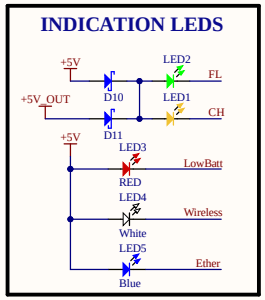

PROJECT	Altium
TITLE	*
SIZE A3	REV
SCALE:	FILE NAME Power_Sheet.SchDoc SHEET 1 OF 2

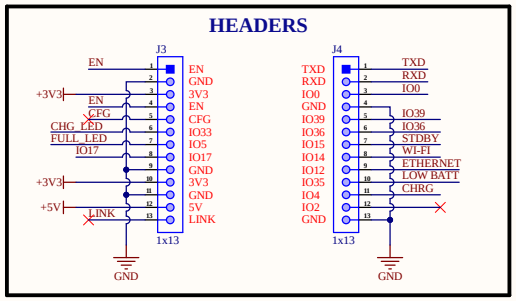

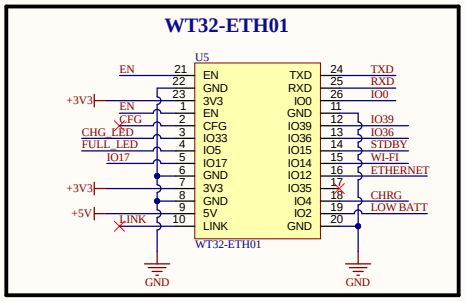

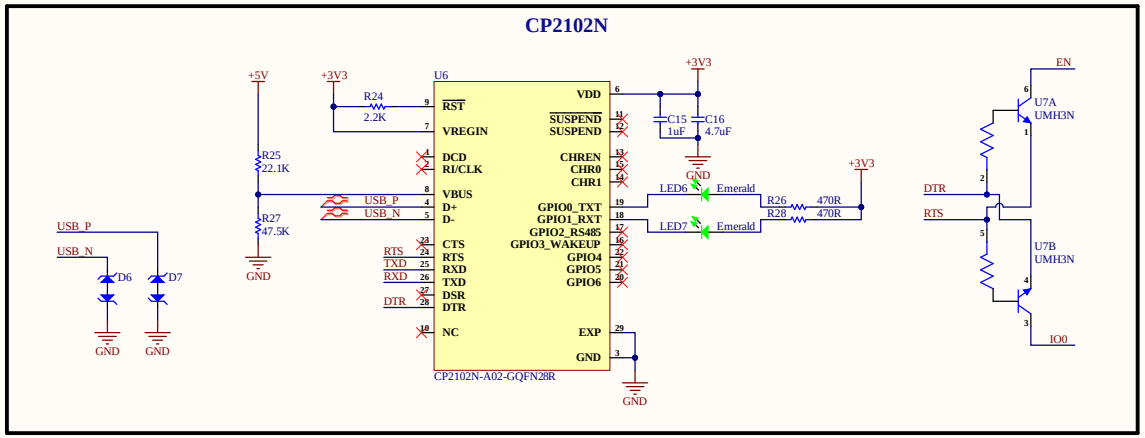

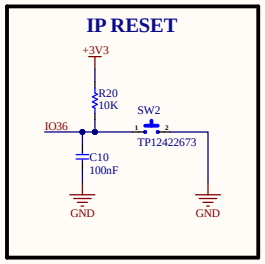

PROJECT	Altium
TITLE	*
SIZE	A3
REV	
SCALE:	
FILE NAME	Controller_Sheet.SchDoc
SHEET	2 OF 2